City of Langford
Delem Drive Sanitary Pumpstation and Intersection Upgrade

Negotiated Request for Proposals No.:	CON26-0191
Date of Issue:	**October 22, 2026**
Proponent Inquiry Deadline:	**November 10, 2026**
Closing Time:	**2:00PM PST**
Closing Date:	**November 19, 2026**
Deliver To:	2nd Floor, 877 Goldstream Avenue Victoria, BC V9B 2X8 Documents to be dropped off to the Engineering front desk. Go to 2nd floor door and ring doorbell to deliver. Engineering front desk (250-474-0068)
Project Representative:	Mike Elliott, ISL Engineering and Land Services

TABLE OF CONTENTS

DEFINITIONS 3
PART 1 – INVITATION AND SUBMISSION INSTRUCTIONS 4
1.1 Invitation to Proponents 4
1.2 Project Representative 5
1.3 Type of Contract for Deliverables 5
1.4 NRFP Timeline 5
1.5 Submission of Proposals 6
PART 2 – EVALUATION PROCESS AND CRITERIA 8
2.1 Evaluation Process 8
2.2 Evaluation Criteria 8
PART 3 – SUBMISSION REQUIREMENTS 10
3.1 Consent of Surety 10
3.2 Submission Form 10
3.3 Experience and Qualifications of Project Team (10 Pages Maximum) 10
3.4 Project Plan and Methodology (6 pages maximum) 11
3.5 Schedule (3 pages max) 12
3.6 Traffic Management Strategy (5 pages max) 12
3.7 Quality Management and Quality Assurance (3 pages maximum) 13
3.8 Proposal Price 13
PART 4 – TERMS AND CONDITIONS OF THE NRFP PROCESS 14
4.1 General Information and Instructions 14
4.2 Communication after Issuance of NRFP 16
4.3 Notification and Debriefing 17
4.4 Conflict of Interest and Prohibited Conduct 17
4.5 Confidential Information 19
4.6 Procurement Process Non-Binding 20
4.7 Governing Law and Interpretation 20
4.8 City Discretion 21

Form of Agreement

NRFP Submittal Form

Supplementary General Conditions

Supplementary Specifications

Additional Documents (documents not bound noted below)

- **A3 –** Technical Memorandum Delem Drive Pump Station Geotechnical Comments on Construction Sequencing dated October 9, 2025 WSP Reference No. CA0051793.7685-004-TM-RevA
- **E1 -** Construction Environmental Management Plan; Delem Drive Sanitary Sewage Pump Station dated May 29, 2026 Waypoint Environmental Services Project No. 25112

DEFINITIONS

Words and phrases used in this *Negotiated Request for Proposal (NRFP)*, appendices, schedules, and/or any addenda are outlined below in Table 1.

TABLE 1

Term	Definition
Addendum or Addenda	Change(s) to this *NRFP* communicated pursuant to this *NRFP*
Agreement	An *Agreement*(s) between the *City* and the *Proponent*(s) for the *Work* identified in this *NRFP* and all attached Appendices and Schedules. Any *Agreement* entered into by the *City* and the *Preferred Proponent* will be as negotiated between the two parties.
City	The City of Langford
Owner	The City of Langford as defined in the MMCD Contract Documents.
Contracting Services	At a minimum, the services described in Schedule 1 of the *Agreement*.
Deliverables	As described in Part 3 of this NRFP.
Evaluation Committee	A committee of *City* personnel and, at the *City's* discretion, one or more third parties who will evaluate the *Proposals*.
MMCD	Master Municipal Construction Documents Association 2019
NRFP	Negotiated Request for *Proposal*.
Place of the Work	As described in MMCD GC 1.53
Preferred Proponent	The *Proponent*, if any, selected by the *City* to negotiate an *Agreement* for the Contracting Services
Project Representative	Mike Elliott, ISL Engineering and Land Services
Proponent	Any legal entity, including a person, company firm, or consortium, which submits a *Proposal*.
Proposal	A *Proponent's* submission pursuant to this *NRFP*.
Proposal Price	As per this *NRFP*
Submission Requirements	Requirements set out in Part 3 that should be included in a *Proposal.*
Work	As per MMCD, GC 1.77.

[End of Definitions]

PART 1 – INVITATION AND SUBMISSION INSTRUCTIONS

1.1 Invitation to Proponents

This NRFP is an invitation by the City to prospective Proponents to submit Proposals for the Delem Drive Sanitary Pumpstation and Intersection Upgrade. The purpose is to obtain one general contractor to complete all the work within the MoTT Right-of-Way.

Site 1: Delem Drive Sewage Pumpstation

West Shore Environmental Services is undertaking this project to install a Sewage Pump Station and associated gravity and forcemain sewage facilities to service the Centre Mountain Business Park. The work generally includes without limitation:

- Excavation, Site Grading and Finishing
- FRP Wet Well with integral Above Ground Chamber
- Pigging Chamber
- Sanitary Sewer Forcemain including Valves and Fitting
- Connection to Gravity Sewer and Sewer Forcemain
- Electrical Kiosk, Electrical Work including BC Hydro Connection

The Work also includes traffic management, environmental protection measures, coordination with utilities and third parties, and all labour, materials, equipment, supervision, and incidental items required to achieve Substantial Performance in accordance with the Contract Documents.

This project will be completed under Ministry of Transportation & Transit Permit #2025-01556.

Site 2: Highway 14 at Delem Drive Intersection Upgrades

The City of Langford is undertaking this project to signalize the intersection and provide improvements to access the future upgrades to Delem Drive and the Centre Mountain Business Park. The Work generally includes, without limitation: site preparation and removals; roadway improvements including median islands, reshaped gravel shoulder, concrete barriers, electrical signals, and pavement markings; drainage ditching, spillways, and riprap outfalls.

The Work also includes traffic management, environmental protection measures, coordination with utilities and third parties, and all labour, materials, equipment, supervision, and incidental items required to achieve Substantial Performance in accordance with the Contract Documents.

This project will be completed under Ministry of Transportation & Transit Permit #2025-02899.

1.2 Project Representative

The Project Representative is the only authorized contact person for the City on behalf of this NRFP. For the purposes of this procurement process, the Project Representative will be:

Mike Elliott, ISL Engineering and Land Services

Please direct all inquiries to melliott@islengineering.com with the subject line "Delem Drive NRFP Questions"

Proponents and their representatives are not permitted to contact any employees, officers, agents, elected officials or other representatives of the City, concerning matters regarding this NRFP. Failure to adhere to this rule may result in the disqualification of the Proponent and the rejection of the Proposal.

1.3 Type of Contract for Deliverables

The Preferred Proponent will be requested to enter into direct contract negotiations to finalize an Agreement with the City for the provision of the Deliverables. The terms and conditions found in the Form of Agreement (Appendix A) are to form the basis for commencing negotiations between the City and the Preferred Proponent. The *Proponent* must consider each of the documents outlined in the "Schedule of Contract Documents" contained in the *MMCD* Agreement (Schedule 1 of Appendix A) when preparing their *Proposal*. It is the *City's* intention to enter into an *Agreement* with only one (1) legal entity for both projects.

If the Preferred Proponent and the City are not able to successfully negotiate, the City reserves the right to enter negotiations with other qualified Proponents.

1.4 NRFP Timeline

The NRFP timeline shown in Table 2 is tentative only and may be changed by the City at any time.

TABLE 2

Date of Issue of NRFP:	October 22, 2026
Proponent Inquiry Deadline:	November 10, 2026 at 2:00 PM PST
Deadline for Issuing Addenda:	November 16, 2026
Closing Date:	November 19, 2026
Selection of Preferred Proponent(s):	December 10, 2026
Anticipated Execution of Agreement:	December 23, 2026

1.5 Submission of Proposals

1.6.1 GENERAL

Before submitting Proposals, Proponents must satisfy themselves about the nature and location of the work, local conditions, the professional services, equipment, technology and facilities needed for the execution of the work, and all other factors that might have a bearing on their Proposal. Proponents are fully responsible for obtaining all information required for the preparation of Proposals and the execution of the work.

1.6.2 LOCATION

Proposals must be delivered in person or by courier to the City of Langford Engineering department marked as follows:

ATTENTION: **Trevor Auger**, 2nd Floor, 877 Goldstream Avenue Victoria, BC V9B 2X8

REGARDING: NRFP # CON26-0191 Delem Drive Sanitary Pumpstation and Intersection Upgrade

Documents to be dropped off to the Engineering front desk. Go to 2nd floor door and ring doorbell to deliver. Engineering front desk (250-474-0068).

1.6.3 PROPOSALS TO BE SUBMITTED ON TIME

Proposals must be submitted at the location set out above on or before the Closing Date and Closing Time. Proposals submitted after the Closing Date and Closing Time will be rejected.

1.6.4 PROPOSALS TO BE SUBMITTED IN PRESCRIBED FORMAT

Proponents should follow the Proposal criteria as described in Part 2 – Evaluation Process and Criteria. A description of the Proposal criteria can be found in Part 3 – Submission Requirements. Proponents must submit four (4) complete hard copies and one digital (USB key) copy containing the proposal in .pdf format of both Envelope A and Envelope B. Envelope A and Envelope B are to be submitted on separate USB Keys and in separate sealed envelopes. The contents of each envelope are described in Table 3.

TABLE 3

ENVELOPE A	Envelope B
Submission Form	Pricing
Relevant Experience	
Project Plan	
Project Team	

Proponents who do not submit the Proposed Price in a separate envelope may be disqualified at the City's discretion.

1.6.5 WITHDRAWAL OF PROPOSALS

At any time throughout the NRFP process until the execution of a written agreement for provision of the Deliverables, a Proponent may withdraw a submitted Proposal. To withdraw a Proposal a notice of withdrawal must be sent to the Project Representative and must be signed by an authorized representative of the Proponent.

[End of Part 1]

PART 2 – EVALUATION PROCESS AND CRITERIA

The City will conduct the evaluation of Proposals and negotiations based on the following.

2.1 Evaluation Process

a) The City, in its absolute and sole discretion, and according to its own judgment of its best interest, having regard for the greatest value that can be obtained on overall quality, service, and price, reserves the full right to reject any or all Proposals or alternative Proposals for any reason whatsoever and continue its evaluation of one or more of the other Proposals.

b) The City retains a separate right to waive irregularities of a minor or technical nature. This right does not, in any way, waive the requirement of the Proponents to submit a Proposal in proper form as required by the NRFP.

c) The City may utilize the input and opinions of any third parties as it is deemed appropriate in its absolute discretion to assist the City in its evaluation of the Proposal.

d) Throughout the evaluation of the Proposals, the City, in its sole discretion, may request additional written clarifications and or supplemental information from selected Proponents, as it deems appropriate, to more thoroughly evaluate the Proposals.

2.2 Evaluation Criteria

a) The evaluation team will review and score criteria below.

b) Individual Proponent scores will be multiplied against the maximum point value for each point criterion outlined in Table 4.

TABLE 4

Criterion (#)	Rated Criteria Category	Max Point Value	Minimum Threshold
3.2	Submission Form	Pass/Fail	Pass
3.3	Experience and Qualifications of Project Team	15	45 out of 60
3.4	Project Plan and Methodology	20	
3.5	Schedule	10	
3.6	Traffic Management Strategy	10	
3.7	Quality Management and Quality Assurance	5	
3.8	Pricing	40	No minimum
	Total Points	100	

c) Minimum threshold must be met prior to proceeding to the Pricing evaluation stage.

d) The individual criterion score for the Proposal Price will be based on the following formula:

$$\text{Score} = \frac{\text{Low Proposal Price}}{\text{Submission Proposal Price}} \text{ x Maximum Point Value for Proposal Price}$$

e) The Proponent that has the highest overall score will be noted as the Preferred Proponent and may be asked to enter into negotiations with the City. The decision of the City in all matters relating to the evaluation of a Proposal will be final.

f) The MMCD Agreement between Owner and Proponent attached as Appendix "A" of this NRFP will form the basis of a negotiated Agreement between the City and the Preferred Proponent.

g) In the event that a single Proposal is received, the City reserves the unfettered right to determine the next step, which may include but not be limited to collapsing or re-issuing this NRFP, negotiate with the sole Proponent, or pursue a different selection process altogether.

[End of Part 2]

PART 3 – SUBMISSION REQUIREMENTS

This section outlines the information the Proponent is to provide in its Proposal. The Proponent's Proposal submission should be organized as outlined below. This structure will facilitate the City's evaluation.

Failure to provide all the information may result in the City deciding to exclude the Proposal from the evaluation process.

3.1 Consent of Surety

A pre-condition of award also includes the following documents:

TABLE 5

DELIVERABLE	TIMING
Proof of Insurance	Prior to Award of Contract
Proof of Bonding	Prior to Award of Contract

3.2 Submission Form

Complete and include in the Proposal all information in Appendix B – Submission Form signed by an authorized representative of the Proponent.

3.3 Experience and Qualifications of Project Team (10 Pages Maximum)

1. Provide a description of the corporate knowledge, skills and experience relevant to the Work.
2. Identify the proposed Project Manager and Superintendent(s). Outline the relevant experience of the proposed individuals and include resumes for each.
3. List any Subcontractors being proposed excluding the quality management subcontractors. For each, identify the proposed parts of the Work the Subcontractor is performing, the number of years of experience of the Subcontractor and the number of years the Proponent has worked with the Subcontractor.
4. A summary of six (3 for MoTT Intersections and 3 pumpstations/forcemain) relevant projects performed by the proposed team completed in the past five years with a similar value and scope to the proposed work which includes:
    a. Why the project is relevant (MoTT and West Shore Environmental Services experience considered an asset);
    b. Identify the personnel involved (reference sub-contractors if same for this team) and outline how they contributed to the success of the project; and
    c. A reference for each project (name, position, and contact information) which the City may contact and use as part of the evaluation score.

3.4 Project Plan and Methodology (6 pages maximum)

1. Describe the project and include statements of what tasks are to be undertaken to demonstrate an understanding of the Work.
2. Provide a definitive synopsis of the Work and approach that will be taken to complete this project that includes all major Work items that are required throughout the project. The project plan should be developed around fulfilling the City's requirements within the known project constraints, requirements, and expectations. The proposed project plan should describe how the Proponent will meet the City's needs as set forth in the RFP to deliver maximum value to the City.
3. Describe how the proposed project plan, and proposed project team will support the City in meetings their project goals.
    a. A clear description of proposed construction staging and sequencing, including how the Work will be phased to maintain site operations and public access where required.
    b. Identification of proposed material laydown areas, equipment storage locations, and site office facilities, including how these areas will be secured and managed.
    c. A communication plan outlining how the Proponent will coordinate with the City, Contract Administrator, emergency services, transit providers, adjacent residents, businesses, and other stakeholders.
    d. Environmental protection measures, including erosion and sediment control, spill response, and compliance with applicable regulations.
    e. Health and safety procedures, quality assurance and quality control (QA/QC) programs, inspection processes, and defined hold points for critical work activities.

Each Proponent should provide details for construction timelines, showing milestones including all stages of construction and underground infrastructure installation to meet the contractual Substantial Performance date outlined in the Form of Agreement (Appendix A).

Proponent to provide details of any innovations, processes or systems to be used to ensure compliance with schedules and budgets for the project.

3.5 Schedule (3 pages max)

1. Provide a realistic schedule which details key work phases that includes:
    a. Critical path items and milestones including submissions to MoTT and WSES;
    b. Staging and sequencing with specific reference to starting and completing the separate projects while minimizing traffic impacts;
    c. Each activity shall have the resource identified including separate crews and subcontractors;
    d. Identify long lead
    e. Each group of activities shall reference back to the traffic control set-up with consideration for various users such as emergency services, businesses, residents, pedestrians/cyclists, those with mobility challenges, trucks, and tourism;
    f. Detailed schedule with minimum impact to operations, businesses, residences;
    g. Communication with stakeholders such as the City's Contract Administrator, emergency services, residents, and businesses;
    h. Identification of the primary schedule risks (minimum 3) associated with this project, along with detailed, proactive mitigation strategies to ensure achievement of the required Substantial Performance date.
    i. Site access, access management, security and traffic control; and
    j. Substantial Completion date of October 15, 2027.

Schedules which show a strong, well-defined plan to have all the work impacting the vehicle right-of-way, including the finished top paving, within the seasonal night work window will receive higher points.

The Proponent must also explain how any schedule acceleration or recovery measures will be implemented without compromising quality, safety, environmental compliance, or the long-term durability and performance of the Work.

3.6 Traffic Management Strategy (5 pages max)

1. Demonstrate the approach of the traffic management plan for the main part of the project which impacts the Highway 14 which is under the Ministry's jurisdiction.
2. Describe the process and timing for traffic management plan submissions to the Ministry.
3. Demonstrate the approach to maintaining a lane of traffic in each direction with a speed limit of 60km/hr for all daytime activities. Identify activities that require further speed reductions and or single lane alternating which must be completed at night.
4. It is intended that the pumpstation and forcemain will be completed to a suitable level before completing the intersection works such that impacts are limited to Highway 14 such that there is only one major traffic set up. Identify this milestone in the schedule and how the contractor will communicate this to the travelling public.
5. Describe the approach to communications with respect to the contract administration team, MoTT, The City of Langford and the travelling public including nearby residents and businesses.
6. Describe how the TMP will accommodate risks to the schedule and promote the timely completion of work elements such that areas can be returned to finished condition as soon as possible.

3.7 Quality Management and Quality Assurance (3 pages maximum)

1. Demonstrate the approach to project management and highlight the procedures to be utilized to ensure activities are completed and delivered on time and on budget.
2. Provide a description of an internal quality assurance and control program in place, including the communication plan for dealing with Contract Administrator, Inspector and Owner specifically highlighting how submissions will be tracked.
3. List the quality management subcontractors proposed for Material Testing, Soils Planning/Disposal and Construction Environmental Management Plan. For each, identify the proposed parts of the Work the Subcontractor is performing, the number of years of experience of the Subcontractor and the number of years the Proponent has worked with the Subcontractor.

3.8 Proposal Price

Proposal Price is to be submitted as a separate document by completing the MMCD Schedule of Quantities and Prices which is provided with this RFP as a separate document.

Important Notes

Rates must be provided in Canadian funds, inclusive of all applicable duties and taxes except for GST and PST, which should be itemized separately.

Rates quoted by the Proponent must be all-inclusive and must include all labour, equipment and material costs included in or required for the Work, including all items which, while not specifically listed in the Schedule of Quantities and Prices, are included in the Work specifically or by necessary inference from the Contract Documents.

Rates quoted by the Proponent must be all-inclusive and must include all travel and carriage costs, all insurance costs, CPP and all employee benefits and the Workers Compensation Act, all costs of delivery, all costs of installation and set-up, including any pre-delivery inspection charges, and all other overhead, including any fees or other charges required by law.

[End of Part 3]

PART 4 – TERMS AND CONDITIONS OF THE NRFP PROCESS

4.1 General Information and Instructions

4.1.1 PROPONENTS TO FOLLOW INSTRUCTIONS

Proponents should structure their Proposals in accordance with the instructions in this NRFP. Where information is requested in this NRFP, any response made in a Proposal should reference the applicable section numbers of this NRFP.

Proposals should clearly identify the Proponent and whether it is an individual, a corporation, a partnership, or a consortium, including the legal entity that will execute an Agreement.

4.1.2 PROPOSALS IN ENGLISH

All Proposals are to be in English only.

4.1.3 NO INCORPORATION BY REFERENCE

The entire content of the Proponent's Proposal should be submitted in a fixed form, and the content of websites or other external documents referred to in the Proponent's Proposal but not attached will not be considered to form part of its Proposal.

4.1.4 PAST PERFORMANCE OR PAST CONDUCT

In the evaluation process, the City may consider the Proponent's past performance or conduct on previous contracts with the City or other institutions that may not be referenced in the Proponent's Proposal.

The City may prohibit a supplier from participating in a procurement process based on past performance or based on inappropriate conduct in a prior procurement process, including but not limited to the following:

(a) illegal or unethical conduct;

(b) the refusal of the supplier to honour its submitted pricing or other commitments; or

(c) any conduct, situation or circumstance determined by the City, in its sole and absolute discretion, to have constituted an undisclosed Conflict of Interest.

4.1.5 INFORMATION IN NRFP ONLY AN ESTIMATE

The City and its advisers make no representation, warranty or guarantee as to the accuracy of the information contained in this NRFP or issued by way of Addenda. Any quantities shown, or data contained in this NRFP or provided by way of Addenda are estimates only and are for the sole purpose of indicating to Proponents the general scale and scope of the Deliverables. It is the Proponent's responsibility to obtain all the information necessary to prepare a Proposal in response to this NRFP.

4.1.6 PROPONENTS TO BEAR THEIR OWN COSTS AND RISKS

The Proponent will bear all costs associated with or incurred in the preparation and presentation of its Proposal, including, if applicable, costs incurred for interviews or demonstrations.

The Proponent, either personally or through a representative, is responsible to examine the Place of the Work before submitting a Proposal. A Proponent has full responsibility to be familiar with and make allowance in the Proposal for all conditions at the Place of the Work that might affect the Proposal, including any information regarding subsurface soil conditions made available by the City, the location of the Work, local conditions, topographical soil conditions, weather and access. Unless otherwise specified in the Contract Documents, a Proponent is not required to do subsurface investigations. By submitting a Proposal, a Proponent represents that the Proponent has examined the Place of the Work, or specifically elected not to. It is intended in the Contract that results from this NRFP process will include a provision stating that no additional payments or time extensions will be claimable or due because of difficulties relating to conditions at the Place of the Work which were reasonably foreseeable by a Proponent qualified to undertake the Work.

Any Proponent, or other party, by responding to this NRFP will be solely responsible for its own expenses and bears the sole risk and liability for any expense, damage, loss, or liability incurred by it, including loss of opportunity and loss of profits or potential profits, in connection with its consideration of and response to this NRFP. By submitting a Proposal, the Proponent absolutely waives any right, or cause of action against the City, its officers, directors, employees, or agents by reason of the City's failure to accept the Proposal submitted by the Proponent, whether such right or cause of action arises in contract, negligence, bad faith, or otherwise.

4.1.7 PROPOSAL TO BE RETAINED BY THE CITY

All Proposals submitted, other than any Proposal withdrawn prior to the Closing Date or any late Proposals, become the property of the City and will not be returned to the Proponents.

The Proponent acknowledges and agrees that the submission of the Proposal documents by the Proponent is subject to the Freedom of Information and Protection of Privacy Act and, as such, the City may be required to disclose any or all of the contents of the Proposal package under such Act.

4.1.8 NO GUARANTEE OF VOLUME OF WORK OR EXCLUSIVITY OF CONTRACT

The City makes no guarantee of the value or volume of Work to be assigned to the Preferred Proponent(s). The Agreement to be negotiated with the Preferred Proponent(s) will not be an exclusive contract for the provision of the described Deliverables. The City may contract with others for goods and services the same as or similar to the Deliverables or may obtain such goods and services internally.

4.1.9 PROPONENTS TO PROVIDE TRUTHFUL AND ACCURATE INFORMATION

The Proponent has provided truthful and accurate information in this Proposal. If the City determines that any of the information provided within the Proposal is inaccurate or otherwise provided falsely, the Proponent may be disqualified from this procurement process and may be deemed ineligible for future City procurements.

4.1.10 CONTRACT DRAWINGS

An electronic version of the Contract Drawings will be made available to the Proponent prior to construction. The City provides this information to the Proponent based on the provision that neither the City nor the Engineering Consultant assume any responsibility for the accuracy and completeness of any electronic information contained within an electronic version of the Contract Drawings.

4.2 Communication after Issuance of NRFP

4.2.1 PROPONENTS TO REVIEW NRFP

Proponents should promptly examine all the documents comprising this NRFP and may direct questions or seek additional information in writing by email to the Project Representative on or before Proponent Inquiry Deadline per Table 2. No such communications are to be directed to anyone other than the Project Representative. The City is under no obligation to provide additional information, and the City is not responsible for any information provided by or obtained from any source other than the Project Representative. It is the responsibility of the proponent to seek clarification from the Project Representative on any matter it considers to be unclear. The City is not responsible for any misunderstanding on the part of the proponent concerning this NRFP or its process. Information about this NRFP from any other source is not official and should not be relied on. Inquiries and responses may be recorded and may, at the City's discretion, be retained in confidence or distributed to all other Proponents.

4.2.2 ALL NEW INFORMATION TO PROPONENTS BY WAY OF ADDENDA

This NRFP may be amended only by Addendum in accordance with this section. If the City, for any reason, determines that it is necessary to provide additional information relating to this NRFP, such information will be communicated to all Proponents by Addendum. Each Addendum forms an integral part of this NRFP and may contain important information, including significant changes to this NRFP. Proponents are responsible for obtaining all addenda issued by the City. In the Submission Form (Appendix B), Proponents should confirm their receipt of all addenda by setting out the number of each Addendum in the space provided.

It is the sole responsibility of the Proponent to check with the City representative for any updated information and Addenda issued before the closing date. The City shall not be held responsible for our competitive NRFP documents that are located on any other website.

4.2.3 POST-DEADLINE ADDENDA AND EXTENSION OF SUBMISSION DEADLINE

If the City determines that it is necessary to issue an Addendum after the Deadline for Issuing Addenda, the City may extend the Closing Date and Closing Time for a reasonable period of time.

4.2.4 VERIFY, CLARIFY AND SUPPLEMENT

When evaluating Proposals, the City may request further information from the Proponent or third parties in order to verify, clarify or supplement the information provided in the Proponent's Proposal, including but not limited to clarification with respect to whether a Proposal meets the submission requirements set out in this NRFP. The City may revisit, re-evaluate and rescore the Proponent's response or ranking on the basis of any such information.

4.2.5 REFERENCE INFORMATION

Unless otherwise expressly specified by the City, any additional information ("Reference Information") made available by the City or Project Representative to Proponents prior to the Proposal Closing Time and Proposal Closing Date such as geotechnical reports or as-built plans, is not intended to be included as part of the Contract Documents. Such additional information is made available only for the assistance of Proponents who are to make their own judgment about its reliability, accuracy, completeness and relevance to the Contract, and neither the City nor Project Representative gives any guarantee or representation that the additional information is reliable, accurate, complete or relevant.

4.3 Notification and Debriefing

4.3.1 NOTIFICATION TO OTHER PROPONENTS

Once an Agreement is executed by the City and the Preferred Proponent(s), the other Proponents may be notified directly in writing and will be notified by public posting in the same manner that this NRFP was originally posted of the outcome of the procurement process.

4.3.2 DEBRIEFING

Proponents may request a debriefing after receipt of a notification of the outcome of the procurement process. All requests must be in writing to the Project Representative and must be made within thirty (30) days of such notification.

4.3.3 PROCUREMENT PROTEST PROCEDURE

If a Proponent wishes to challenge the NRFP process, it must provide written notice to the City Representative. The notice must provide a detailed explanation of the Proponent's concerns with the procurement process or its outcome. Any dispute arising from this NRFP, or subsequent agreement, will be resolved according to the laws of the Province of British Columbia.

4.4 Conflict of Interest and Prohibited Conduct

4.4.1 CONFLICT OF INTEREST

For the purposes of this NRFP, the term "Conflict of Interest" includes, but is not limited to, any situation or circumstance where:

(a) in relation to the NRFP process, the Proponent has an unfair advantage or engages in conduct, directly or indirectly, that may give it an unfair advantage, including but not limited to (i) having, or having access to, confidential information of the City in the preparation of its Proposal that is not available to other Proponents, (ii) communicating with any person with a view to influencing preferred treatment in the NRFP process (including but not limited to the lobbying of decision makers involved in the NRFP process), or (iii) engaging in conduct that compromises, or could be seen to compromise, the integrity of the open and competitive NRFP process or render that process non-competitive or unfair; or

(b) in relation to the performance of its contractual obligations under a contract for the Deliverables, the Proponent's other commitments, relationships or financial interests (i) could, or could be seen to, exercise an improper influence over the objective, unbiased and impartial exercise of its independent judgement, or (ii) could, or could be seen to, compromise, impair or be incompatible with the effective performance of its contractual obligations.

4.4.2 DISQUALIFICATION FOR CONFLICT OF INTEREST

The City will disqualify a Proponent for any conduct, situation or circumstances, determined by the City, in its sole and absolute discretion, to constitute a Conflict of Interest as defined above.

4.4.3 DISQUALIFICATION FOR PROHIBITED CONDUCT

The City will disqualify a Proponent, rescind an invitation to negotiate or terminate a contract subsequently entered into if the City determines that the proponent has engaged in any conduct prohibited by this NRFP.

4.4.4 PROHIBITED PROPONENT COMMUNICATIONS

Proponents must not engage in any communications that could constitute a Conflict of Interest and should take note of the Conflict of Interest declaration set out in the Submission Form (Appendix B).

4.4.5 PROPONENT NOT TO COMMUNICATE WITH MEDIA

Proponents must not at any time directly or indirectly communicate with the media in relation to this NRFP or any Agreement entered into pursuant to this NRFP without first obtaining the written permission of the Project Representative.

4.4.6 NO LOBBYING

Proponents must not, in relation to this NRFP or the evaluation and selection process, engage directly or indirectly in any form of political or other lobbying whatsoever to influence the selection of the Preferred Proponent(s).

4.4.7 ILLEGAL OR UNETHICAL CONDUCT

Proponents must not engage in any illegal business practices, including activities such as bid-rigging, price-fixing, bribery, fraud, coercion or collusion. Proponents must not engage in any unethical conduct, including lobbying, as described above, or other inappropriate communications; offering gifts to any employees, officers, agents, elected officials or other representatives of the City; deceitfulness; submitting proposals containing misrepresentations or other misleading or inaccurate information; or any other conduct that compromises or may be seen to compromise the competitive process provided for in this NRFP. Failure to comply with this requirement will result in the City no longer considering the Proposal.

4.5 Confidential Information

4.5.1 CONFIDENTIAL INFORMATION OF THE CITY

All information provided by or obtained from the City in any form in connection with this NRFP either before or after the issuance of this NRFP

(a) is the sole property of the City and must be treated as confidential;

(b) is not to be used for any purpose other than replying to this NRFP and the performance of any subsequent contract for the Deliverables;

(c) must not be disclosed without prior written authorization from the City; and

(d) must be returned by the Proponent to the City immediately upon the request of the City.

4.5.2 CONFIDENTIAL INFORMATION OF PROPONENT

A Proponent should identify any information in its Proposal or any accompanying documentation supplied in confidence for which confidentiality is to be maintained by the City. The confidentiality of such information will be maintained by the City, except as otherwise required by law or by order of a court or tribunal. Proponents are advised that their Proposals will, as necessary, be disclosed, on a confidential basis, to advisers retained by the City to advise or assist with the NRFP process, including the evaluation of Proposals. If a Proponent has any questions about the collection and use of personal information pursuant to this NRFP, questions are to be submitted to the Project Representative.

4.5.3 CONFIDENTIAL FINANCIAL INFORMATION

All Proponents and any other person(s) who through this NRFP process gains access to confidential financial information of the City are required to keep strictly confidential all information that in any way reveals confidential business, financial or investment details, programs, strategies, or plans learned through this NRFP process. This requirement will continue with respect to such information learned by the Preferred Proponent, if any, over the course of any Agreement that may arise out of this NRFP process. Information pertaining to the City obtained by the Proponent as a result of participation in this process is confidential and must not be disclosed without prior, written authorization from the City.

4.6 Procurement Process Non-Binding

4.6.1 NO CONTRACT A AND NO CLAIMS

This procurement process is not intended to create and will not create a formal, legally binding bidding process and will instead be governed by the law applicable to direct commercial negotiations. For greater certainty and without limitation:

(a) this NRFP will not give rise to any Contract A–based tendering law duties or any other legal obligations arising out of any process contract or collateral contract; and

(b) neither the Proponent nor the City will have the right to make any claims (in contract, tort, or otherwise) against the other with respect to the award of a contract, failure to award a contract or failure to honour a proposal submitted in response to this NRFP.

4.6.2 NO CONTRACT UNTIL EXECUTION OF WRITTEN AGREEMENT

This NRFP process is intended to identify prospective suppliers for the purposes of negotiating potential agreements. No legal relationship or obligation regarding the procurement of any good or service will be created between the Proponent and the City by this NRFP process until the successful negotiation and execution of a written agreement for the acquisition of such goods and/or services.

4.6.3 NON-BINDING PRICE ESTIMATES

The price information provided in Proposals will be used during the evaluation of the proposals for the ranking of the Proponents and unit rate benchmarking. Any inaccurate, misleading or incomplete information, including withdrawn or altered price, could adversely impact any such evaluation or ranking or the decision of the City to enter into an agreement for the Deliverables.

4.6.4 CANCELLATION

The City may cancel or amend the NRFP process without liability at any time.

4.7 Governing Law and Interpretation

These Terms and Conditions of the NRFP Process:

(a) are intended to be interpreted broadly and independently (with no particular provision intended to limit the scope of any other provision);

(b) are non-exhaustive and will not be construed as intending to limit the pre-existing rights of the parties to engage in pre-contractual discussions in accordance with the common law governing direct commercial negotiations; and

(c) are to be governed by and construed in accordance with the laws of the province of British Columbia and the federal laws of Canada applicable therein.

4.8 City Discretion

In addition to any other discretion set forth in this NRFP, the City reserves the right, without limitation, in its sole and unfettered discretion, to:

1. Not consider any Proposal from a Proponent who appears to not have the requisite experience or financial capability;
2. Not consider any Proposal that lacks required information or is otherwise incomplete;
3. Accept items in a Proposal that are in variance with the specific NRFP requirements;
4. Require clarification or additional information where a Proposal is unclear, or allow rectification of defects;
5. Reject any Proposal prior to discussion with the Proponent;
6. Not consider any Proposal that in the City's opinion does not warrant detailed evaluation or is not in the best interests of the City;
7. Communicate with any Proponent;
8. Raise new issues in negotiation that were not mentioned in the NRFP or in a Proposal;
9. Discontinue negotiations with the Preferred Proponent or any backup Proponent at any time if the City concludes that it is unlikely that an Agreement for the Project will be entered into within 14 days of the selection of the Preferred Proponent or such other period acceptable to the City, or that such Proponent is not working diligently to achieve an Agreement or otherwise;
10. Not consider any or all Proposals without any obligation or any compensation or reimbursement to the Proponents;
11. Extend, abridge, modify, or discontinue the process contemplated by this NRFP;
12. Determine, at any time, to withdraw some or all of the Submission Requirements from the process described in this NRFP; and/or
13. Discontinue this NRFP for any reason whatsoever.

[End of Part 4]

APPENDIX A – FORM OF AGREEMENT

BETWEEN *OWNER* AND *CONTRACTOR*

This agreement made in duplicate this

_____ day of _____, 20_____.

Contract: Delem Drive Sanitary Pumpstation and Intersection Upgrade

Reference No. CON26-0191

BETWEEN:

The City of Langford

(the "*Owner*")

AND:

_____

_____

_____
(NAME AND OFFICE ADDRESS OF CONTRACTOR)

(The "*Contractor*")

The *Owner* and the *Contractor* agree as follows:

Article 1 The Work; Start / Completion Dates

1.1 The *Contractor* will perform all *Work* and provide all labour, equipment and material and do all things strictly as required by the *Contract Documents*.

1.2 The *Contractor* will commence the *Work* in accordance with the *Notice to Proceed*. The *Contractor* will proceed with the *Work* diligently, will perform the *Work* generally in accordance with the construction schedules as required by the *Contract Documents* and will achieve *Substantial Performance* of the *Work* on or before the date agreed in negotiation, subject to the provisions of the *Contract Documents* for adjustments to the *Contract Time*.

1.3 Time shall be of the essence of the *Contract.*

Article 2 Contract Documents

2.1 The "*Contract Documents*" consist of the documents listed or referred to in Schedule 1, entitled "Schedule of Contract Documents", which is attached and forms a part of this Agreement, and includes any and all additional and amending documents issued in accordance with the provisions of the *Contract Documents*. All of the *Contract Documents* shall constitute the entire *Contract* between the *Owner* and the *Contractor*.

2.2 The *Contract* supersedes all prior negotiations, representations or agreements, whether written or oral, and the *Contract* may be amended only in strict accordance with the provisions of the *Contract Documents.*

Article 3 Contract Price

3.1 The price for the *Work* ("*Contract Price*") shall be the sum in Canadian dollars of the following

3.1.1 the product of the actual quantities of the items of Work listed in the *Schedule of Quantities and Prices* which are incorporated into or made necessary by the Work and the unit prices listed in the *Schedule of Quantities and Prices*; plus

3.1.2 all lump sums, if any, as listed in the *Schedule of Quantities and Prices*, for items relating to or incorporated into the *Work*; plus

3.1.3 any adjustments, including any payments owing on account of *Changes* and agreed to *Extra Work*, approved in accordance with the provisions of the *Contract Documents.*

3.2 The *Contract Price* shall be the entire compensation owing to the *Contractor* for the *Work* and this compensation shall cover and include all profit and all costs of supervision, labour, material, equipment, overhead, financing, and all other costs and expenses whatsoever incurred in performing the *Work*.

Article 4 Payment

4.1 Subject to applicable legislation and the provisions of the *Contract Documents*, the *Owner* shall make payments to the *Contractor*.

4.2 If the *Owner* fails to make payments to the *Contractor* as they become due in accordance with the terms of the *Contract Documents,* then interest calculated at 2% per annum over the prime commercial lending rate of the Royal Bank of Canada on such unpaid amounts shall also become due and payable until payment. Such interest shall be calculated and added to any unpaid amounts monthly.

Article 5 Rights and Remedies

5.1 The duties and obligations imposed by the *Contract Documents* and the rights and remedies available thereunder shall be in addition to and not a limitation of any duties, obligations, rights and remedies otherwise imposed or available by law.

5.2 Except as specifically set out in the *Contract Documents*, no action or failure to act by the *Owner*, *Contract Administrator* or *Contractor* shall constitute a waiver of any of the parties' rights or duties afforded under the *Contract*, nor shall any such action or failure to act constitute an approval of or acquiescence in any breach under the *Contract*.

Article 6 Notices

6.1 Communications among the *Owner*, the *Contract Administrator* and the *Contractor*, including all written notices required by the *Contract Documents*, may be delivered by hand, or by fax, or by email, or by pre-paid registered mail to the addresses as set out below:

The *Owner*:

City of Langford

2nd Floor, 877 Goldstream Ave., Langford BC V9B 2X8

Email: tauger@langford.ca

Attention: Trevor Auger, AScT

The *Contractor*:

_____

_____

_____

Email: _____

Attention: _____

The *Contract Administrator:*

ISL Engineering and Land Services Ltd.

Mike Elliott, Mid-Island Lead

Email: melliott@islengineering.com

Attention: Mike Elliott

6.2 A communication or notice that is addressed as above shall be considered to have been received

6.2.1 immediately upon delivery, if delivered by hand; or

6.2.2 immediately upon transmission if sent by fax or email (receipt acknowledged), and received in hard copy; or

6.2.3 after 5 *Days* from date of posting if sent by registered mail.

6.3 The *Owner* or the *Contractor* may, at any time, change its address for notice by giving written notice to the other at the address then applicable. Similarly, if the *Contract Administrator* changes its address for notice, then the *Owner* will give or cause to be given written notice to the *Contractor.*

6.4 The sender of a notice by fax assumes all risk that the fax is received in hard copy.

Article 7 General

7.1 This *Contract* shall be construed according to the laws of British Columbia.

7.2 The *Contractor* shall not, without the express written consent of the *Owner*, assign this *Contract*, or any portion of this *Contract*.

7.3 The headings included in the *Contract Documents* are for convenience only and do not form part of this *Contract* and will not be used to interpret, define or limit the scope or intent of this *Contract* or any of the provisions of the *Contract Documents*.

7.4 A word in the *Contract Documents* in the singular includes the plural and, in each case, vice versa.

7.5 This agreement shall ensure to the benefit of and be binding upon the parties and their successors, executors, administrators and assigns.

IN WITNESS WHEREOF the parties hereto have executed this Agreement the day and year first written above.

Contractor:

(FULL LEGAL NAME OF CONTRACTOR, PARTNERSHIP OR INDIVIDUAL)

(AUTHORIZED SIGNATORY)

(AUTHORIZED SIGNATORY)

Owner:

(FULL LEGAL NAME OF CITY)

(AUTHORIZED SIGNATORY)

(AUTHORIZED SIGNATORY)

Schedule 1 Schedule of Contract Documents

The following is an exact and complete list of the *Contract Documents*, as referred to in Article 2.1 of the Agreement.

***NOTE*:** The documents noted with "*" are contained in the "Master Municipal Construction Documents - General Conditions, Specifications and Standard Detail Drawings", edition dated 2019. All sections of this publication are included in the *Contract Documents.*

8.1 Agreement, including all Schedules;

8.2 Supplementary General Conditions, As provided in this NRFP;

8.3 General Conditions*;

8.4 Supplementary Specifications, As provided in this NRFP;

8.5 Ministry of Transportation and Transit 2025 Standard Specifications for Highway Construction;

8.6 City of Langford Bylaw 1000, available online;

8.7 Specifications*;

8.8 Supplementary Standard Detail Drawings, As provided in this NRFP;

8.9 Supplementary Standard Detail Drawings as per Schedule 11, available online;

8.10 Standard Detail Drawings*;

8.11 NRFP Submittals; Appendix B: Submission Form;

8.12 *Contract Documents* listed in Schedule 2 to the Agreement –" List of *Contract Documents*";

8.13 Request for Proposal Documents:

(a) Invitation and Submission Instructions - Part I;
(b) Evaluation, Negotiation and Award - Part 2;
(c) Terms and Conditions of the RFP - Part 3;

8.14 The following information documents:

- WSP Geotechnical reports (5)
- Barski Pumpstation Handling and Backfilling Documents (2)
- Waypoint Construction Environmental Management Plan

8.15 The following Addenda:

Schedule 2 List of Contract Drawings

This section will be completed before the final signing of the agreement.

Site 1: Delem Drive Sewage Pumpstation

TITLE	DRAWING NO.	DATE	REVISION NO.
DELEM DRIVE SANITARY SEWAGE PUMPSTATION			
LOCATION PLAN AND GENERAL NOTES	C1	2026-05-06	
SITE PLAN	C2	2026-05-06	
SECTIONS	C3	2026-05-06	
WET WELL	C4	2026-05-06	
DETAILS	C5	2026-05-06	
CONCRETE SLABS AND PILE LAYOUT	S1.0	2026-06-19	4
PILE AND PILE CAP DETAIL	S2.0	2026-06-19	4
REBAR AND ROCK SOCKET DETAILS	S3.0	2026-06-19	4
LEGEND AND GENERAL NOTES	E001	2026-06-19	-
SITE PLAN	E100	2026-06-19	-
AREA ENLARGEMENT	E101	2026-06-19	-
POWER DISTRIBUTION – SINGLE LINE DIAGRAM	E200	2026-06-19	-
COMMUNICATIONS AND INSTRUMENTATION BLOCK DIAGRAM	E210	2026-06-19	-
DETAILS (1 OF 2)	E300	2026-06-19	-
DETAILS (2 OF 2)	E301	2026-06-19	-
KIOSK (1 OF 2)	E310	2026-06-19	-
KIOSK (2 OF 2)	E311	2026-06-19	-
VALVE KIOSK	E312	2026-06-19	-
CONTROL CABINET LAYOUT	E400	2026-06-19	-
PUMP CABINET LAYOUT	E401	2026-06-19	-
VENTILATION FAN CONTROL LAYOUT	E402	2026-06-19	-
CONTROLS (1 OF 5) VFD CONTROL PUMP 1	E500	2026-06-19	-
CONTROLS (2 OF 5) TYPICAL VFD CONTROL PUMP 2	E501	2026-06-19	-
CONTROLS (3 OF 5) VFD CONTROL VENTILATION FAN	E502	2026-06-19	-
CONTROLS (4 OF 5) CONTROL LADDER	E503	2026-06-19	-
CONTROLS (5 OF 5) CONTROL LADDER	E504	2026-06-19	-

PLC WIRING (1 OF 7) PLC I/O, RACK 0, SLOT 1	E505	2026-06-19	-
PLC WIRING (2 OF 7) PLC I/O, RACK 0, SLOT 1	E506	2026-06-19	-
PLC WIRING (3 OF 7) PLC I/O, RACK 0, SLOT 2	E509	2026-06-19	-
PLC WIRING (4 OF 7) PLC I/O, RACK 0, SLOT 3	E511	2026-06-19	-
PLC WIRING (5 OF 7) PLC I/O, RACK 0, SLOT 4	E513	2026-06-19	-
PLC WIRING (6 OF 7) PLC I/O, RACK 0, SLOT 4	E515	2026-06-19	-
PLC WIRING (7 OF 7) PLC I/O, RACK 0, SLOT 5	E516	2026-06-19	-
TYPICAL PLC/RTU CABINET WIRING TERMINATIONS (1 OF 2)	E600	2026-06-19	-
TYPICAL PLC/RTU CABINET WIRING TERMINATIONS (2 OF 2)	E601	2026-06-19	-
3048.0mm I.D. DELEM LIFT STATION	25-101	2025-06-27	2
COVER PAGE – SANITARY SEWER EXTENSION			
SANITARY SEWER EXTENSION			
LOCATION PLAN, KEY PLAN AND LEGEND	C001	2026-10-06	F
PLAN / PROFILE STA: 10+00 TO STA: 10+95	C201	2026-10-06	F
PLAN / PROFILE STA: 0+00 TO STA: 0+90	C202	2026-10-06	F
PLAN / PROFILE STA: 0+90 TO STA: 2+20	C203	2026-10-06	F
PLAN / PROFILE STA: 2+20 TO STA: 4+15	C204	2026-10-06	F
PLAN / PROFILE STA: 4+15 TO STA: 6+00	C205	2026-10-06	F
PLAN / PROFILE STA: 6+00 TO STA: 7+30	C206	2026-10-06	F
PLAN / PROFILE DETAILS	C501	2026-10-06	F

Site 2: Highway 14 at Delem Drive Intersection Upgrades

TITLE	DRAWING NO.	DATE	REVISION NO.
HIGHWAY 14 AT DELEM DRIVE INTERSECTION			
COVER SHEET	R1-XXXX-000		PB
KEY PLAN / SURVEY CONTROL TABLE / DRAWING INDEX	R1-XXXX-001		PB
LEGEND	R1-XXXX-002	2026-09-25	PB
PLAN / DRAINAGE STA 103+84.482 TO STA 107+20.000	R1-XXXX-101	2026-09-25	PB
PLAN / DRAINAGE STA 107+20.000 TO STA 110+90.000	R1-XXXX-102	2026-09-25	PB
PLAN / DRAINAGE STA 110+90.000 TO STA 114+80.000	R1-XXXX-103	2026-09-25	PB
PLAN / DRAINAGE STA 114+80.000 TO STA 116+40.000	R1-XXXX-104	2026-09-25	PB
PROFILE STA 103+84.482 TO STA 106+75.000	R1-XXXX-201	2026-09-25	PB
PROFILE STA 106+75.000 TO STA 110+00.000	R1-XXXX-202	2026-09-25	PB
PROFILE STA 110+00.000 TO 113+25.000	R1-XXXX-203	2026-09-25	PB
PROFILE STA 113+25.000 TO 116+40.000	R1-XXXX-204	2026-09-25	PB
PROFILE STA 200+38.878 TO STA 201+18.989	R1-XXXX-205	2026-09-25	PB
PROFILE STA 400+00.000 TO STA 402+34.029	R1-XXXX-206	2026-09-25	PB
PROFILE STA 500+00.000 TO STA 500+77.624	R1-XXXX-207	2026-09-25	PB
TYPICAL SECTION	R1-XXXX-301	2026-09-25	PB
TYPICAL SECTION	R1-XXXX-302	2026-09-25	PB
TYPICAL SECTION	R1-XXXX-303	2026-09-25	PB
TYPICAL SECTION	R1-XXXX-304	2026-09-25	PB
DETAILS LOCK BLOCK RETAINING WALL	R1-XXXX-351	2026-09-25	PB
GEOMETRICS AND LANING STA 103+84.482 TO STA 107+20.000	R1-XXXX-401	2026-09-25	PB

GEOMETRICS AND LANING STA 107+20.000 TO STA 110+90.000	R1-XXXX-402	2026-09-25	PB
GEOMETRICS AND LANING STA 110+90.000 TO STA 114+80.000	R1-XXXX-403	2026-09-25	PB
GEOMETRICS AND LANING STA 114+80.000 TO STA 116+40.400	R1-XXXX-404	2026-09-25	PB
SPOT ELEVATIONS	R1-XXXX-501	2026-09-25	PB
SPOT ELEVATIONS	R1-XXXX-502	2026-09-25	PB
SIGNING AND PAVEMENT MARKING STA 103+84.482 TO STA 107+20.000	R1-XXXX-601	2026-09-25	PB
SIGNING AND PAVEMENT MARKING STA 107+20.000 TO STA 110+90.000	R1-XXXX-602	2026-09-25	PB
SIGNING AND PAVEMENT MARKING STA 110+90.000 TO STA 114+80.000	R1-XXXX-603	2026-09-25	PB
SIGNING AND PAVEMENT MARKING STA 114+80.000 TO STA 116+40.000	R1-XXXX-604	2026-09-25	PB
TITLE PAGE – DRAWING INDEX – NOTES	TE-20009-1	2026-07	-
SITE PLAN	TE-20009-2	2026-07	-
SITE PLAN – ENLARGEMENT	TE-20009-3	2026-07	-
ELEVATIONS – DETAILS	TE-20009-4	2026-07	-
ELEVATIONS	TE-20009-5	2026-07	-

City of Langford

Delem Drive Sanitary Pumpstation and Intersection Upgrade

NRFP CON26-0191

NRFP SUBMITTAL FORM

APPENDIX B – SUBMISSION FORM

1. PROPONENT INFORMATION

THE UNDERSIGNED Proponent submits this Proposal to the City for the Work described in the NRFP.

Please fill out the following form, naming one person to be the Proponent's contact for the NRFP process and for any clarifications or communication that might be necessary.	
Full Legal Name of Proponent:	
Any Other Relevant Name under which Proponent Carries on Business:	
Street Address:	
City, Province/State:	
Postal Code:	
Phone Number:	
Fax Number:	
Company Website (if any):	
Proponent Contact Name and Title:	
Proponent Contact Phone:	
Proponent Contact Fax:	
Proponent Contact Email:	

2. ACKNOWLEDGMENT OF NON-BINDING PROCUREMENT PROCESS

The Proponent acknowledges that the NRFP process will be governed by the terms and conditions of the NRFP, and that, among other things, such terms and conditions confirm that this procurement process does not constitute a formal, legally binding bidding process (and for greater certainty, does not give rise to a Contract A bidding process contract), and that no legal relationship or obligation regarding the procurement of any good or service will be created between the City and the Proponent unless and until the City and the Proponent execute a written agreement for the Deliverables.

3. ABILITY TO PROVIDE DELIVERABLES

The Proponent has carefully examined the NRFP documents, including the applicable MMCD documents and has a clear and comprehensive knowledge of the Deliverables required. The Proponent represents and warrants its ability to provide the Deliverables in accordance with the requirements of the NRFP for the rates set out in its Proposal.

4. NON-BINDING PRICING

The Proponent has submitted its pricing in accordance with the instructions in the NRFP and in Pricing (Part 3, Section 3.8) in particular. The Proponent confirms that the pricing information provided is accurate. The

Proponent acknowledges that any inaccurate, misleading or incomplete information, including withdrawn or altered pricing, could adversely impact the acceptance of its Proposal or its eligibility for future work.

5. ADDENDA

The Proponent is deemed to have read and accepted all Addenda issued by the City and posted through the BC Bid Portal prior to the Deadline for Issuing Addenda.

6. NO PROHIBITED CONDUCT

The Proponent declares that it has not engaged in any conduct prohibited by this NRFP.

7. CONFLICT OF INTEREST

The Proponent must declare all potential Conflicts of Interest, as defined in Part 4, Section 4.4 of the NRFP. This includes disclosing the names and all pertinent details of all individuals (employees, advisers, or individuals acting in any other capacity) who (a) participated in the preparation of the Proposal; **AND** (b) were employees of the City within twelve (12) months prior to the Submission Deadline.

If the box below is left blank, the Proponent will be deemed to declare that (a) there was no Conflict of Interest in preparing its Proposal; and (b) there is no foreseeable Conflict of Interest in performing the contractual obligations contemplated in the NRFP.

Otherwise, if the statement below applies, check the box.

- ❑ The Proponent declares that there is an actual or potential Conflict of Interest relating to the preparation of its Proposal, and/or the Proponent foresees an actual or potential Conflict of Interest in performing the contractual obligations contemplated in the NRFP.

If the Proponent declares an actual or potential Conflict of Interest by marking the box above, the Proponent must set out below details of the actual or potential Conflict of Interest:

_____

_____

_____

_____

8. DISCLOSURE OF INFORMATION

The Proponent hereby agrees that any information provided in this Proposal, even if it is identified as being supplied in confidence, may be disclosed where required by law or by order of a court or tribunal. The Proponent hereby consents to the disclosure, on a confidential basis, of this Proposal by the City to the advisers retained by the City to advise or assist with the NRFP process, including with respect to the evaluation of this Proposal.

Signature of Proponent Representative

Name of Proponent Representative

Title of Proponent Representative

Date

I have the authority to bind the *Proponent*.

APPENDIX 1
SCHEDULE OF QUANTITIES AND PRICES

(All prices and *Quotations* including the *Contract Price* shall include all *Taxes*, but shall not include *GST*. *GST* shall be shown separately.)

Any work called for in these Contract Documents, shown on the plans, or which is necessary for the completion of the Work called for in these Contract Documents and which is not specifically listed as a separate payment item in this Appendix shall be deemed incidental to the performance of the Work and to the general purpose of the Contract; no separate payment will be made on account of any such Work, but the costs of any such incidental Work shall be included in the Unit and Lump Sum Prices.

TENDER SUMMARY SHEET

DIVISION	TITLE	AMOUNT
SITE 1: DELEM DRIVE PUMPSTATION		
01	GENERAL REQUIREMENTS	
03	CONCRETE	
15	MECHANICAL	
26	ELECTRICAL	
31	EARTHWORK	
32	ROADS AND SITE IMPROVEMENTS	
33	UTILITIES	
SITE 2: HIGHWAY 14 AT DELEM DRIVE INTERSECTION UPGRADES		
01	GENERAL REQUIREMENTS	
03	CONCRETE	
31	EARTHWORK	
32	ROADS AND SITE IMPROVEMENTS	
34	TRANSPORTATION	
	Subtotal Price	$ -
	GST @ 5%	$ -
	TOTAL	**$ -**

SITE 1 – DELEM DRIVE SEWAGE PUMPSTATION

Item	SSMP Ref.	Description	Unit	Est. Qty.	Unit Price	Amount
DIVISION 1 - GENERAL REQUIREMENTS						
01 45 00 – Quality Control						
1.01	1.3.1S	Project Specific Quality Control	Lump sum	1		
01 53 01 - Temporary Facilities						
1.02	1.9.2S	Mobilization / Demobilization	Lump sum	1		
01 55 00 - Traffic Control, Vehicle Access and Parking						
1.03	1.5.2S	Traffic Management and Traffic Control	Lump sum	1		
01 57 01 - Environmental Protection						
1.04	1.6.1S	Environmental Protection	Lump sum	1		
01 57 02 – Dewatering						
1.05	1.6	Dewatering	Lump Sum	1		
DIVISION 3 - CONCRETE						
03 30 53 – Cast-in-Place Concrete						
3.01	1.5.3	Electrical Kiosk & Generator Foundation	Lump Sum	1		
3.02	1.5.3	Wet Well Foundation and Piles	Lump Sum	1		
03 40 01 - Pre-Cast Concrete						
3.03	1.4.4	Pigging Chamber	Lump Sum	1		
DIVISION 15 - MECHANICAL						
15200 – Mechanical Process Piping						
15.01	1.8.1a	Arrangement and Coordination of Delivery, Unloading, Safe Storage, Rigging, Installation, and Testing and Commissioning of the Package Pump Station	Lump Sum	1		
15.02	1.8.1b	All Pipe and Other Mechanical Works	Lump Sum	1		
DIVISION 26 - ELECTRICAL						
26 60 00 – Electrical Payment Items						
26.01	26-1.1	Coordinate Power Supply to Site	Lump Sum	1		
26.02	26-1.2	Hydro and Communication Conduits	Lump Sum	1		
26.03	26-1.3	Electrical Kiosk Supply, Installation, and Commissioning	Lump Sum	1		
26.04	26-1.4	Generator Supply, Installation, and Commissioning	Lump Sum	1		
26.05	26-1.5	Wet Well Electrical	Lump Sum	1		
26.06	26-1.6	Miscellaneous Electrical for Valve Chamber and Street Light	Lump Sum	1		
26.07	26-1.7	SCADA Programming Coordination	Lump Sum	1		

Item	SSMP Ref.	Description	Unit	Est. Qty.	Unit Price	Amount
DIVISION 31 - EARTHWORKS						
31 11 01 - Clearing and Grubbing						
31.01	1.4.1	Clearing and Grubbing	Lump sum	1		
31 22 01 – Site Grading						
31.02	1.4.2	Site Grading and Excavation	Lump sum	1		
31 24 13 - Roadway Excavation, Embankment and Compaction						
31.03	1.8.4	Removal and Disposal of Existing Gravel/Rock Overburden Piles	Lump sum	1		
DIVISION 32 - ROADS AND SITE IMPROVEMENTS						
32 31 13 – Chain Link Fences and Gates						
32.01	1.5.2	Bollards (Removable – Sheet C5)	Ea.	5		
DIVISION 33 – UTILITIES						
33 30 01 – Sanitary Sewers						
33.01	1.6.1/2	Sewer Pipe PVC DR 28 - 300 mm diameter, for depth of main 1.5m Imported Backfill	Lineal Meters	112		
33.02	1.6.7	Sanitary Tie -In 300mm diameter into existing 300mm diameter sanitary sewer or existing manhole	Each	2		
33.03	1.6.7	Sanitary Tie -In Connection to Pumpstation	Each	1		
33 34 01 – Sewage Forcemains						
33.04	1.8.2/3	**Forcemain Pipe HDPE DR17 200**mm diameter, for depth of main 1.0m Import Backfill	Lineal Meters	682		
33.05	1.8.3	11.25 Degree Bend 200mm diameter HDPE DR17	Each	3		
33.06	1.8.5	**Combination Air Valves & Apparatus** See Sheet C501	Each	2		
33.07	1.8.7	**Flushout** See Sheet C501	Each	1		
33.08	1.8.10	**Forcemain Tie -In** 200mm diameter into existng manhole	Each	1		
33.09	1.8.10	**Forcemain Tie -In** 200mm diameter into new pumpstation	Each	1		

SITE 2 – HIGHWAY 14 AT DELEM DRIVE INTERSECTION UPGRADES

Item	SSMP Ref.	Description	Unit	Est. Qty.	Unit Price	Amount
DIVISION 1 - GENERAL REQUIREMENTS						
01 45 00 – Quality Control						
1.01	1.3.1S	Project Specific Quality Control	Lump sum	1		
01 53 01 - Temporary Facilities						
1.02	1.9.2S	Mobilization / Demobilization	Lump sum	1		
01 55 00 - Traffic Control, Vehicle Access and Parking						
1.03	1.5.2S	Traffic Management and Traffic Control	Lump sum	1		
01 57 01 - Environmental Protection						
1.04	1.6.1S	Environmental Protection	Lump sum	1		
DIVISION 3 - CONCRETE						
03 30 20 – Concrete Walls, Curb and Gutter						
3.01	1.4.4	Island Curb (MoTT SP582-01.04) including letdowns	Lineal meter	75		
3.02	1.4.5	Concrete Sidewalk (MoTT SP582-07.03) (100mm thick) – Broom Finish	Sq.m	180		
03 40 01 – Pre-Cast Concrete (BC MoTT Section 941)						
3.03	1.4.2S	**Lock-Block Retaining Wall** Minimum 375mm Burial	Square Meter	103		
3.04	1.4.4	No-Post Barrier: CBN – BC MoTT DWG SP941-01.01.01	Each	4		
3.05	1.4.4	No-Post Barrier: CRB – BC MoTT DWG SP941-01.02.01	Each	4		
3.06	1.4.4	No-Post Barrier: CTB– BC MoTT DWG SP941-03.01.01	Each	180		
3.07	1.4.4	No-Post Barrier: CTB– 2H BC MoTT DWG SP941-03.02.01	Each	2		
3.08	1.4.4	No-Post Barrier: 810 High Transition - BC MoTT DWG SP941-03.04.01	Each	2		

Item	SSMP Ref.	Description	Unit	Est. Qty.	Unit Price	Amount
DIVISION 31 - EARTHWORK						
31 11 01 - Clearing and Grubbing						
31.01	1.4.1	Clearing and Grubbing	Square Meter	14600		
31 22 01 – Site Grading						
31.02	1.4.1	Topsoil Stripping, 300mm depths	Cubic Meter	5000		
31 24 13 - Roadway Excavation, Embankment and Compaction						
31.03	1.8.7	**Import Embankment Fill** Borrow (Imported Fill)	Tonne	7000		
31.04	1.8.14S	**Remove Existing Asphalt Pavement** Including saw cutting and offsite disposal	Square Meter	3140		
31.05	1.8.14S	**Common Excavation** Remove existing road and shoulder structure including offsite disposal	Cubic Meter	4900		
31 37 10 – Rip-Rap						
31.07	1.4.1	Class 10kg Riprap	Tonne	60		

Item	SSMP Ref.	Description	Unit	Est. Qty.	Unit Price	Amount
DIVISION 32 – ROAD AND SITE IMPROVEMENTS						
32 01 16.7 – Cold Milling						
32.01	1.5.1	**Cold Milling including disposal** To maximum 50mm thickness	Square Meter	3400		
32 11 16.1 – Granular Sub-Base						
32.02	1.4.2	**Granular Sub-Base –** 75mm Minus SGSB to BC MoTT 202.02.03	Tonne	7500		
32 11 23 – Granular Base						
32.03	1.4.1	**Granular Base –** 25mm Minus WGB to BC MoTT 202.02.02	Tonne	8800		
32.04	1.4.1	**Shoulder Gravel -** High Fines Granular Surfacing Aggregate (HFSA) to BC MoTT 202.02.01	Tonne	110		
32 12 13.1 – Asphalt Tack Coat						
32.05	1.5.1	**Asphalt Tack Coat**	Square Meter	11100		
32 12 16 – Hot-Mix Asphalt Concrete Paving						
32.06	1.5.1/2	**Asphalt Lower Course - 75mm Thick** 19mm Medium Mix HMA BC MoTT 502.08	Tonne	1450		
32.07	1.5.1/2	**Asphalt Upper Course - 50mm Thick** 16mm Medium Mix HMA BC MoTT 502.08	Tonne	1500		
32 17 23 – Painted Pavement Markings						
32.08	1.5.3	Permanent Thermoplastic Pavement Markings	Lump Sum	1		
32 91 21 – Topsoil and Finish Grading						
32.09	1.4.1	**Imported Topsoil and Revegetation Seeding** 150mm thickness	Square Meter	8300		

Item	SSMP Ref.	Description	Unit	Est. Qty.	Unit Price	Amount
DIVISION 34 – TRANSPORTATION (BC MoTT SECTION 635)						
34 41 13 – Traffic Signals						
34.01	1.9.4S	Traffic Controller Concrete Base	Lump sum	1		
34.02	1.9.5S	Type 10 Junction Box	Each	4		
34.03	1.9.5S	Type 12 Junction Box	Each	4		
34.04	1.9.5S	Concrete Junction Box	Each	4		
34.05	1.9.6S	50mm RPVC Conduit	Lineal Meter	900		
34.06	1.9.6S	25mm RPVC Conduit	Lineal Meter	65		
34.07	1.9.6S	Underground Wiring	Lump sum	1		
34.08	1.9.7S	Type 2 - 9m Single Davit Luminaire Pole and base	Each	5		
34.09	1.9.8S	Round Detector Loop	Each	8		
34.10	1.9.8S	Rectangular Detector Loop	Each	2		
34.11	1.9.9S	Tyle L Signal Pole c/w base	Each	2		
34.12	1.9.9S	Tyle 4A Signal Pole c/w base	Each	2		
34.13	1.9.9S	Tyle 2 Signal Pole c/w base	Each	2		
34.14	1.9.9S	Tyle L AWF Pole c/w base	Each	2		
34.15	1.9.9S	Pre-Emption Equipment	Lump sum	1		
34.16	1.9.9S	New Service Equipment 100A - 120/240V - Service No. 1	Lump sum	1		
34.17	1.9.9S	Coordinate with and Assist MoTT with Installation and Testing of MoTT Supplied Traffic Controller	Lump sum	1		
34.18	1.9.9S	Coordinate Commissioning with MoTT	Lump sum	1		
34.19	1.9.9S	Coordinate DMS Board removal with MoTT	Lump sum	1		
34.20	1.9.9S	Signage	Lump Sum	1		

City of Langford

Delem Drive Sanitary Pumpstation and Intersection Upgrade

NRFP CON26-0191

SUPPLEMENTARY GENERAL CONDITIONS

Modifications and Additions to the Master Municipal Construction Documents

The following conditions form part of the Contract and are supplementary to the MMCD General Conditions and Specifications. In the event of a direct conflict between the MMCD General Conditions and these Supplementary GCs" the Supplementary GCs" take precedence. Notwithstanding this order of precedence, in the event of a conflict between or within any of the Contract Documents, the more stringent provisions shall apply with the intent that those which produce the highest quality and performance, shall govern.

City of Langford – SUPPLEMENTARY GENERAL CONDITIONS

– Revise the following MMCD Master Municipal General Conditions

GC 1.0 Definitions	**New 1.79**	Archaeological Artifacts	"*Archaeological Artifacts* mean any fossils, artifacts, coins, articles of value or antiquity, remains, and other things of geological, archaeological or historical interest or value discovered at the *Place of the Work*."
	New 1.80	Utilities	"*Utilities* are used broadly and includes but is not limited to any and all lines, poles, structures, facilities, utilities for power, cable, TV, telephone, telecommunications, all sanitary and storm sewers, and all water, oil, gas and electric services, all steam pipes and services, all survey monuments, all street lights, traffic lights, traffic detector loops embedded in pavement, culverts, rail tracks, whether located above or below ground, whether visible or invisible, whether man-made or natural."
GC 2.0 Documents	**2.2.4**	Document Hierarchy	**Replace Section (1) with the following:** "The Contract Documents shall govern and take precedence in the following order with the Agreement taking precedence over all other Contract Documents: a) Agreement b) Addenda c) Supplementary General Conditions d) General Conditions (MMCD), including all supplemental updates. e) Supplementary Specifications **f) Ministry of Transportation and Transit 2025 Standard Specifications for Highway Construction** **g) City of Langford Bylaw No 1000** h) Specifications i) Drawings listed in Schedule 2 to the Agreement j) Standard Detail Drawings **k) Supplementary Standard Detail Drawings as per Schedule 11** l) Standard Detail Drawings (MMCD), including all published supplemental updates m) Executed Form of Tender n) Instructions to Tenderer o) All other Contract Documents."
	New 2.4.3	Copies of Contract Documents	"The *Contract Drawings* shall not be used for the construction of the Work unless marked "Issued for Construction" and sealed by a registered professional engineer"

	New 2.5.1	Access to Information Legislation	Add 2.5.1 Contractors should be aware that part or the entire Contract may be subject to disclosure under the B.C. Freedom of Information and Privacy Act. Contractors who wish to protect their information from disclosure should specifically identify any information within the Contract that constitutes a trade secret of business, or commercial information that is explicitly supplied in confidence, and the release of which could significantly harm their competitive position or interfere with their negotiating position. Neither the Owner nor the Contract Administrator can assure Contractors that information contained in this document will remain confidential, since the Freedom of Information and Privacy Act may require disclosure. Contractors should refer to that legislation, specifically Section 21, for more information.
GC 4.0 Contractor	**New 4.6.1.1**	Construction Schedule	"The Contractor shall schedule and coordinate construction activities: • Noise Bylaw: Follow City of Langford's Noise Bylaw. • Capital Project Coordination: Contractor shall coordinate with other City-led initiatives and third-party contractors. • Development Activity Coordination: Construction activity from other development projects on the corridor that may commence/be active during the construction period.
GC 4.0 Contractor	**New 4.6.1.2**	Construction Schedule	"The Contractor shall provide bi-weekly schedule updates that include the following: A summary of current and completed activities of the previous two-week period, and upcoming work or activities in each block or intersection for the following two-week period. These schedules will be used to improve coordination and provide updates to stakeholders and the general public."
	4.6		**Amend 4.6.2 by deleting:** "monthly" and substituting "bi-weekly or within such shorter time as specified in the *Contract Documents*".
	New 4.9.3	Materials	"Handle and store products in a manner such as to prevent damage, deterioration and soiling. Store packaged or bundled products in original undamaged condition with manufacturer's seals and labels intact, and for materials subject to damage from weather or the environment, store in protective enclosures."

	New 4.9.4		"Install or erect materials in accordance with manufacturer's instructions and requirements. Notify *Contract Administrator* in writing of conflicts between project drawings and specifications, and instructions or requirements of the manufacturer. The *Contractor* will remove and replace or reinstall any materials installed incorrectly, inappropriately or inadvertently due to non-compliance with this section, and the provisions of GC 4.13 shall apply."
GC 18.0 Payment	**18.5**	Payment	**Delete GC 18.5.1 and replace with:** "The *Owner* shall make payment within thirty (30) calendar days of receipt of payment certificate from the *Contract Administrator.* The actual amount paid is subject to the *Owner's* rights under law or this *Contract* to make deductions."
GC 24.0 Insurance	**24.1**	Required Insurance	Course of Construction Builders' Risk Insurance will have the following as additional insureds: West Shore Environmental Services LP, Colquitz Engineering Ltd. And ISL Engineering and Land Services Ltd.
GC 25.0 Maintenance Period	**25.1.2**	Correction of Defects	Add to Clause: "Where in the opinion of the *Owner,* delay would cause serious loss or damage, repairs may be made without notice being sent to the *Contractor* and all expenses incurred will be charged to the *Contractor*."
GC 27.0 Archaeological Artifacts	**New 27.1.1**	Archaeological Artifacts	"Any Archaeological Artifacts discovered by the *Contractor* shall, as between the *Owner* and the *Contractor*, be deemed to be the absolute property of the *Owner*".
	New 27.1.2		"The *Contractor* shall immediately advise the *Contract Administrator* of the discovery by the *Contractor* of any Archaeological Artifacts and take all reasonable precautions to protect and preserve same".
GC 28.0 Wages	**New 28.1**	Wages	"Where applicable, the *Contractor* and all subcontractors shall provide wages that are at least equal to those paid by The Owner when work of a similar or same nature is performed."

City of Langford

Delem Drive Sanitary Pumpstation and Intersection Upgrade

NRFP CON26-0191

SUPPLEMENTARY SPECIFICATIONS

These Supplementary Specifications must be read in conjunction with the Master Municipal Specifications contained in the Master Municipal Construction Documents, 2019 Edition.

SUPPLEMENTARY SPECIFICATIONS INDEX

DIVISION 01 – GENERAL REQUIREMENTS

01 01 00S	General Requirements
01 33 00S	Submittals
01 33 01S	Project Record Documents
01 34 00S	Start-up, Testing and Commissioning
01 45 00S	Quality Control
01 53 01S	Temporary Facilities
01 55 00S	Traffic Control, Vehicle Access, and Parking
01 57 01S	Environmental Protection
01 57 02S	Dewatering

DIVISION 03 – CONCRETE

03 30 53S	Cast-in-Place Concrete
03 40 01S	Precast Concrete

DIVISION 15 – MECHANICAL

15200	Process Piping

DIVISION 26 – ELECTRICAL

26 00 01S	Certification Page for Technical Specifications
26 00 01S	Common Work Results – Electrical
26 05 02S	Seismic Restraints
26 05 10S	Testing and Commissioning
26 05 20S	Wire and Box Connectors (0-1000V)
26 05 21S	Wire and Cables (0-1000V)
26 05 28S	Grounding – Secondary
26 05 29S	Hangers and Supports for Electrical Systems
26 05 31S	Splitters, Junction, Pull Boxes and Cabinets
26 05 32S	Outlet Boxes, Conduit Boxes and Fittings
26 05 34S	Conduits, Conduit Fastenings and Conduit Fittings
26 05 43 01S	Installation of Cables in Trenches and in Ducts
26 05 80S	Fractional Horsepower Motors
26 05 81S	Motors 0.746 to 149kW
26 09 24S	Lighting Control Devices – Low Voltage
26 12 16 01S	Dry Type Transformers up to 600V Primary
26 24 01S	Service Equipment
26 24 02S	Service Entrance Board
26 24 05S	Switchboard TVSS Protection
26 24 16 01S	Panelboards Breaker Type
26 27 16S	Electrical Cabinets and Enclosures
26 27 17S	Programmable Logic Controller
26 27 26S	Wiring Devices
26 28 16 02S	Molded Case Circuit Breakers
26 28 23S	Disconnect Switches – Fused and Non-Fused
26 29 03S	Control Devices
26 29 04S	Transmitters and Indicators
26 29 05S	Data Communications Infrastructure
26 29 23 11S	Variable Frequency Drive
26 32 13 01S	Power Generation Deisel
26 33 53S	Static Uninterruptable Power Supply
26 36 23S	Automatic Transfer Switches
26 50 00S	Lighting
26 54 00S	Heaters and Ventilation
26 60 00S	Payment Item Descriptions

DIVISION 32 – ROADS AND SITE IMPROVEMENTS

32 31 13S	Chain Link Fences and Gates

DIVISION 34 – TRANSPORTATION

34 41 13	Traffic Signals

1.0 Master Municipal Construction Documents

.1S The Supplementary Specifications contained herein must be read in conjunction with the Master Municipal Specifications contained in the Master Municipal Construction Documents **2019 Edition** as identified in the Instructions to Tender article 2.2.

2.0 Format and Numbering System

.1S The Supplementary Contract Specifications follow the same format and numbering system as the Master Municipal Specifications but is differentiated from it by having the letter “S” placed after the section number.

3.0 Construction Survey Layout

.1S The Contract Administrator will provide survey control CAD files for this Contract. The Contractor shall be responsible for the detailed setting out of the work and recording all data required to compile record drawings. The Contractor will be responsible for the detailed survey of the site to execute construction. A preliminary site plan has been provided as a guide only.

.2S Payment for survey layout shall be considered incidental to the work performed and no additional payment will be made to the contractor.

.3S Survey layout shall include:

1. Location, alignment, and elevations of work to accuracy required to satisfy tolerances specified;
2. Offset layout for manholes, utilities, concrete curb work within the roadway, layout nails for pavement markings (including all linework and symbols), and proposed pavement limits sprayed on site for review and confirmation by the Contract Administrator;
3. Establish and maintain reference baselines to facilitate inspection of the work
4. Supply devices, stakes, and other survey markers required for laying out the work
5. Locate and record locations of underground utilities and constructed work
6. Maintain a complete, accurate log of control and survey work as it progresses.
7. Grade sheets, digital RAW (PNEZD format), and CAD file data are to be provided to the Contract Administrator five (5) days prior to executing the work.

.4S All iron pins and wooden witness posts, disturbed by the Contractor shall be re-established by Registered British Columbia Land Surveyors, at the Contractor’s cost, and the appropriate authorities advised of the revised elevation and coordinates. Contractors are advised that the Contract Administrator will monitor construction to ensure that disturbed pins are replaced at the Contractor’s expense prior to completion of the Contract.

4.0	**Notice to Residents**	.1S	Deliver a letter (reviewed and approved by the Contract Administrator and Owner) to all properties which may be affected by construction not less than one week (5 days) and not more than two weeks (10 days) prior to construction. Notify residents directly affected by the work 72 hours in advance of commencement of construction. Cost of notifying residents of ensuing construction and delivery of letters is incidental to the Contract.
5.0	**Safety Procedures**	.1S	Entry Procedure for Confined Space: This procedure shall be used as a guideline only. The Contractor shall be responsible for familiarization with this and all WCB requirements. There must a minimum of two persons: - One person always on the surface, and - One person in the well. Person lift/retrieval devices must be used.
6.0	**Optional Work**	.1S	All items included in the Schedule of Quantities and Prices, which shall be stated to be Optional Work, shall be used only as directed and at the sole discretion of the Contract Administrator. All or any unused portion of these sums shall revert to the City and shall be deducted from the Contract Price before final payment is made.
7.0	**Dust and Mud Control**	.1S	The Contractor shall make every reasonable effort to minimize the creation of dust or mud by his/her operations. Special measures may include, but shall not be limited to, frequent sweeping of existing roads used as haul routes; control of traffic speeds; frequent watering of dirt access and egress routes; watering of the construction areas; re-routing of traffic; modification of construction procedures; and cleaning of off-site haul routes on a regular basis as required by the City. Refer to MMCD Section 31 15 60, Dust Control, for General Products and Execution. Payment for the above items will be considered to be incidental to the work performed and no additional payment will be made to the Contractor.

8.0 Materials Testing .1S

The Contractor will perform Quality Control (QC) testing to ensure that the requirements of the Contract are being met.

All results from QC testing shall be provided to the Contract Administrator. All QC testing, including re-tests will be paid for by the Contractor.

Further materials and density Quality Assurance (QA) testing may be carried out as directed by the Contract Administrator. Initial QA testing carried out at the Contract Administrator's direction will be paid for by the Owner. Where initial tests fail and subsequent QA testing is deemed necessary by the Contract Administrator, the cost of the subsequent testing shall be the responsibility of the Contractor.

If the Contract Administrator requests additional tests on the project by the Contractor's appointed testing agency, the Contractor shall not claim for any cost associated with the delay of testing i.e. standby or return trips.

9.0 Interfering Services .1S

1. The Contractor shall, at their own expense, provide for the uninterrupted flow of all watercourses, sewers, drains, and any other utility encountered during the work. This includes management of surface water drainage, by-pass pumping and temporary potable water service.
2. When other utility structures are encountered, the Contractor shall support and maintain them to the satisfaction of the Contract Administrator so as to protect them from damage. The Contractor shall, at their own expense, at once repair and make good any damage which may occur to any watermains, service or utility pipes, or facilities, or to any electrical conductor or telephone/communication facility or to any street sign, post, fence, walls, walkways, paths, walls, crosswalk, drainage course as a result of this operation.

   These Works are considered to be incidental to the Contract. No additional payment will be made to the Contractor for this work.
3. It is the Contractor's responsibility, wherever necessary, to determine the location of existing pipes, valves, or other underground structures. Wherever it is necessary to explore and excavate to determine the location of the existing underground structures, the Contractor at their own expense regardless of method utilized (including hydrovac) shall make explorations and excavations for such purposes.
4. Where gas mains and/or service lines exist in the vicinity of the proposed work, the Contractor shall consult the officers of the gas company prior to commencing operations and arrange for a mutually agreeable procedure for their protection.

5. When existing poles conflict with the proposed Works, the Contractor shall consult the third party owner (BC Hydro, Telus, Shaw, or other) prior to commencing operations and advise the Contract Administrator of the Works to be undertaken. Costs associated with pole holding/support are incidental to the Work.

10.0 Foreign Utility Adjustments .1S The Contractor will be responsible for adjusting all foreign utilities, unless noted otherwise on the drawings. All adjustments to foreign utilities must be completed to the satisfaction of the Utility Owner. The Contractor should note that certain Utility Owners may decide, after tender closing, to complete their own adjustments, if personnel are available. If the Utility Owner decides to complete their own adjustments, the Contractor will not be compensated for these utility adjustments but Contractor will coordinate the adjustments with the Utility Owner

11.0 Permits from Outside Agencies .1S The Contractor is responsible to obtain and pay for all permits required from outside agencies.

12.0 Clean Up .1S The Contractor shall keep a reasonably clean and orderly site that includes containing equipment, materials, and debris. No debris shall be allowed to remain on roadways, ditches, driveways, etc. All debris shall be cleaned up and removed from site on a daily basis.

All asphalt debris is to be power swept at the tie-ins, transfer areas, and machine and truck clean up areas prior to leaving site on each day of paving

13.0 Disposal Site .1S The Contractor is responsible for the provision of all off-site disposal sites for materials that are to be removed from the construction sites in this Contract.

The Contractor is responsible for all fees, permits and costs associated with the off-site disposal of materials.

14.0 Environmental Protection .1S The Contractor is advised that they are responsible for all of the necessary measures required to prevent the transportation of any silt or other deleterious material from the site into any fish bearing watercourses or their tributaries. All requirements of the Ministry of Environment, Lands and Parks, Fish and Wildlife Branch and Fisheries & Oceans Canada, with respect to air, earth and water pollution, must be strictly adhered to.

15.0 Temporary Drainage Facilities All required temporary drainage facilities, measures for control of ground water, and surface runoff during construction and restoration of temporary drainage Works after construction shall be considered as incidental to the Work being performed under this Contract and no separate payment will be made for this Work.

16.0 Staging/Laydown Areas

Contractors will be responsible for determining the availability and restoration of staging/ laydown areas.

No trees shall be removed without prior written approval from the Owner. Sites shall be restored to existing or better conditions.

17.0 Owner-Supplied and Third-Party Work Coordination

Certain components of the Work will be supplied and/or installed by the Owner and third parties under separate contracts. The Contractor shall coordinate all activities required to accommodate such work, including scheduling, access, site preparation, protection of completed work, and restoration of disturbed areas. No additional payment will be made for coordination, standby, delays, or resequencing associated with work performed by others.

18.0 Metric Units of Measurement .1S

All the units of measurement for payment in this Contract are metric units as modified by the internationally agreed S.I. Units (System International).

However, as the construction industry is not entirely converted to S.I. Units, some conversions will need to be made for purpose of month end and Final Progress Estimates.

The following conversion factors will be used in this Contract:

1 ton = 0.907 tonnes
1 cubic yard = 0.765 cubic metres
1 foot = 0.3048 metres

19.0 Weigh Ticket Control .1S Items in the Schedule of Quantities and Prices measured by weight will be paid for as stipulated in the appropriate section of the Specific Provisions or the Specifications of the Contract. In addition, the Contractor will adhere to the following conditions:

- Payment will be made only for material completely incorporated into the works as witnessed by the Contract Administrator's representative.
- Weigh tickets shall be received by the Contract Administrator's representative immediately preceding the placement of the material in the works.
- The Contractor is to arrange for material supply in such a manner that weigh tickets can be collected and verified at specific locations on the project as arranged with and approved by the Contract Administrator.
- The Contract Administrator shall have the right to refuse approval of tickets received after the day of placement.

If the Contractor fails to meet any of these conditions, then the Contract Administrator shall have the right to refuse approval of weigh tickets presented.

Any overage past 10% of the neat line tonneage as calculated by field measurements shall not be paid for unless otherwise determined by the Contract Administrator.

END OF SECTION

1.0 GENERAL

.1 Section 01 33 00S addresses project specific submittals requiring review by the Contract Administrator. This section must be referenced to and interpreted simultaneously with all other sections pertinent to the works described herein.

1.1 Shop Drawings

.1 Preparation, submission and review of shop drawings is addressed in General Condition 5.0.

1.2 Format of Shop Drawings

.1
1. Unless otherwise noted, the Shop Drawings may be drawn by hand, in CAD format, or other format at selection of the Contractor.
2. Identify details by reference to sheet and detail numbers shown on Construction Drawings.
3. The maximum sheet size is 1,000mm x 707mm
4. Accompany submissions with transmittal letter, in duplicate, containing:
    a. Data;
    b. Project title and number;
    c. Contractor's name and address;
    d. Number of each shop drawing, product data and sample submitted; and
    e. Other pertinent data.
5. Submissions shall include:
    a. Data and revision dates;
    b. Project title and number;
    c. Name of:
        i. Contractor;
        ii. Sub-Contractor;
        iii. Supplier;
        iv. Manufacturer; and
        v. Separate detailer, when pertinent.
    d. Identification of product or material;
    e. Relation to adjacent structure or material;
    f. Field dimensions, clearly identified as such;
    g. Specification Section number;
    h. Applicable standards, such as CSA or CGSB numbers; and
    i. Contractor's stamp, initialed or signed, certifying review of submission, verification of field measurements and compliance with contract documents.

.2 Detail all shop drawings using the metric system. Prepare to a drafting standard equivalent to the Contract Drawings

.3 Submit one reproducible copy of product data sheets or brochures for requirements requested in specification sections and as the Contract Administrator may reasonably request where shop drawings will not be prepared due to standardized manufacture of product.

.4 Catalogue pages or drawings applicable to an entire family or range of equipment will not be accepted as shop drawings unless they are clearly marked to show the pertinent data for the particular materials.

.5 Manufacturer's catalogues, manuals or pricelists will not be accepted as shop drawings. Such materials may be used as supplemental information to the shop drawings.

1.3 Operating and Maintenance Manuals

.1 Submit operating and maintenance manuals to Contract Administrator, per the City of Langford Bylaw 1000 Schedule 7 and MMCD Section 01 33 01, upon completion of Work and prior to Substantial Completion

1.4 Certificates

.1 Upon completion of the work submit Certificate of Electrical Inspection and any requirements of the General Conditions.

1.5 Construction Schedule

.1 Preparation, submission and review of schedule is addressed in General Condition 4.6

.2 The Contractor shall immediately advise the Contract Administrator of any deviations from, or proposed changes to, the Construction Schedule. If, in the opinion of the Contract Administrator, the Construction Schedule as submitted is inadequate to ensure the completion of the Work within the time limited therefor, the Contract Administrator, shall have the right to require the Contractor to submit a new Construction Schedule providing for proper and timely completion of the Work.

.3 The Contractor shall prepare, and where required submit, the following schedules as required by the Contract Administrator:

1. Baseline Construction Schedule
2. Adjusted Baseline Schedules
3. Submittal Schedule for Shop Drawings and Product Data
4. Submittal Schedule for Samples
5. Submittal Schedule for Owner supplied Products
6. Product Delivery Schedule

.4 Schedules must have critical path items identified complete with suitable periods for completion of reviews and the physical work. Where, in the opinion of the Contract Administrator, the Contractor has not allowed reasonable time for reviews and completion of the work, the schedule may be rejected and requested to be revised.

.5 Schedules must have hold points and material tests identified.

.6 Show projected percentage of completion of each item as of first day of month. Indicate progress of each activity to date of submission schedule

.7 Show changes occurring since previous submission of schedule:

1. Major changes in scope.
2. Activities modified since previous submission.
3. Revised projections of progress and completion.
4. Other identifiable changes.

.8 Provide a narrative report to define:

1. Problem areas, anticipated delays, and impact on schedule.
2. Corrective action recommended and its effect.

.9 Include schedule for submitting shop drawings, product data and samples if required. Indicate dates for submitting, review time, resubmission time, float time, and last date for meeting fabrication schedule. Include dates when Owner supplied products will be required. Include dates when reviewed submittals will be required from the Contract Administrator.

.10 Distribute copies of revised progress schedule to:

1. Job site office.
2. Subcontractors.
3. Other concerned parties as directed by the Contract Administrator

1.6 Measurement and Payment

Payment for submissions shall be considered incidental to the Contract and no additional payment shall be made to the Contractor for this work.

END OF SECTION

1.6 **Record Documents and Samples** .6S ***(add clause 1.6.6 as follows)***

The Contractor will keep one set of drawings on-site that will be marked up in red ink identifying all work completed and any changes made during the construction. This copy will be turned over to the Contract Administrator following completion of all works.

1.7 Recording Actual Site Conditions .5S ***(add clause 1.7.5 as follows)***

The Contractor will complete topographic site surveys using the project coordinate system and **deliver an AutoCAD** file with all of the final locations and elevations of the surface and underground works. It will also include the following information:

1. The location and elevation of all existing utilities and services encountered in the construction operation,
2. The location and invert elevation at property line of all individual service connections, and the wye chainage, at the main for all constructed and existing works,
3. A note on each drawing describing the type of trench material (sand, gravel, clay, hard pan, etc.) encountered during construction and the location and profile of all rock.
4. A detail for each tie in point to existing utilities and locations where restrainers are required.

The *Contractor* must keep one set of drawings on-site that shall be marked up in red ink identifying all work completed and any changes made during the construction as follows:

1. Drawings shall include all information as specified elsewhere for the construction drawings, but shall be corrected upon completion of construction to note all works removed or abandoned during construction.
2. Drawings shall be to scale in accordance with the dimensions shown.
3. The Revision Table shall be completed indicating the drawings are Contractor Markups/Redlines.
4. The drawing shall reflect the true elevation and location of all constructed features, in both the plan and profile views.

This copy shall be turned over to the Contract Administrator within 15 Days following completion of all *Works*.

The *Contractor* shall be responsible for the detailed setting out of the *Work* and recording all data required to compile record drawings.

1.8 Measurement and Payment .2S ***(add clause 1.8.2 as follows)***

Payment for recording data for record drawings shall be considered incidental to the Contract and no additional payment shall be made to the Contractor for this work. Final payment will be provided only after all the data is received and accepted by the Contract Administrator.

END OF SECTION

1. GENERAL

Description of Work

.1 Assume full responsibility for and execute complete testing and commissioning of the systems.

Start-up, Testing and Commissioning

.1 The Contractor shall be responsible for all aspects of the testing of the Delem Drive Pump Station except for the following:

.1 the PLC (programmable logic controller),

.2 and the RTU Panel external communications system and the central station control.

.2 The Delem Drive Pump Station is to be commissioned under the scope of this project, however, the forcemain is to be installed by others under separate contract, so exact timing of testing will be uncertain.

The Contractor is responsible for wet testing the works to ensure the pumps and controls are operating as intended. The Contractor will be responsible for all temporary works for wet testing including providing an adequate water supply and ensuring the water used is disposed responsibly. There is no CRD water supply near the site. The closest fire hydrant, which is administered by SSL, is approximately 800 m away near West Shore Parkway and Sooke Road. The Contractor shall make any arrangements and pay for use of this or any other water sources required for commissioning of the pump station.

The Contractor will work with the Contract Administrator to measure drawdown in the wet well to estimate pumping rates to demonstrate the pumps are operating as intended.

Commissioning and testing plan for all equipment is to be developed by the Contractor and submitted to the Contract Administrator for review. The Contractor is responsible for all commissioning and testing of the equipment to demonstrate that it is operating as intended. This includes wet testing the pumps.

.3 The Owner will be responsible for start-up of the PLC and the aspects of the Delem Drive Pump Station operation which involve PLC control. During the period that the Owner is carrying out the PLC testing and start-up procedures, the Contractor shall ensure that qualified representatives of the mechanical and electrical trades are on site and able to correct deficiencies, make adjustments, and assist in start-up procedures as required.

.4 Attendance and participation of these trades in the start-up procedures shall be at the Contractor's cost.

2. PRODUCTS - Not Used

3. EXECUTION

3.1 Personnel

1. The Contractor shall provide competent, experienced and trained personnel to supervise the installation, inspection, pre-testing, testing and commissioning of all components and systems

installed under this contract. The cost of the personnel supplied by the Contractor, manufacturer and suppliers shall be included in the contract prices.

2. Operation of any part of the existing system shall be performed by the Owner.

3. Contract Administrator, Owner and Contractor will be present for the testing and commissioning. The Contract Administrator and Owner may be present for the pretesting.

3.2 Pre-Testing

The Contractor shall:

.1 Pre-test all components and systems before start-up testing and commissioning where possible, including assistance from the equipment manufacturer's representatives. This must be coordinated with the Contract Administrator and Owner.

.2 Inspect all materials and components to ensure that the work is complete and that materials and components are in place and secure

.3 Ensure that all of the manufacturers and suppliers' requirements and recommendations have been complied with.

.4 Clean the facility and equipment.

.5 Pre-test all lights, alarms, locks, and site safety equipment.

.6 Pre-test components and systems by themselves and in combination with related components and systems to ensure they are operating properly and comply with specified requirements.

.7 Pre-test all components over the entire range of operation specified including variations in flow, pressures, speeds and controls/levels.

.8 Pre-test all malfunctions, alarms, safety devices, interlocks and annunciation by simulation of malfunctions as necessary

.9 Pre-test the bypass assembly

2. Should tests, checks, inspections indicate defective components or work or performance in variance with specifications the Contractor shall correct the defect or performance.

3.3 Testing and Commissioning

.1 In the presence of the Contract Administrator and the Owner, the Contractor and the manufacturer's representatives shall:

.1 Test all individual components and systems individually and in combination with related components and systems to ensure they are operating properly and comply with specified requirements.

.2 Test and demonstrate all components and systems over the entire range of operation specified including variations in flow, pressures, speeds and controls.

.3 Demonstrate all malfunctions, alarms, safety devices, interlocks and annunciation by simulation of malfunctions as necessary.

.4 Test and commission electrical components in accordance with Section 26.

.2 Should tests, checks, inspections indicate defective components or work or performance in variance with specifications the Contractor shall correct the defect or performance.

.3 All tests, checks, calibration, adjustments and settings shall be recorded by the Contractor. The record shall be included in the Operation and Maintenance manual.

.4 Provide manufactures certifications as specified before acceptance of the work. The certificates shall be included in the Operation and Maintenance manual.

.5 The Contractor must give the Contract Administrator 5-Days notice prior to any coordination requested or required with the Owner to install the pertinent equipment for its SCADA system.

.6 Once the testing of components and systems is considered satisfactory by the Contract Administrator the Contractor shall then operate the entire system in the presence of the Contract Administrator and the Owner.

.7 Upon achieving Substantial Performance and once the operation of the entire system is considered acceptable and operating successfully for at least 48 hours, or longer duration as directed by the Contract Administrator and Owner, the Owner will assume responsibility for the operation of the facility at a time acceptable to the Owner.

.8 Contractor to completely refuel all generators and fuel storage tanks after successful commissioning and prior to transfer to the Owner.

Attendance by Manufacturers' Representatives

.1 Provide the services of a qualified manufacturer's service representative on site to inspect the installation of the equipment and assist with start-up and commissioning.

.2 Allow sufficient time on site to complete all required functions.

.3 Provide one (1) day training seminar to the Contractor and Owner. This seminar is required prior to the commissioning of any equipment and will provide formal training on the operating procedures as well as operation and maintenance instructions.

END OF SECTION

SECTION 01 45 00S – QUALITY CONTROL

1.0 GENERAL

.1 Section 01 45 00S addresses general requirements for quality control testing and results to be completed by the Contractor. This section must be referenced to and interpreted simultaneously with all other sections pertinent to the works described herein.

1.1 Section 01 45 00S Includes

.1 Minimum quality control testing requirements

.2 Quality control submittals

.3 Geotechnical Work Plan

1.2 Related Documents

.1 Site Specific Geotechnical Reports can be found in the additional documents as follows:

- .1 Sooke Road Site Characterization Geotechnical Report dated August 23, 2024, WSP Project No. CA0024295.3529
- .2 Technical Memorandum P-Y Curves and Displacement Profile for Delem Drive Pumpstation Pile Design dated June 26, 2025 WSP Reference No. CA0051793.7685-001-TM-Rev0
- .3 Technical Memorandum Delem Drive Pump Station Geotechnical Comments on Construction Sequencing dated October 9, 2025 WSP Reference No. CA0051793.7685-004-TM-RevA
- .4 Technical Memorandum Delem Drive Pump Station: Geotechnical Comments on Construction and Settlement dated April 2, 2026 WSP Reference No. CA0051793.005-TM-Rev0
- .5 Technical Memorandum P-Y Curves and Displacement Profile for Delem Drive Pumpstation Pile Design dated April 2, 2026 WSP Reference No. CA0051793.7685-001-TM-Rev1
- .6 Handling Procedures for Fibreglass Pumping Stations, Barksi Industries (1985) Ltd
- .7 Backfill Recommendations for Barski FRP Vertical Pump Stations, Barksi Industries (1985) Ltd

1.3 Site Specific Quality Management Plan

.1 The contractor must submit a Site Specific Quality Management Plan with an Inspection and Testing Plan for the *Contract Administrators* review and approval prior to starting the work.

.2 The Contractor shall perform the Work in accordance with the Site Specific Quality Management Plan. The Site Specific Quality Management Plan must be explicitly approved by the *Contract Administrator* prior to commencement of Work.

.3 The Inspection and Test Plans (ITPs) included in the Site Specific Quality Management Plan shall be prepared and updated as the Work progresses and be in an approved format and shall encompass, as appropriate, all fabrication, construction, inspection and test activities to be implemented during production, construction, installation and commissioning in accordance with the Contract. If the Contractor submits ITPs using their own internal documents, they must meet as a minimum the requirements of the Owner's ITP proforma as outlined in the Site Specific Quality Management Plan. If the Contractor's ITP fails to meet these requirements, Contractor shall submit an amended ITP addressing any issues raised by the *Contract Administrator*. The Contractor's ITP shall not be considered and accepted until approved in writing by the *Contract Administrator*.

.4 As part of the Site Specific Quality Management Plan, the Contractor must retain and pay for the services of an independent Qualified Geotechnical Testing Agency, acceptable to the *Contract Administrator*, to provide testing during construction.

.5 The Contractor shall prepare and maintain a Lot Register for the Work (2010 Microsoft Excel format), as the primary means of tracking all test results and inspections; the Lot Register will be updated on a weekly basis and be submitted to the *Contract Administrator* as part of the weekly report.

1.4 Pumpstation Geotechnical Workplan

.1 The Contractor is to follow all requirements and recommendations set out in the Geotechnical Reports and Memorandums in the Appendices.

.2 The ground conditions in the Delem Drive area are geotechnically challenging and as such the Contractor shall develop a detailed works plan of construction methodology and sequencing before commencing work. The works plan will be reviewed by the Owner's geotechnical engineer and shall address the following minimum items:

.1 Temporary excavation for the wet well, design and placement of proposed type of shoring, bracing or sheet piles and proposed dewatering system necessary to maintain a relatively narrow excavation.

.2 Sequencing and construction methodology for installation of the structural piles for the wet well base concrete slab.

.3 Handling, placing, site preparation and formwork necessary to install the wet well base concrete slab.

.4 Handling, placing and compaction of angular rock fill and geomembrane in the natural undisturbed areas as identified in the geotechnical memos.

Handling, placing and compaction of localized backfilling around the FRP wet well with manufacturer's recommended methods and materials.

1.4 Measurement and Payment

.1 Payment for the lump sum shown in the tender form at the following increments:

1. 20% upon submission of the quality management plan
2. 70% split into equal increments for the expected progress draws
3. 10% upon total completion

1.5 Inspection and Testing

The testing frequencies for the Site Specific Quality Management Plan are, at a minimum but not limited to, as follows:

.1 Aggregates and Granular materials

- .1 Sieve analysis of sands and aggregates, one per 300 tonnes of any specific material supplied to the work
- .2 Modified proctor density curves, one per 300 tonnes of any specific material supplied to the work
- .3 Pipe Bedding (Mainline), one density per 50 lineal metres of trench
- .4 Pipe Backfill (Mainline), one density per 50 lineal metres of trench at maximum 300mm lift spacing
- .5 Pipe Bedding (Service or CB Lead), one density per service
- .6 Pipe Backfill (Service or CB Lead), one density per service at maximum 300mm lift spacing
- .7 Granular Base (curbs), one density per 50 lineal metres of curb
- .8 Granular Base (sidewalks), one density per 100 square metres of sidewalk
- .9 Roll test on granular base course

.2 Concrete Walks, Curbs and Gutters

- .1 Design Mix and Supplier Confirmation
- .2 Concrete Strength Tests (minimum three specimen cylinders in accordance with CSA A23.1) for:
  - i. Curb and Gutter, once per 300 linear metres and/or one per day during placing
  - ii. Sidewalks, once per 150 square metres and/or one per day during placing
- .3 Slump tests shall be made in conformance with CAN/CSA A23.2. One slump test shall be completed for every strength test; slump tests are not required for extruded concrete using no slump mix design.
- .4 One air content test for every strength test in conformance with CAN/CSA A23.2

Contractors are encouraged to submit alternatives to assist with cold weather placing and curing for review

.3 Cast-in-place reinforced concrete

.1 Design Mix and Supplier Confirmation

.2 Concrete Strength Tests (minimum three specimen cylinders in accordance with CSA A23.1).

.3 Slump tests shall be made in conformance with CAN/CSA A23.2. One slump test shall be completed for every strength test; slump tests are not required for extruded concrete using no slump mix design.

.4 One air content test for every strength test in conformance with CAN/CSA A23.2

Contractors are encouraged to submit alternatives to assist with cold weather placing and curing for review

.4 Hot-mix asphalt concrete paving

.1 Asphalt mix design and supplier confirmation

.2 Aggregate gradation testing, one per 300 tonnes of production and/or one per day during placement

.3 Marshall testing, three (3) briquettes for every 300 tonnes of production and/or one per day during placement

.4 Compaction testing, three (3) cores for every 500 square metres of new base asphalt. Surface paving will not be permitted until base asphalt cores have been provided

.5 Density testing memorandum every day during placing

.5 Growing Medium

.1 Soil Analytical Requirements

1. Ph
2. Lime requirement to achieve PH
3. Soluble salts or electrical conductivity (e.c.)
4. % sands + % fines (silt and clay) + % organic matter = 100%
5. % total nitrogen
6. Available levels of phosphorus, potassium, calcium and magnesium.

END OF SECTION

1.1 Section Includes .5S ***(add clause 1.1.5S)***

Mobilization/ Demobilization

1.9. Measurement and Payment .2S ***(add clause 1.9.2)*** "Payment for mobilization and demobilization shall include all the Contractor costs of mobilization at the beginning of the project and the cost of demobilization at the end of the project.

1. Included in the mobilization are such items as bonding, insurance, permits, moving personnel, equipment and materials to the site, setting up temporary facilities and all preparation for performing the Work.
2. Included in demobilization are preparation and submission of record drawings, operation and maintenance manuals, removal of all personnel, equipment and materials and cleanup of the Site and the Work.
3. The lump sum price bid for this work shall be relative to the costs involved but shall not exceed ten percent of the Tender Price.
4. Payment shall be made as follows, as approved by the Contract Administrator:
    1. 60% of the lump sum bid will be included in the first progress payment certificate.
    2. 40% of the lump sum bid will be included in the final progress payment certificate.
5. The Contract Administrator may at their discretion authorize partial payment if mobilization or demobilization is not complete.
6. The cost of other items specified under General Requirements shall be considered incidental to the work and separate payment will not be made for any other items in the General Requirements unless specifically noted in the Schedule of Quantities and Prices."

END OF SECTION

1.4 Traffic Management .15S ***(add clause 1.4.15S)***

Project Specific Requirements

.1 Highway 14 (Sooke Road) is under the jurisdiction of the Ministry of Transportation and Transit (MoTT)

.2 As it is a numbered highway a Category 3 Traffic Management Plan to MoTT Traffic Management Manual for Work on Roadways (2020) standard to be submitted to the Owner and MoTT for acceptance prior to the Work commencing

.3 The owners group has applied for construction permits as follows:

.1 File 2025-01556 – Application for construction sanitary sewer infrastructure

.2 File 2025-02899 – Application to construction intersection

While these permits have not been received yet, the understanding with the Ministry is that the sanitary sewer permit will be received prior to construction start and the intersection permit will be given shortly after construction proceeds on the pumpstation.

.4 Contractors will need to prepare, submit and obtain authorization of the H1080 “Work notification/lane closure request and approval” prior to any works within the MoTT rights of-way.

.5 There must be a minimum of one lane open in each direction which maintains a 60km/hr speed limit with the exclusion of:

.1 All lanes of travel must be reinstated by 12:00pm on the day before (typically Friday unless the holiday falls on a Friday) a long weekend and cannot be reduced to 2 lanes until 12:00pm on the day following the long weekend

.2 If work cannot be accommodated with this level of vehicle access, contractors should expect to work in alternate hours which will require a noise bylaw exemption from the City of Langford.

.6 Contractors should supply and maintain three Changeable Message Boards for the duration of the project. These boards will be continuously updated to provide traveller’s advance notice of road closures.

.7 Temporary Restoration:

.1 All trenches in the vehicular travelled zone must be reinstated with hot-mix asphalt

.2 All trenches crossed by pedestrians must be reinstated with hot-mix asphalt or better

.3 Trenches outside of the travelled zone may remain in gravel up until they need to be returned to service; however, these areas must be cordoned off by construction fencing or other delineation.

.4 It will be permitted to have cyclists dismount and act as a pedestrian through the work zone.

.5 All temporary ramps must be less than 5%. Hard drops to milled surfaces will not be permitted.
.6 No ramping will be allowed to castings in the vehicular travelled area. Castings will be raised or lowered as required. Plating will be permitted, but if a manhole or equal is paved over then that casting will be raised and the entire lane will be milled and paved from crosswalk to crosswalk or to the limits of the project. No patching will be permitted.

.8 General Conditions:
.1 Work hours shall comply with the City of Langford Noise Bylaw No. 2056 unless otherwise approved by the Contract Administrator.
.2 Access to all businesses and residences must be maintained at all times.
.3 Safe pedestrian access must be maintained at all times. Sidewalks or pedestrian passageways are to remain open except where permitted by the City of Langford as part of the TMP. Contractor must provide wheelchair-accessible passage with appropriate traffic control devices.

1.5 Measurement and Payment

.2S Payment for the lump sum shown in the tender form at the following increments:

.1 20% upon submission of the traffic management plan
.2 70% split into equal increments for the expected progress draws
.3 10% upon total completion

END OF SECTION

1.5 Construction Environmental Management Plan

.1 The contractor shall prepare a construction environmental manager plan (CEMP) control plan detailing each phase of construction and what measures will be taken to prevent deleterious materials entering the environment, particularly Bilston Creek.

.2 The Contractor shall retain the services of an Environmental Monitor (EM) or Qualified Environmental Professional (QEP) to prepare the plan, monitor the work and provide reporting services required to fulfil the approving authority requirements.

.3 The plan shall directly relate to the construction schedule milestones and activities.

.4 The minimum expected measures are as follows:

1. Sediment and erosion control measures implemented by the contractor shall be in accordance with the Department of Fisheries and Oceans document entitled “Land Development Guidelines for the Protection of Aquatic Habitat” It is incumbent on the contractor to acquire these guidelines and familiarize themselves with the requirements therein.
2. The works are to be undertaken in a manner which precludes the conveyance and discharge of fine silts and clay particles into the receiving environment.
3. Construction activity which involves exposing un-vegetated surfaces and moving of aggregates should be curtailed in periods of wetter weather, unless that curtailment increased the chance of environmental damage.
4. No silt laden water from excavations shall be pump out or otherwise directly discharged into any watercourse or storm sewer system.
5. Stockpiles of aggregate or overburden should not remain exposed for long periods. During dry weather longer term stockpiles should be covered with straw, polyethylene or tarps, and during wetter weather should also utilize silt fencing.
6. Stripping of existing organics should only be undertaken in period of dry weather and the extents of stripping should be no larger than the contractor needs for current construction.
7. No accumulation of sediment/mud shall be allowed on roads and/or private property.

1.6	**Measurement and Payment**	.2S	***(add clause 1.6.2S)*** Payment for the lump sum shown in the tender form at the following increments: 1. 20% upon submission of the ESC Plan 2. 70% split into equal increments for the expected progress draws 3. 10% upon total completion
1.9	**Related Documents**	.1	Site Specific Environmental Assessments can be found in the additional documents as follows: 1. Construction Environmental Management Plan; Delem Drive Sanitary Sewage Pump Station dated May 29, 2026 Waypoint Environmental Services Project No. 25112

END OF SECTION

1. GENERAL

1.1 Description of Work

.1 The Contractor shall provide dewatering to maintain the excavations and construction site area free of water while work is in progress and protect against surface runoff.

.2 The Contractor shall provide a Dewatering Plan which outlines how to manage water during construction, including minimizing environmental impact and ensuring compliance with regulations.

.3 The plan shall include identifying potential water sources, selecting appropriate dewatering methods and equipment, and implementing measures for disposing of dewatering discharge water while protecting the natural environment in the vicinity of the pump station.

1.2 Site Assessment and Planning:

.1 Identify water sources: Determine the sources of water requiring removal, such as groundwater, surface runoff, or precipitation.

.2 Evaluate site conditions: Consider soil type, topography, and proximity to sensitive areas like waterways or wetlands.

.3 Select dewatering methods: Choose appropriate methods based on the site conditions, water volume, and regulatory requirements. Common methods include sump pumping, well points, deep wells, and wellpoint systems.

.4 Determine discharge locations: Identify suitable location(s) for receiving dewatering discharges, considering potential impacts on nearby water bodies.

.5 Plan for treatment: Determine if water treatment is necessary before discharge and select appropriate treatment methods.

1.3 Environmental Protection Measures:

.1 Erosion and sediment control: Implement measures to prevent soil erosion and sediment from dewatering discharge water.

.2 Discharge management: Ensure dewatering discharge water meets the established water quality criteria before release. This may involve using settling ponds, filtration systems, or other treatment technologies.

1.4 Dewatering

.1 Keep excavations and construction site area free of water while work is in progress and protect against surface runoff.

.2 Provide pumps, piping, temporary drains, trenches, sumps, and related equipment to remove water.

.3 For dewatering systems which operate on a 24-hour basis, the Contractor is responsible for operation and maintenance of the equipment by competent staff, including re-fueling the pumps and generators at any time, including night-time and weekends to ensure equipment is fully functional.

.4 When the dewatering system includes a large above ground pump system and a diesel generator, noise reduction measures must be performed if the equipment is installed in the vicinity of the existing residences.

.5 Provide settling basins, siltation fences, and other siltation control facilities to remove suspended solids or other materials before discharging to storm sewers or water courses.

.6 Submit details of proposed dewatering methods to Contract Administrator and Owner for review. Maintain groundwater table a minimum of 300mm below sub-grade elevations.

.7 Do not use sanitary sewers or private property for discharge of water.

.8 Dispose of water in a manner that is not detrimental to the environment, public and private property, or any portion of work completed or under construction.

1.5 Permitting and Compliance:

.1 Obtain necessary permits: Secure all required permits from relevant regulatory agencies before commencing dewatering activities.

.2 Meet regulatory requirements: Ensure all dewatering activities comply with local, provincial, and federal regulations related to water quality, discharge, and environmental protection.

.3 Do not operate construction equipment in watercourses.

.4 A fuel spill emergency response kit is to be kept on site at all times.

1.6 Measurement for Payment

.1 Payment for all dewatering work performed under this section will be lump sum.

END OF SECTION

1.5	**Measurement and Payment**	.1S	Delete the following text, "…based on volume calculated from actual measurement of dimensions" and replace with "lump sum".
		.2/.3S	Delete the following text, "Excavation and backfilling will be paid under appropriate pay items in Section 31 23 01 – Excavation, Trenching and Backfilling", and replace with "Excavation and backfilling is to be included in the lump sum price".

END OF SECTION

1.4 Measurement and Payment .6S **Add Clause 1.4.6:**

Payment for **Precast** chambers shall be lump sum and shall include supply of chamber, excavation, subgrade preparation, and placement at exact locations as shown on the Contract Drawings.

END OF SECTION

Table of Contents

No. Clause Page

PART 1 GENERAL 2

1.1 Work Included 2
1.2 Related Work 2
1.3 Quality Assurance 2
1.4 Reference Standards 2
1.5 Submittals 3
1.6 Delivery, Storage and Handling 3
1.7 Co-operation and Sequencing of work 3
1.8 Payment 3

PART 2 PRODUCTS 3

2.1 General 3
2.2 Pipe Support 4
2.3 Pipe Sleeves 4
2.4 Flange Isolation Gaskets 4
2.5 Instrumentation 5

PART 3 EXECUTION 5

3.1 General Piping System Installation Requirements 5
3.2 Fabrication 5
3.3 Welding 5
3.4 Piping Through Concrete, Masonry and Walls 6
3.5 Tolerances for Pipe Installation 6
3.6 Unions 6
3.7 Pressure and Leakage Testing of Piping 6
3.8 Disinfection of Piping 7
3.9 Stainless Steel Process Piping 7

PART 1 GENERAL

1.1 Work Included

.1 This Section covers process mechanical piping, fittings, valves, supports and appurtenances, as shown on the drawings and described in the related Sections.

.2 Provide all labour, materials and incidentals required to construct complete and operable mechanical piping systems, regardless of whether such are specifically called for in the Drawings or Specifications.

.3 Read this Section in conjunction with the Drawings and Contract Documents, particularly the piping specifications. Where there is a conflict, the Engineer shall be notified to resolve it. The Engineer has the right to apply the more stringent requirement in such cases.

1.2 Related Work

.1 Division 33 Utilities

1.3 Quality Assurance

.1 Work shall be carried out only by qualified tradesmen.

.2 Process piping installation shall be by Certified Plumbers or Certified Pipe Fitters with a BC Certificate or Interprovincial Red Seal.

.3 Submit qualifications if required.

.4 Welders shall be CSA or ASME qualified and shall be certified under the BC Boilers Branch Safety Act and Regulations. As a minimum, welders shall hold a Certificate of Qualification with Interprovincial Red Seal Endorsement or a Welder B – Certificate of Qualification with Interprovincial Red Seal Endorsement.

.5 Conform to all standard specifications referenced herein.

1.4 Reference Standards

.1 ANSI/ASME Boiler and Pressure Vessel Code, Section VIII, Division 1.

.2 ANSI/ASME B31.3 Process Piping

.3 ANSI B32.1 Metal Products

.4 CSA CAN3-S16.1-M Steel Structures for Buildings (Limit State Design)

.5 CSA W59-M Welded Steel Construction (Metal Arc Welding)

.6 CSA W47.1 Certification of Companies for Fusion Welding of Steel Structures

.7 ASTM A380 Standard Practice for Cleaning, Descaling and Passivation of Stainless-Steel Parts.

.8 ASTM A967 Standard Specification for Chemical Passivation Treatment for Stainless Steel Parts.

1.5 Submittals

.1 Provide shop drawings for all fabricated steel and stainless-steel piping, supports and appurtenances, in accordance with Section 01 33 01.

.2 Submit manufacturers' literature and catalogue information for all valves and equipment.

.3 Submit list of recommended spare parts with current prices for valves and equipment.

.4 Submit welder qualifications and welding procedures as specified or required.

1.6 Delivery, Storage and Handling

.1 Protect all piping and valves from weather, and from all damage.

1.7 Co-operation and Sequencing of work

.1 Co-ordinate the work of all trades involved in the work.

.2 Co-ordinate installation of instrumentation and equipment requiring both piping and electrical connections. These include but are not limited to:
- flowmeters
- pressure switches, floats and transducers

1.8 Payment

.1 Payment for all work covered under this Section will by lump sum including:

(a) All costs for arrangement and coordination of delivery, unloading, safe storage, rigging, assembly (if any), installation, and testing and commissioning of the package pump station including FRP tank, sewage pumps, motors, flow meter, valves, piping and appurtenances, except electrical connections and testing, which shall be included under Section 26 Electrical.

Measurement for payment of this item will be made at the lump sum price tendered with fifty percent (50%) of the lump sum price being paid upon acceptance of delivery, installation, and backfilling of the package pump station at the site. The remaining fifty percent (50%) of the lump sum price will be paid upon completion and successful testing and commissioning of the package pump station as identified under Section 01 34 00 SS Start-up, Testing and Commissioning and to the satisfaction of the Contract Administrator.

(b) All costs for preparation of shop drawings, fabrication, supply and installation of all process piping, valves, fittings, fasteners, supports related to the pigging chamber, and all other mechanical equipment and appurtenances not part of the package pump station and as detailed in the Contract Drawings.

PART 2 PRODUCTS

2.1 General

.1 All products shall conform to the Piping Specification Sheets.

.2 All products shall be new, undamaged, and free from rust and defects.

.3 All products of a similar nature shall be the product of a single manufacturer.

2.2 Pipe Support

.1 Pipe support methods may be detailed on the drawings.

.2 The Contractor shall provide all pipe hangers, supports, guides, anchors, brackets and related appurtenances required for the installation of the piping and equipment, regardless of whether these are shown on the drawings.

.3 All piping shall be so installed that it will in no way be strained or distorted by expansion and contraction. Anchors shall be provided wherever necessary to protect equipment and control direction of pipe movement. Pipe guides shall be provided at each side of each expansion joint.

.4 Supports, hangers, and brackets shall be attached to walls or structural members as detailed or approved.

.5 All hangers shall be capable of vertical adjustment after pipe is erected.

.6 Pipe shall not be hung from or attached to other pipe.

.7 Perforated band iron wire or chain hangers will not be approved.

.8 Hanger rods shall be continuously threaded stainless steel.

.9 For pipe hangers, provide lateral support (sway bracing) as indicated on the drawings.

.10 Pipe supports shall be provided as shown on the drawings, but at least in accordance with the following:

Size (mm)	Hanger Rod Diameter (mm)	Maximum Support Centres		
		PVC Pipe (mm)	Copper Pipe (mm)	Steel Pipe (mm)
12 to 50	10	1500	2500	2500
65 to 90	12	2000	-	2500
100	16	2200	-	2500
150	19	2600	-	3750
200	22	3000	-	3750
250	22	3500	-	3750
300	22	3800	-	3750

.11 Vertical piping shall be supported with riser clamps as shown, and also in accordance with the above table.

2.3 Pipe Sleeves

.1 All pipes, drains and vents passing through concrete walls shall be cast in place with seepage collars as detailed on the drawings.

.2 Where pipes pass through floors, sleeves shall be used as specified herein.

2.4 Flange Isolation Gaskets

.1 Where indicated on the drawings, install in the place of rubber flange gaskets, isolation gaskets to the following requirements:

(a) gaskets to be full diameter flange insulating gaskets with precision located holes to match the flange bolt pattern, phenolic with nitrile seal elements.

(b) gaskets to be rated to the full working pressure of the pipe.
(c) insulating sleeves to be 0.79 mm thick wall, polyethylene.
(d) insulating bolt washers to be 3.97 mm thick, polyethylene.

.2 Provide PSI Type "E" Linebacker gaskets c/w sleeves and washers to the above requirements, available from Bedford Pipe & Engineered Products Ltd. Burnaby, B.C. (604) 291-6271, or approved equal.

.3 Install to manufacturer's recommendations, including bolt tightening sequence.

2.5 Instrumentation

.1 Refer to Section 16 for instrumentation.

PART 3 EXECUTION

3.1 General Piping System Installation Requirements

.1 Carefully place and support all pipe at proper lines and grades; where possible slope to permit complete drainage.

.2 Blow or flush all piping clean after assembly and before connecting to equipment.

.3 Handle pipes with care at all times and use equipment designed for the purpose. Replace any pipe damaged in handling or installing.

.4 Install and join pipe in accordance with manufacturer's written instructions and good practice.

.5 Repair factory coatings at field cuts or where otherwise damaged in accordance with Section 09900.

.6 Do not allow stainless steel piping to come in contact with mild steel tools or metalwork. Repair all marks resulting from such contact.

3.2 Fabrication

.1 Fabricated piping sections shall be assembled square, true, and in accordance with good shop practice.

.2 Flanges shall be true and perpendicular to the axis of the pipe or fitting.

.3 Plain ends of pipe or fittings shall be true and perpendicular to the axis, with edges deburred.

3.3 Welding

.1 Welding shall be performed by qualified welders using approved procedures.

.2 Field welding of pipe joints shall be kept to a minimum. Shop-fabricate piping assemblies in largest sections possible.

.3 Passivate all welds by swabbing with a pickling solution of 12 percent nitric and 3 percent hydrofluoric acid. Scrub and wash with stainless steel brushes until clean.

.4 The Owner may employ an independent testing firm to conduct quality control tests to determine compliance of the work with the Contract Documents.

3.4 Piping Through Concrete, Masonry and Walls

.1 Where pipe passes through walls, exercise extreme care to ensure that joints are watertight.

.2 Free pipe of all dirt and grease to secure a tight bond with concrete.

.3 Water supply piping under slabs or in walls shall be encased in standard weight flexible polyethylene pipe one size larger than copper tubing.

.4 Floor, wall and ceiling plates shall be provided on all exposed piping passing through walls, floors, ceilings, or partitions. Plates shall be steel with polished nickel finish and securely anchored to the pipe.

3.5 Tolerances for Pipe Installation

.1 Install inside piping precisely to dimensions shown on drawings.

.2 Cast sections of major piping into place only after piping has been assembled in place. Spool pieces may be substituted for long delivery items.

3.6 Unions

.1 Unless pipe is flanged, provide unions in all piping connections to all items of equipment to permit the removal of each and every device without dismantling the pipe.

3.7 Pressure and Leakage Testing of Piping

.1 Supply all equipment, materials, and install all necessary fittings to complete pressure testing to the satisfaction of the Engineer.

.2 Provide all temporary caps, flanges, valves, and thrust blocks required for testing.

.3 Tests shall be completed before field painting of all piping.

.4 The Contractor shall notify and obtain the approval of the Engineer prior to proceeding with initial testing of the piping. Upon successful completion of the initial tests, the Engineer is to be contacted to witness a final test.

.5 The purpose of the test is to detect any damaged material that may have been installed, and to ensure that all fittings are properly braced. Pipe, fittings, valves and joints should be inspected thoroughly while under pressure.

.6 If leaks develop or excessive pipe movement is noted, make all necessary corrections and new tests until all defects or deficiencies have been remedied. Corrections necessary for the proper functioning of the installation shall be made to the satisfaction of the Owner before final acceptance of the facility.

.7 Provide a written report to the Owner summarizing the results of the pressure and leakage testing for each section. The report will include the type of test, duration, allowable leakage rate, and actual leakage. The report will be prepared by the Contractor and shall be signed by both the Engineer and the Contractor.

.8 Do not test against closed valves unless approved by the Engineer. Provide blind flanges and test caps where necessary.

.9 Check all drains for obstructions.

.10 Contractor to test pressure piping at 125 PSI for one (1) hour without leakage.

.11 Gravity piping that is below the water table is to have zero infiltration.

3.8 Disinfection of Piping

.1 Complete disinfection of all potable and process water piping as specified in the latest edition of the Master Municipal Construction Documents.

3.9 Stainless Steel Process Piping

.1 Stainless steel piping shall meet the following specifications:

Stainless Steel Process Piping		**SS02**
General		
Service		Wastewater
Basic Material & Reference Standard		SS 316L ASTM A778
Ends		BW
Pressure rating		1,050 kPa (150 psi)
Size Range		75-600 mm
Temperature rating		60 deg C
Test Condition		1,560 kPa (225 psi) for 120 minutes
Item	**Sizes**	**Specification**
Pipe	75-600 mm	Schedule 10S 316L stainless steel to ASTM A778.
Joints	75-600 mm	Full-penetration butt weld.
Fittings	General	316L stainless steel to A774, fabricated fittings as shown, except as noted.
Elbows	75-350 mm	Smooth design, pressed type, welded.
Elbows	400-600 mm	Mitred design, with 90° elbows having at least 5 sections and 45° elbows having at least 3 sections.
Flanges	General	Flanges to be full flat-faced.
Stub-ends	75-300 mm	Pressed, flared type, 10 Ga. (3.6 mm) wall thickness.
Stub-ends	350-600 mm	Rolled type from angle material with wall thickness at least equal to pipe of the same diameter.
Backing Flanges	General	Galvanized carbon steel, drilled to Class 150, B16.1 dimensions, minimum thickness as follows:
	75-200 mm 250-300 mm 350-400 mm 450-500 mm	20 mm 25 mm 29 mm 32 mm
Flange Gaskets		Black neoprene to ANSI B16.21
Coating (exterior)	General	None
Lining (interior)	General	None
Insulation	General	None
Couplings	100-300 mm	GF Piping Systems Multi Joint restrained coupling type 3007.
Flange Adaptor Couplings	100-300 mm	GF Piping Systems Multi Joint restrained flange adaptor type 3057.

END OF SECTION

Seal #1	Seal #2	Seal #3
Michael Scopick, P.Eng. PBX Engineering Ltd. Division 26 Specifications Permit to Practice: 1000208 (refer to Specifications section 26 05 00 Common Work Results – Electrical, for relevant specification sections)		

NOTES:

Each Engineer that has applied a seal above shall indicate which sections of the specifications he or she is certifying and the engineering company they work for. Alternatively, the Engineer may indicate which engineering discipline he or she is certifying as long as the name of the engineering company they work for (the source) is shown on the applicable technical specifications.

TABLE OF CONTENTS

Part 1 General 3
1.0 Documents 3
1.1 Related Sections 3
1.2 Regulatory Requirements 4
1.3 Technical Specification Includes 4
1.4 Scope 5
1.5 Materials Supplied by Others 6
1.6 Removal of Redundant Material and Equipment 7
1.7 Definitions 7
1.8 Drawings, Measurements, and Notations 9
1.9 Responsibility and Coordination 9
1.10 Common Product Requirements 11
1.11 Testing, Operation and Set-Up 12
1.12 Permits, Fees, and Inspections 12
1.13 Evaluation of Contract Changes 12
1.14 Measurement and Payment 12
1.15 Review of Work 12
1.16 Scheduling of Work 12
1.17 Action and Informational Submittals 12
1.18 Shop Drawings 12
1.19 Closeout Submittals 14
1.20 As-Built Documents and Samples 14
1.21 Operation and Maintenance Manual 17
1.22 Delivery, Storage, and Handling 20
1.23 Quality Assurance 20
1.24 Safety and Precaution 20
1.25 Care, Operation, and Start-up 21
1.26 Approvals 21
Part 2 Products 23
2.0 Design Requirements 23
2.1 Materials and Equipment 23
2.2 Electric Motors, Equipment and controls 23
2.3 Warning Signs 24
2.4 Wiring Terminations 24

2.5 Equipment Identification 24
2.6 Wiring Identification 25
2.7 Conduit and Cable Identification 25
2.8 Finishes 25
Part 3 Execution 25
3.0 Examination 25
3.1 Installation 25
3.2 Namplates and Labels 26
3.3 Conduit and Cable Installation 26
3.4 Mounting Heights 26
3.5 Co-ordination of Protective Devices 26
3.6 Field Quality Control 26
3.7 Substantial Performance Review 26
3.8 System Start-up 27
3.9 Cleaning 27

Revision History

Rev. No.	Date	Description of Revisions	Prep. By	Rev. By
-	May 29, 2026	Issued for Tender	JB	MS

Part 1 General

1.0 DOCUMENTS

.1 This Technical Specification forms part of the Contract Documents and is to be read, interpreted, and coordinated with all other parts.

1.1 RELATED SECTIONS

.1 Technical Specification 26 00 01 Certification Page for Technical Specifications

.2 Technical Specification 26 05 02 Seismic Restraint

.3 Technical Specification 26 05 10 Testing and Commissioning

.4 Technical Specification 26 05 20 Wire and Box Connectors (0-1000V)

.5 Technical Specification 26 05 21 Wires and Cables (0-1000V)

.6 Technical Specification 26 05 28 Grounding - Secondary

.7 Technical Specification 26 05 29 Hangers and Supports for Electrical Systems

.8 Technical Specification 26 05 31 Splitters, Junction, Pull Boxes and Cabinets

.9 Technical Specification 26 05 32 Outlet Boxes, Conduit Boxes and Fittings

.10 Technical Specification 26 05 34 Conduits, Conduit Fastenings and Conduit Fittings

.11 Technical Specification 26 05 43 01 Installation of Cables in Trenches and in Ducts

.12 Technical Specification 26 05 80 Fractional Horsepower Motors

.13 Technical Specification 26 05 81 Motors 0.746 to 149kW

.14 Technical Specification 26 09 24 Lighting Control Devices – Low Voltage

.15 Technical Specification 26 12 16 01 Dry Type Transformers up to 600V Primary

.16 Technical Specification 26 24 01 Service Equipment

.17 Technical Specification 26 24 02 Service Entrance Board

.18 Technical Specification 26 24 05 Switchboard TVSS Protection

.19 Technical Specification 26 24 16 01 Panelboards Breaker Type

.20 Technical Specification 26 27 16 Electrical Cabinets and Enclosures

.21 Technical Specification 26 27 17 Programmable Logic Controller

.22 Technical Specification 26 27 26 Wiring Devices

.23 Technical Specification 26 28 16 02 Molded Case Circuit Breakers

.24 Technical Specification 26 28 23 Disconnect Switches – Fused and Non-Fused

.25 Technical Specification 26 29 03 Control Devices

.26 Technical Specification 26 29 04 Transmitters and Indicators

.27 Technical Specification 26 29 05 Data Communications Infrastructure

.28 Technical Specification 26 29 23 11 Variable Frequency Drive

.29 Technical Specification 26 32 13 01 Power Generation Diesel

.30 Technical Specification 26 33 53 Static Uninterruptable Power Supply

.31 Technical Specification 26 36 23 Automatic Transfer Switches

.32 Technical Specification 26 50 00 Lighting

.33 Technical Specification 26 54 00 Heaters and Ventilation

1.2 REGULATORY REQUIREMENTS

.1 Definitions:

.1 Electrical and electronic terms: unless otherwise specified or indicated, terms used in this Technical Specification, and on Contract Drawings, are those defined by IEEE SP1122.

.2 Reference Standards:

.1 Canadian Standards Association (CSA International)

.1 CSA C22.1, Canadian Electrical Code, Part 1, Current Edition.

.2 CSA C22.2 No. 1-10, General Requirements - Canadian Electrical Code, Part 2.

.3 CAN3-C235-83, Preferred Voltage Levels for AC Systems, 0 to 50,000 V.

.2 Institute of Electrical and Electronics (IEEE)/National Electrical Safety Code Product Line (NESC)

.1 IEEE SP1122-2000, The Authoritative Dictionary of IEEE Standards Terms, 7th Edition.

.3 Health Canada / Workplace Hazardous Materials Information System (WHMIS)

.1 Material Safety Data Sheets (MSDS).

1.3 TECHNICAL SPECIFICATION INCLUDES

.1 This Technical Specification covers items common to the Divisions 26 Technical Specifications. This Technical Specification supplements requirements of Division

.2 This Technical Specification 26 05 00 refers to those portions of the Work that are

unique to the supply and installation of all electrical, control, and instrumentation and related appurtenances. This Technical Specification must be referred to and interpreted simultaneously with all other Technical Specifications pertinent to the works described herein.

1.4 SCOPE

.1 This project involves the construction of a sewage pumping station located in Langford, BC.

.2 The electrical scope of the pump station includes, but is not limited to, the following items of work:

- .1 Coordination with BC Hydro and supply and installation of new BC Hydro 347/600V 3 Phase, 100A service, including service disconnect and meter socket.
  - .1 Division of Contractor and BC Hydro scope as described herein.
- .2 Trenching and backfilling for underground electrical duct work.
- .3 Supply and installation of underground electrical conduits.
- .4 Supply and installation of electrical grounding systems.
- .5 Supply and installation of electrical kiosk equipped with electrical, controls, and power distribution equipment.
- .6 Supply and installation of electrical equipment within the wet well.
- .7 Supply and installation of electrical equipment in valve kiosk.
- .8 Supply and installation of site luminaire, including lighting pole, arm, and luminaire. Site luminaire shall be in accordance with City of Langford standards.
- .9 Installation standby diesel generator per Contract Drawings and Technical Specification 26 32 13 01 - Power Generation Diesel.
- .10 Provide testing and commissioning of the electrical services and systems provided under the Contract Documents.
- .11 Providing electrical commissioning of external control and power facilities for the standby generator power system, including:
  - .1 Adjusting settings on electronic trip circuit breakers
  - .2 Commissioning of automatic transfer switch with standby generator, including confirmation of status alarm annunciation
  - .3 Commissioning of 120V power systems for generator battery charging and heating
  - .4 Coordinate commissioning schedule and activities with

generator manufacturer.

.12 Provide electrical assistance during the commissioning of the PLC, HMI, and SCADA system.

.13 Provide programming and testing services for miscellaneous items including VFDs, electronic breakers and other configurable components.

.14 Provide all permits, licenses and fees required by applicable Governmental Authorities having jurisdiction.

.15 All work described herein shall be performed by qualified personnel.

.16 Provide seismic engineering and associated materials and equipment as described herein.

.17 Provide vibration isolation equipment and materials including seismic restraints and anchoring.

.18 Preparation of operations and maintenance manuals.

.19 Provision of training for the operation and maintenance teams.

1.5 MATERIALS SUPPLIED BY OTHERS

.1 Generator will be supplied by the Owner for installation by the Contractor.

.2 Telecommunications modem and router/firewall will be supplied by the Owner for installation by the Contractor.

.3 Supply and install responsibility of Telecommunications-related infrastructure is indicated below and shown on Contract Drawings:

.1 Equipment ‘supplied’ by Telecommunications Provider shall be picked up and delivered to the Site by the Contractor.

.2 Telecommunication construction costs will be paid for by the Owner.

.3 Work to be performed in according with telecommunication provider’s installation standards.

.4 Telecommunications Junction Boxes supplied by telecommunications provider, installed by Contractor.

.5 Telecommunications service conduits supplied and installed by Contractor.

.1 Telecommunications conductors supplied and installed by Shaw or Telus.

.6 Utility Pole

.1 Mechanical guard supplied by telecommunication provider, installed by Contractor.

.2 Pilaster supplied by telecommunication provider, installed by Contractor.

.4 Supply and install responsibility of BC Hydro-related infrastructure is indicated below and shown on Contract Drawings:

.1 Equipment 'supplied' by BC Hydro shall be picked up and delivered to the Site by the Contractor.

.2 BC Hydro construction costs will be paid for by the Owner.

.3 Work to be performed in according with BC Hydro underground engineering standards series ES53 and ES54.

.4 Utility Pole

.1 Mechanical guard supplied by BC Hydro, installed by Contractor.

.2 Pilaster supplied by BC Hydro, installed by Contractor.

.5 Secondary service conduits supplied and installed by Contractor.

.1 Secondary service conductors supplied and installed by BC Hydro.

.6 Secondary service metering

.1 Meter socket supplied and installed by Contractor.

.2 Meter supplied and installed by BC Hydro.

1.6 REMOVAL OF REDUNDANT MATERIAL AND EQUIPMENT

.1 No removal of redundant material and equipment is planned for the Works.

1.7 DEFINITIONS

.1 The word 'Install' means the Supply, delivery, and installation of device or equipment referenced to the level required to be complete and operational including unloading, unpacking, assembling, erecting, applying, finishing, protecting, and cleaning.

.2 The word 'Supply' means to obtain and deliver to the Site, ready for unpacking, assembly, and installation.

.3 AHJ: Governmental Authority having jurisdiction.

.4 Schematic or Elementary Diagram

.1 A schematic (elementary) diagram shows, by means of graphic symbols, the electrical connections and functions of a specific circuit arrangement. The schematic diagram facilitates tracing the circuit and its functions without regard to the actual physical size, shape, or location of the component devices or parts.

.5 Single-Line Diagram

.1 A single-line diagram shows, by means of single lines and graphical symbols, the course of an electrical circuit or system of circuits and the components, devices or parts used therein. Physical relationships are usually disregarded.

.6 Block Diagram

.1 A block diagram is a diagram of a system, instrument, computer, or program in which selected portions are represented by annotated boxes and interconnecting lines.

.7 Wiring Diagram or Connection System

.1 A wiring or connection diagram includes all of the devices in a system and shows their physical relationship to each other including terminals and interconnecting wiring in an assembly. This diagram may be (a) in a form showing interconnecting wiring only by terminal designation (wireless diagram), or (b) by panel layout diagram showing the physical location of devices plus the elementary diagram.

.8 Interconnection Diagram

.1 An interconnection diagram shows all external connections between terminals of equipment and outside points, such as motors and auxiliary devices. References shall be shown to all connection diagrams which interface to the interconnection diagrams. Interconnection diagrams shall be of the continuous line type. Bundled wires shall be shown as a single line with the direction of entry/exit of the individual wires clearly shown. Wireless diagrams and wire lists are not acceptable. Each wire identification as actually installed shall be shown. The wire identification for each end of the same wire shall be identical. All devices and equipment shall be identified. Terminal blocks shall be shown as actually installed and identified in the equipment complete with individual terminal identification. All jumpers, shielding and grounding termination details not shown on the equipment connection diagrams shall be shown on the interconnection diagrams. Wires or jumpers shown on the equipment connection diagrams shall not be shown again on

the interconnection diagram. Signal and DC circuit polarities and wire pairs shall be shown. Spare wires and cables shall be shown.

.9 Arrangement, Layout, or Outline Drawings

.1 An arrangement, layout, or outline drawing is one which shows the physical space and mounting requirements of a piece of equipment. It may also indicate ventilation requirements and space provided for connections or the location to which connections are to be made.

1.8 DRAWINGS, MEASUREMENTS, AND NOTATIONS

.1 Contract Drawings are generally diagrammatic and are intended to indicate the scope and general arrangement of work.

.2 The Contract Drawings show approximate locations of equipment and apparatus, but the right is reserved to make such changes in location before installation or performance of the work as may be necessary to meet the exigencies of construction in any way. No extra will be allowed and conversely, no credit shall be expected for such changes unless for each item of work the distance moved exceeds 3m prior to final installation of same.

.3 Take field measurements where equipment and material dimensions are dependent upon building dimensions.

.4 The Contractor shall supply and install all electrical equipment. Standard notations are used on the Contract Drawings to assist the Contractor in identifying what work needs to be done. These standard notations are defined as follows:

.1 “All equipment is proposed unless noted otherwise” – This notation is used on Contract Drawings where the majority of the equipment on the drawing is to be supplied and installed by the Contractor. The notation means that the Contractor shall perform all work shown on the Contract Drawing except for equipment shown as existing (i.e. to remain).

.2 “All equipment is existing unless noted otherwise”: - This notation is used on Contract Drawings where the majority of the equipment is existing. The notation means that the Contractor shall perform only the Work identified on the Contract Drawings.

1.9 RESPONSIBILITY AND COORDINATION

.1 Provide all labour, materials, equipment, tools, and incidentals necessary to provide a complete electrical installation as indicated on the Contract Drawings and as set out in these Technical Specifications.

.2 Without relieving the Contractor of his responsibilities, the Technical Specifications

have been divided into approximate trade sections for convenience. The use of these sections do not, however, limit the responsibility of the Contractor or any Subcontractor or Supplier. The onus of defining the extent of the Subcontractors' work remains with the Contractor, who, when awarding subcontracts, will ensure that the area of responsibility of any particular Subcontractor is set out in full detail.

.3 The Contractor shall advise the Contract Administrator of any specified material or equipment which is either no longer available from manufacturers or whose delivery is likely to exceed the requirements of the anticipated Work Schedule. Failure of the Contractor to perform the above shall cause the Contractor to supply, at his own expense, alternate material or equipment as selected by the Contract Administrator at a later date. Alternatively, the Contractor shall procure the specified material or equipment at his own additional expense by means of air freight or other special means of transportation.

.4 Advise the Contract Administrator of any specified equipment, material, or installation of same which appears inadequate or unsuitable or which is in violation of Laws, ordinances, rules, or regulations of Governmental Authorities having jurisdiction. Provide all labour and materials which are obviously necessary or reasonably implied to be necessary to complete the work as if the work was shown on the Drawings and/or described in the Specifications.

.5 Check drawings of all trades and coordinate the installation of all material and equipment to ensure adequate space and free access and to maintain headroom limitations for all proposed and indicated future work. Work out jointly, with all Subcontractors on the Site, solutions to interference problems. Coordinate all work before fabricating or installing any material or equipment. It is incumbent on all Subcontractors on the Site to ensure that all materials and equipment fit into the allocated spaces and that all equipment can be properly inspected, serviced, and replaced if and when required. Advise the Contract Administrator of space problems before fabricating or installing any material or equipment. Demonstrate to the Contract Administrator on completion of its work that all equipment and material installed by the Contractor can be properly and safely serviced and replaced. Make no deviations from the intent of the design, or any involving additional cost, without the Contract Administrator's written direction.

.6 Ensure that any building structure loaded during the installation is adequate to carry such load.

.7 A contractor is entitled to engage in the regulated work for which the contractor is licensed.

.1 A licensed contractor must not:

.1 Manage or do regulated work that is:

.1 Outside the scope of the license,

.2 Contrary to any term or condition of the license, or

.3 Contrary to any term or condition imposed by the regulations on the use of the license, or

.2 Permit regulated work to be undertaken by persons under the control of the licensed contractor if they are not authorized.

.2 A licensed contractor must:

.1 Maintain current knowledge of the Applicable Laws, relevant regulations, relevant directives, relevant safety orders and any other relevant material that the minister makes publicly available, and

.2 Ensure that individuals who do regulated work for the licensed contractor maintain similar current knowledge.

1.10 COMMON PRODUCT REQUIREMENTS

.1 All products and warranties shall be registered in the Owner's name.

.2 Products shall be purchased through authorized supply chains to ensure that all warranties and technical support remain valid in British Columbia following installation of the products.

.3 Any products installed that had their warranties or technical support voided for any reason shall be replaced at the Contractor's expense with an identical replacement product that has a valid warranty in British Columbia. Any resulting costs from complications that require remediation from products with voided warranties or technical support shall be borne solely by the Contractor to make the Work good.

.4 Contractor is responsible to ensure that all products are purchased from the OEM or an OEM authorized supply chain/channel such as an authorized distributor or reseller. Any non-OEM products installed shall be replaced at the Contractor's expense, even if non-OEM products are discovered after completion of the project. Any resulting costs from complications that require remediation from the use of non-OEM products shall be borne solely by the Contractor to make the Work good.

.5 Defective products, whenever identified prior to completion of Work, will be rejected, regardless of previous inspections or field reviews. Inspection does not relieve responsibility, but is precaution against oversight or error. Contractor to remove and replace defective products at own expense and is responsible for any delays and expenses caused by rejection.

.6 Contractor shall provide letters of assurance from the OEM manufactures identified throughout the specifications which assure that the products purchased as part of the project were purchased through an OEM authorized channel and that the products are new.

.1 Details on required letters of assurance from OEM manufacturers are provided in Section 1.19 Closeout Submittals.

1.11 TESTING, OPERATION AND SET-UP

.1 Testing in accordance with Technical Specification 26 05 10 Testing and Commissioning.

1.12 PERMITS, FEES, AND INSPECTIONS

.1 Before commencing work obtain and pay for all necessary approvals and permits. The Contract Administrator shall provide any documents required by the Authority Having Jurisdiction to obtain such permits.

.2 Arrange for inspection of the work at rough-in completion, prior to Substantial Completion, and as otherwise required by all applicable Authorities Having Jurisdiction.

.1 Notify Contract Administrator of any changes required by the Authorities Having Jurisdiction prior to proceeding with changes.

.3 Provide Contract Administrator with a certificate of unconditional approval for all electrical work from the appropriate Authorities Having Jurisdiction. Final payment to the Contractor shall not be made prior to submission of the inspection certificate.

1.13 EVALUATION OF CONTRACT CHANGES

.1 In accordance with Division 1 specifications.

1.14 MEASUREMENT AND PAYMENT

.1 In accordance with Division 1 specifications.

1.15 REVIEW OF WORK

.1 In accordance with Division 1 specifications.

1.16 SCHEDULING OF WORK

.1 Work shall be scheduled as required to coordinate with other Divisions and Owner’s work restrictions.

1.17 ACTION AND INFORMATIONAL SUBMITTALS

.1 In accordance with Division 1 specifications.

1.18 SHOP DRAWINGS

.1 Provide digital copies of shop drawings in PDF format. Organize and separate shop drawings per Technical Specification for review.

.1 Equipment unrelated to the current submittal will be not be reviewed.

.2 The Shop Drawing will be retained by the Contract Administrator for their office use and a copy will be marked and returned to the Contractor for correction if necessary, further reproduction, and distribution as required.

.3 Accompany submissions with transmittal letter, containing:

.1 Date.

.2 Project title and number.

.3 Contractor's name and address.

.4 Identification and quantity of each shop drawing, product data and sample.

.5 Other pertinent data.

.4 Where specifically noted in other Technical Specifications in Division 26, submit drawings stamped and signed by Professional Engineer registered or licensed in British Columbia, Canada.

.5 Contractor shall review all Shop Drawings prior to submittal. All Shop Drawings shall be stamped and signed by the electrical Subcontractor engaged by the Contractor. Unstamped drawings will be marked “re-submit” (R3) without comment.

.6 All Shop Drawings shall use metric dimensions. Scaled drawings shall use metric scale.

.7 Each Shop Drawing shall clearly indicate the equipment ID and equipment type (e.g. Luminaire Type ‘A’, Panelboard SD-A) where applicable.

.8 Where manufactures’ brochures that include multiple equipment or device models are submitted, they shall be clearly labelled with the equipment model and options to be supplied. Submit relevant sections of manufacturer’s catalogues only. Submissions of complete catalogues will be rejected.

.9 Submit wiring diagrams and installation details of equipment indicating proposed location, layout and arrangement, control panels, accessories, piping, ductwork, and other items that must be shown to ensure co-ordinated installation.

.10 Identify on wiring diagrams circuit terminals and indicate internal wiring for each item of equipment and interconnection between each item of equipment.

.11 Indicate on Shop Drawings clearance requirements for: operation, maintenance, and replacement of operating equipment devices.

.12 Submit complete Shop Drawing packages for each system. Partial submissions will be returned without comment.

.13 Review of Shop Drawings by the Contract Administrator is for the sole purpose of ascertaining conformance with the general design intent. The review shall not mean approval of the detail design inherent in the Shop Drawings, responsibility for which shall remain with the Contractor submitting same, and such review shall not relieve the Contractor of its responsibility for errors or omissions in the Shop Drawings or of its responsibility for meeting all requirements of the Contract Documents. The Contractor is responsible for dimensions to be confirmed and correlated at the job site, for information that pertains solely to fabrication processes or to techniques of construction and installation and for coordination of the work of all sub-trades.

.14 Ensure that copies of all accepted Shop Drawings are available at the job site.

1.19 CLOSEOUT SUBMITTALS

.1 Provide spare parts, maintenance materials and special tools of same quality and manufacture as products provided in Work.

.2 Operation and Maintenance Manuals:

.1 Provide draft version of Operations and Maintenance Manual to Contract Administrator two weeks prior to Substantial Performance Review.

.3 Upon completion of all electrical, control, and instrumentation work, submit Record Drawings, including all as-built information and changes.

.4 Manufacturer Letters of Assurance: Contractor shall provide letters of assurance from the following manufactures identified throughout the specifications which assure that the products purchased as part of the project were purchased through an OEM authorized channel and that the products are new:

.1 Axis Communications

.2 Cisco Systems

.3 Genetec

.4 BCD Video

.5 Dell Technologies

1.20 AS-BUILT DOCUMENTS AND SAMPLES

.1 Maintain at Site for Contract Administrator one record copy of:

.1 Contract Drawings.

.2 Specifications.

.3 Addenda.

.4 Change Orders and other modifications to Contract.

.5 Reviewed shop drawings, product data, and samples.

.6 Field test records.

.7 Inspection certificates.

.8 Manufacturer's certificates.

.2 Store record documents and samples in field office apart from documents used for construction in secure location.

.3 Label record documents and file in accordance with section number listings in list of contents of this project manual.

.4 Maintain record documents in clean, dry and legible condition.

.1 Do not use record documents for construction purposes.

.5 Keep record documents and samples available for inspection by Contract Administrator.

.6 Obtain and pay for three sets of white prints. As the project progresses, mark these prints to accurately indicate installed work. Have the white prints available for inspection at the Site at all times and present for scrutiny at each project meeting.

.7 Show on the Record Drawings the installed inverts of all services entering and leaving the building and the property. Dimension underground services at key points of every run in relation to the structure and building.

.8 Indicate exact location of all services for future work. Show and dimension all work embedded in the structure.

.9 Maintain in the site office in up-to-date condition, one (1) complete set of whiteprints of each of the electrical Contract Drawings and one (1) set of Technical Specifications, including revisions to the Contract Drawings, marked clearly and indelibly in red, indicating as-built conditions where such conditions deviate from the original directions of the Contract Documents, and indicating final installation of feeders and branch circuits.

.10 ”As-Built” markings shall include the following:

.1 All changes in circuiting.

.2 Size and routing of all conduits for branch circuits including power, lighting, and systems. Note that branch circuit wiring is generally not shown on Contract Drawings. Accurately record on "As-Built" drawings the size and routing of all installed raceways and cables.

.3 Number and size of conductors in raceways and cables

.4 Location of all junction and pull boxes

.5 Location of all access panels

.6 Location of all conduit or duct stubs, installed equipment, devices, and fixtures

.7 All changes to electrical installation resulting from Addenda, Change Orders, and Field Instructions (Architectural / Engineering Instructions)

.8 Exact location of all services left for future work

.9 Location by accurate horizontal and vertical dimensions of the routes and terminations of all raceways and cables installed underground beyond the building.

.10 Exact labeling of each communication system cable at each data outlet location. Locate label numbers adjacent each communication outlet indicated on Contract Drawings. Label numbers to match those at the communication room cable end.

.11 Where extensive changes have been made to an area to the point where it is not practical to update the original Contract Drawing, the area in question shall be enclosed with a heavy dotted line and reference made to the applicable Change Order, Instruction, and/or associated Revision Drawing.

.12 For each and every "As-Built" drawing, reference shall be neatly drawn inside the framed space above the title block, listing all Contemplated Change Orders, Instructions, and Revision Drawing Numbers applicable to the particular "As-Built" drawing in question.

.13 Each "As-Built" drawing as defined above shall bear the Contractor's identification and signature, the date of record, and the notation: "We hereby certify that these drawings represent the work as built."

.14 All Addenda and Revision Drawings not having their details transferred onto the submitted "As-Built" drawings shall be included in the submission using the same drawing format as previously described.

.11 Recording Information on Project Record Documents.

.1 Record information on set of Contract Drawings.

.2 Use felt tip marking pens, maintaining separate colours for each major system, for recording information.

.3 Record information concurrently with construction progress.

.1 Do not conceal Work until required information is recorded.

.4 Contract Drawings and Shop Drawings: mark each item to record actual construction, including:

.1 Changes made by Change Orders.

.2 Details not on original Contract Drawings.

.3 References to related Shop Drawings and modifications.

.5 Specifications: mark each item to record actual construction, including:

.1 Manufacturer, trade name, and catalogue number of each product actually installed, particularly optional items and substitute items.

.2 Changes made by Addenda and Change Orders.

.6 Other Documents: maintain manufacturer's certifications, inspection certifications, field test records, as required by Technical Specifications.

.7 Provide digital photos, if requested, for site records.

1.21 OPERATION AND MAINTENANCE MANUAL

.1 Submission:

.1 Prepare instructions and data using personnel experienced in maintenance and operation of described products.

.2 Copy will be returned after final inspection, with Contract Administrator's comments.

.3 Revise content of documents as required prior to final submittal.

.4 As a condition of Substantial Completion submit to the Contract Administrator, four final copies of operating and maintenance manuals in English.

.5 Ensure spare parts, maintenance materials and special tools provided are new, undamaged or defective, and of same quality and manufacture as products provided in Work.

.6 If requested, furnish evidence as to type, source and quality of products provided.

.7 Defective products will be rejected, regardless of previous inspections. The Contractor shall replace products at their own expense, with no increase to the Contract Price.

.8 Pay costs of transportation.

.2 Format

.1 Organize data in the form of an instructional manual.

.2 Provide a digital copy of the O&M manual in PDF format.

.3 Arrange content by systems under Technical Specification numbers and sequence of Table of Contents.

.4 Provide organized digital bookmarks for content by systems under Technical Specification Numbers and sequence of Table of Contents.

.3 Contents – Each Volume:

.1 Table of Contents: provide title of Project;

.1 Date of submission; names,

.2 Addresses, and telephone numbers of Engineer and Contractor with name of responsible parties;

.3 Schedule of products and systems, indexed to content of volume.

.2 For each product or system:

.1 List names, addresses and telephone numbers of Subcontractors and Suppliers, including local source of supplies and replacement parts.

.3 Product Data

.1 Mark each sheet to clearly identify specific products and component parts, and data applicable to installation; delete inapplicable information.

.4 Drawings

.1 Supplement product data to illustrate relations of component parts of equipment and systems, to show control and flow diagrams.

.5 Typewritten Text

.1 As required to supplement product data. Provide logical sequence of instructions for each procedure, incorporating manufacturer's instructions.

.6 Guarantees, Warrantees and Bonds

.1 Separate each warranty or bond with index tab sheets keyed to Table of Contents listing.

.2 List Subcontractor, Supplier, and manufacturer, with name,

address, and telephone number of responsible principal.

.3 Obtain warranties and bonds, executed in duplicate by Subcontractors, Suppliers, and manufacturers, within ten days after completion of the applicable item of work.

.4 Except for items put into use with Owner's permission, leave the date of when the warranty begins blank until the Substantial Completion Date is determined. The beginning date of the warranty will then be updated to state the Substantial Completion Date.

.5 Verify that documents are in proper form, contain full information, and are notarized.

.7 Equipment and Systems:

.1 Each Item of Equipment and Each System: include description of unit or system, and component parts. Give function, normal operation characteristics, and limiting conditions. Include performance curves, with engineering data and tests, and complete nomenclature and commercial number of replaceable parts.

.2 Panel board circuit directories: provide electrical service characteristics, controls, and communications.

.3 Include installed colour coded wiring diagrams.

.4 Operating Procedures: include start up, break-in, and routine normal operating instructions and sequences. Include regulation, control, stopping, shut down, and emergency instructions. Include summer, winter, and any special operating instructions.

.5 Maintenance Requirements: include routine procedures and guide for trouble shooting; disassembly, repair, and reassembly instructions; and alignment, adjusting, balancing, and checking instructions.

.6 Provide servicing and lubrication schedule, and list of lubricants required.

.7 Include manufacturer's printed operation and maintenance instructions.

.8 Include sequence of operation by controls manufacturer.

.9 Provide original manufacturer's parts list, illustrations, assembly drawings, and diagrams required for maintenance.

.10 Provide installed control diagrams by controls manufacturer.

.11 Provide list of original manufacturer's spare parts, current prices, and recommended quantities to be maintained in storage.

.12 Additional requirements: As specified in the Contract Documents.

1.22 DELIVERY, STORAGE, AND HANDLING

.1 Delivery and Acceptance Requirements: deliver materials to Site in original factory packaging, labelled with manufacturer's name and address.

.2 Storage and Handling Requirements:

.1 Store materials in accordance with manufacturer's recommendations in clean, dry, well-ventilated area.

.1 Except for equipment intended for installation outdoors, store equipment indoors in dry location.

.2 Store and protect equipment and materials from nicks, scratches, and blemishes.

.3 Replace defective or damaged materials with new.

.3 Packaging Waste Management: remove and dispose of all packaging waste materials.

.1 Where possible, return packaging materials to supplier for re-use.

.2 Divert all recyclable materials from landfill.

1.23 QUALITY ASSURANCE

.1 Quality Assurance: in accordance with the Contract and the Division 1 Technical Specifications.

.2 Qualifications: electrical work to be carried out by qualified, licensed electricians who hold valid Master Electrical Contractor license or apprentices in accordance with authorities having jurisdiction as per the conditions of Electrical Safety Regulation within the Electrical Safety Act and the Building Code and By-Laws.

.1 Employees registered in provincial apprentices' program: permitted, under direct supervision of qualified licensed electrician, to perform installation tasks.

.2 Submit list showing names and qualifications of key supervisory personnel.

1.24 SAFETY AND PRECAUTION

.1 Safety practices shall include the following requirements:

.1 Compliance with safety requirements provided in the Contract Documents

.2 Workers' Compensation Board Regulations

.3 Municipal By-Laws

.4 Canadian Electrical Code

.5 Electrical Safety Act of BC

.6 Municipal, Provincial and Canadian Building Code

.2 Tests shall be performed with apparatus de-energized unless otherwise specified (e.g., rotation, phasing).

.3 Power circuits shall have conductors shorted to ground by an approved hotline grounded device.

.4 In all cases, work shall not proceed until the Contractor's safety representative has determined that it is safe to do so.

.5 The Contractor shall have sufficient protective barriers and warning signs available, where necessary, to conduct specified tests safely.

.6 The Project safety procedures shall be reviewed and accepted by the Contractor and all sub-trades.

1.25 CARE, OPERATION, AND START-UP

.1 Instruct Contract Administrator and operating personnel in the operation, care and maintenance of systems, system equipment and components.

.2 Provide these services for such period, and for as many visits as necessary to put equipment in operation, and ensure that operating personnel are conversant with all aspects of its care and operation.

1.26 APPROVALS

.1 Without limiting or restricting the contents of the Contract Documents, requests for approval of the substitution of materials pertaining to electrical work must be submitted to the Contract Administrator and the Owner in accordance with the Review Procedure.

.2 All submissions shall include the following information:

.1 Name and identification of specified item.

.2 Manufacturer, brand name, and catalogue number of the alternative item proposed.

.3 Detailed technical data and characteristics of alternative item such as dimensions, voltage, power requirements, performance characteristics, etc.

.4 Request for lighting fixture substitutions must be followed by photometric data and Shop Drawings.

.5 A list of any and all changes to the installation which may be required as a result of the substitution.

.3 Materials, equipment, apparatus, light fixtures, or other products specified by manufacturers' brand name, type, or catalogue number are so specified in one of two ways:

.1 Specified item followed by the words “or equal” or “approved equal” or preceded by the words “equivalent to” or “equal to”; when the Technical Specification is so worded, it is intended to establish a specific standard of quality and style but the item may be substituted for, provided the Contract Administrator provides its written approval. It is the responsibility of the Contractor to assure the Contract Administrator that all features of the specified items are supplied as part of the substitute item. If the Contract Administrator does not provide its written approval for a substitute item, the item shall be supplied precisely as specified in the Contract Documents.

.2 Specified items not followed or preceded by any such qualifying phrases: When the Technical Specification is so worded, the item shall be supplied as specified and no approved equals or equivalents will be allowed.

.4 Review by the Contract Administrator of alternate materials as permitted above is only a general approval in principal and shall not relieve the Contractor of its responsibility to ensure that any approved alternate materials perform in the same manner and with the same intent as the originally specified material would have otherwise performed.

.5 Where such substitutions alter the design or space requirements indicated on the Contract Drawings, include all material, labour, design, and engineering costs for the revised design and construction including costs of all other trades affected and those incurred by the Owner and Contract Administrator.

.6 It is the Contractor's responsibility to ensure substituted products are approved and that Suppliers have written approval indicating conditions of any such approval. Alternate manufacturers who do not have such approval shall not be used in the work. If requested by the Contract Administrator, the Contractor for Division 26 shall submit for inspection, samples of both the specified and the proposed substitute items on short notice.

Part 2 Products

2.0 DESIGN REQUIREMENTS

.1 Operating voltages: to CAN3-C235.

.2 Motors, electric heating, control and distribution devices and equipment to operate satisfactorily at 60 Hz within normal operating limits established by above standard.

.1 Equipment to operate in extreme operating conditions established in above standard without damage to equipment.

.3 Language operating requirements: provide identification nameplates for control items in English.

2.1 MATERIALS AND EQUIPMENT

.1 Equipment and material shall be new and certified by a certification body accredited by the Standards Council of Canada (SCC). Where there is no alternative to supplying equipment which is not certified, obtain special approval and pay all associated fees. Notify Contract Administrator prior to supplying material that is not SCC approved.

.2 Factory assemble control panels and component assemblies.

.3 Substitution of Products

.1 After acceptance of the list of products, no substitution of any item will be permitted unless the approved item cannot be delivered in time to comply with the work schedule and the Contract Administrator accepts the change in items.

.2 To receive acceptance, proposed substitutes must equal or exceed the quality, finish and performance of those specified in the Contract Documents and/or shown in the Contract Drawings, and must not exceed the space requirements allotted on the Contract Drawings.

.3 Provide to the Contract Administrator documentary proof of equality, difference in price (if any) and delivery dates, in the form of certified quotations from suppliers of both specified items and proposed substitutions.

.4 Include costs for any required revisions to other structures and products to accommodate such substitutions.

2.2 ELECTRIC MOTORS, EQUIPMENT AND CONTROLS

.1 Verify installation and co-ordination responsibilities related to motors, equipment and controls, as indicated in the Technical Specifications and Contract Drawings.

2.3 WARNING SIGNS

.1 Warning Signs: in accordance with requirements of authority having jurisdiction and Contract Administrator.

.2 Decal signs, minimum size 175 x 250 mm.

2.4 WIRING TERMINATIONS

.1 Ensure lugs, terminals, screws used for termination of wiring are suitable for either copper or aluminum conductors.

2.5 EQUIPMENT IDENTIFICATION

.1 Identify equipment cabinets with nameplates as follows:

.1 Nameplates:

.1 Lamicoid 3 mm thick plastic engraving sheet, lettering accurately aligned and engraved into core, mechanically attached with self-tapping screws or permanent self-adhesive.

.2 Nameplate colours as follows:

.1 Normal Power Systems: black face, white core

.2 Emergency/Standby Power Systems: red face, white core

.3 Life Safety Systems: red face, white core

.4 Colours for other equipment as specified by the Contract Administrator.

.2 Sizes as follows:

NAMEPLATE SIZES			
Size 1	10 x 50 mm	1 line	3 mm high letters
Size 2	12 x 70 mm	1 line	5 mm high letters
Size 3	12 x 70 mm	2 lines	3 mm high letters
Size 4	20 x 90 mm	1 line	8 mm high letters
Size 5	20 x 90 mm	2 lines	5 mm high letters
Size 6	25 x 100 mm	1 line	12 mm high letters
Size 7	25 x 100 mm	2 lines	6 mm high letters

.2 Labels: embossed plastic labels with 6 mm high letters unless specified otherwise in the Contract Drawings.

.3 Wording on nameplates to be approved by Contract Administrator prior to manufacture.

.4 Allow for minimum of twenty-five (25) letters per nameplate.

.5 Nameplates for terminal cabinets and junction boxes to indicate system and/or voltage characteristics.

.6 Disconnects, starters and contactors: indicate equipment being controlled and voltage.

.7 Terminal cabinets and pull boxes: indicate system and voltage.

.8 Transformers: indicate capacity, primary and secondary voltages.

2.6 WIRING IDENTIFICATION

.1 Refer to Technical Specification 26 05 21 – Wires and Cables (0-1000V).

2.7 CONDUIT AND CABLE IDENTIFICATION

.1 Refer to Technical Specification 26 05 34 ‑ Conduits, Conduit Fastenings and Conduit Fittings.

2.8 FINISHES

.1 Shop finish metal enclosure surfaces by application of rust resistant primer inside and outside, and at least two coats of finish enamel.

.2 Clean and touch up surfaces of shop-painted equipment scratched or marred during shipment or installation, to match original paint.

.3 Clean and prime exposed non-galvanized hangers, racks and fastenings to prevent rusting.

.4 Repair or replace any equipment or structures damaged by the Work, to its original condition at no cost to the Owner.

Part 3 Execution

3.0 EXAMINATION

.1 Verification of Conditions: verify that conditions of substrate previously installed under other Technical Specifications are acceptable for installation in accordance with manufacturer's written instructions.

.2 Visually inspect substrate in presence of Contract Administrator.

.3 Inform Contract Administrator of unacceptable conditions immediately upon discovery.

.4 Proceed with installation only after unacceptable conditions have been remedied and after receipt of written approval to proceed from Contract Administrator.

3.1 INSTALLATION

.1 Complete installation in accordance with CSA C22.1 except where specified otherwise.

.2 Do overhead and underground systems in accordance with CAN/CSA-C22.3 No.1 except where specified otherwise in the Contract Drawings.

3.2 NAMPLATES AND LABELS

.1 Ensure manufacturer's nameplates, CSA labels and identification nameplates are visible and legible after equipment is installed.

3.3 CONDUIT AND CABLE INSTALLATION

.1 Install conduit and sleeves prior to pouring of concrete.

.1 Sleeves through concrete: schedule 40 plastic, sized for free passage of conduit, and protruding 50 mm.

.2 If plastic sleeves are used in fire rated walls or floors, remove before conduit installation.

.3 Install cables, conduits and fittings embedded or plastered over, close to building structure so furring can be kept to minimum.

3.4 MOUNTING HEIGHTS

.1 Mounting height of equipment is from finished floor to centreline of equipment unless specified or indicated otherwise in the Contract Drawings.

.2 If mounting height of equipment is not specified or indicated, verify before proceeding with installation.

3.5 CO-ORDINATION OF PROTECTIVE DEVICES

.1 Ensure circuit protective devices such as overcurrent trips, relays and fuses are installed to required values and settings.

3.6 FIELD QUALITY CONTROL

.1 Refer to Technical Specification 26 05 10 Testing & Commissioning.

3.7 SUBSTANTIAL PERFORMANCE REVIEW

.1 Prior to the Contractor submitting an Application for Substantial Completion, the Contractor will submit written confirmation that:

.1 All wiring devices, cover plates, motor controls, lighting fixtures, and other equipment are operational, plumb, clean, and correctly labelled.

.2 All distribution equipment (cabinets, panels, distribution transformers, etc.) has been cleaned and vacuumed.

.3 All test reports have been submitted.

.4 All auxiliary systems have been tested as required and are in good and proper working order.

.5 All certificates of final acceptance from the authorities having jurisdiction have been received and submitted to the Contract Administrator.

.6 Factory finished equipment has been cleaned, touched up, or refinished as necessary to present a new appearance.

.7 All sealing of conduits, cables, cable trays, wireways, etc. at wall, ceiling, and floor penetrations have been completed.

.8 All lighting fixtures including lenses and reflectors have been properly cleaned as specified in the Contract Drawings.

.9 All loose equipment including spare parts and replacement parts have been turned over to the Owner and receipts obtained for same.

.10 The operations and maintenance manuals have been submitted.

.11 All demonstrations and instructions to the Owner have been completed.

.12 Verification letter from Seismic Engineer has been submitted.

.2 Provision of the above shall not be construed as compliance with all administrative documentation required.

.3 Notwithstanding any other provisions of the Contract, failure if the Contractor fails to complete all of the requirements in this section 3.7 the Contract Administrator may refuse to issue a Certificate of Substantial Completion.

3.8 SYSTEM START-UP

.1 Arrange and pay for services of manufacturer's factory service representative to supervise start-up of installation, check, adjust, balance and calibrate components and instruct operating personnel.

.2 Provide these services for such period, and for as many visits as necessary to put equipment in operation, and ensure that operating personnel are conversant with aspects of its care and operation.

3.9 CLEANING

.1 Leave Work area clean at end of each day.

.2 Final Cleaning: upon completion remove surplus materials, rubbish, tools and equipment.

.3 Where work is performed in a phased manner, or Owner will take partial occupancy of the area of Work, perform final cleaning at the end of each Phase or prior to Owner taking occupancy of each area.

.4 Waste Management: separate waste materials for reuse and recycling.

.1 Remove recycling containers and bins from site and dispose of materials at appropriate facility.

END SECTION

TABLE OF CONTENTS

Part 1 General 2
1.0 Documents 2
1.1 Scope 2
1.2 Related Technical Specifications 3
1.3 Regulatory Requirements 3
1.4 Shop Drawings and Submittals 3
1.5 Delivery, Storage and Handling 3
Part 2 Products 3
2.0 General 3
2.1 Slack Cable Systems 4
Part 3 Execution 4
3.1 General 4
3.2 Conduits 4
3.3 Floor Mounted Equipment 5

Revision History

Rev. No.	Date	Description of Revisions	Prep. By	Rev. By
-	May 29, 2026	Issued for Tender	JB	MS

Part 1 General

1.0 DOCUMENTS

.1 This Technical Specification forms a part of the Contract Documents and is to be read, coordinated and implemented in conjunction with all other parts.

1.1 SCOPE

.1 It is the responsibility of equipment manufacturers to design their equipment so that the strength and anchorage of internal components of the equipment exceeds the force level used to restrain and anchor the unit itself to the supporting structure.

.2 Manufacturer's shop drawings to be submitted with seismic information on equipment structure, bracing and internal components and as required by the Specifications.

.3 Provide restraint on all equipment and machinery, which is part of the building electrical services and systems, to prevent injury or hazard to persons and equipment in and around the structure. Restrain all such equipment in its normal position in the event of an earthquake.

.4 The Contractor will ensure that the total electrical seismic restraint design and field review and inspection will be by a B.C. registered professional structural engineer who specializes in the restraint of building elements (the “Seismic Consultant”). Contractor to allow for coordination, provision of seismic restraints, as well as all costs for the services of the Seismic Consultant. The Seismic Consultant will provide normal engineering functions as they pertain to seismic restraint of electrical installations.

.5 The Contractor shall be aware of, and comply with, all current seismic restraining requirements and make provision for those that may come into effect during construction of the Project. Any changes in conditions will not result in an increase to the Contract Price, unless otherwise state in the Contract Documents

.6 The Seismic Consultant shall provide detailed seismic restraint installation shop drawings to the Contractor. Copies of the shop drawings to be included in the Project Binder.

.7 Provide seismic restraints on all equipment, and/or installations or assemblies, which are suspended, pendant, shelf mounted, freestanding and/or bolted to the building structure or support slabs.

.8 The Seismic Consultant shall provide inspections during and after installation. The Contractor shall correct any deficiencies in accordance with Section 21.1 of the Contract

1.2 RELATED TECHNICAL SPECIFICATIONS

.1 Technical Specification 26 05 00 Common Work Results – Electrical

.2 Technical Specification 26 05 29 Hangers and Supports for Electrical Systems

1.3 REGULATORY REQUIREMENTS

.1 Restraints shall meet the requirements of the latest edition of the British Columbia Building Code and amendments.

.2 The Contractor's seismic consultant shall submit original signed BC Building Code Letters of Assurance Schedules S-B and S-C to the Contract Administrator together with Shop Drawings submission.

.3 Importance Factor: 1.5.

.4 Use the Electrical Contractors Association of BC details in the absence of any local requirements.

.5 The above requirements shall not restrict or supplant the requirements of any Applicable Laws, including local bylaws, codes, or other certified agencies which may have jurisdiction over all or part of the installation.

1.4 SHOP DRAWINGS AND SUBMITTALS

.1 Submit in accordance with Technical Specification 26 05 00 Common Work Results – Electrical.

.2 Submit shop drawings of all seismic restraint systems including details of attachment to the structure, either tested in an independent testing laboratory or approved by the Seismic Consultant.

.3 Submit all the proposed types and locations of inserts or connection points to the building structure or support slabs. Follow the directions and recommendations of the Seismic Consultant.

1.5 DELIVERY, STORAGE AND HANDLING

.1 Deliver, store and handle materials in accordance with Technical Specification 26 05 00 Common Work Results – Electrical.

Part 2 Products

2.0 GENERAL

.1 Seismic Restraint Systems (SRS) shall be designed to avoid high impact loads.

.2 SRS shall restrain seismic forces in all directions.

.3 Fasteners and attachment points shall resist same load as seismic restraints.

.4 SRS utilizing cast iron and other brittle materials is not acceptable.

.5 Equipment assemblies required to be vibration/noise isolated shall be provided with seismic rated isolators and restraints which are certified as being rated for the specification application requirements.

.6 Seismic control measures shall not interfere with integrity of fire stopping.

2.1 SLACK CABLE SYSTEMS

.1 Slack shall prevent sway in a horizontal plane, rocking in a vertical plane, sliding and buckling in axial direction.

.2 Hanger rods shall withstand compressive loading and buckling forces.

.3 Slack cable systems to allow normal maintenance of equipment and shall not create additional hazard by their location or configurations. Contractor shall rectify any such installations at no additional cost, all to the satisfaction of the engineer and inspection authority having jurisdiction.

.4 Coordinate requirements of slack cables with suppliers prior to installation.

Part 3 Execution

3.1 GENERAL

.1 All seismic restraints systems shall conform to Governmental Authorities, including local authority having jurisdiction and all Applicable Laws and applicable code requirements.

3.2 CONDUITS

.1 Provide restraint installation information and details on conduit and equipment as indicated in Section 3.2 of this Technical Specification:

.2 Vertical Conduit

.1 Attachment - Secure vertical conduit at sufficiently close intervals to keep the conduit in alignment and carry the weight of the conduits and wiring. Stacks shall be supported at their bases and, if over 2 stories in height, at each floor by approved metal floor clamps.

.2 At vertical conduit risers, wherever possible, support the weight of the riser, at a point or points above the center of gravity of the riser. Provide lateral guides at the top and bottom of the riser, and at intermediate points not to exceed 9.2 m o.c.

.3 Riser joints shall be braced or stabilized between floors.

.3 Horizontal Conduits

.1 Supports - Horizontal conduit shall be supported at sufficiently close intervals to keep it in alignment and prevent sagging.

.4 Do not brace conduit runs against each other. Use separate support and restraint system.

.5 Support all conduits in accordance with the capability of the pipe to resist seismic load requirements indicated.

.6 Trapeze hangers may be used. Provide flexible conduit connections where conduits pass through building seismic or expansion joints, or where rigidly supported conduits connect to equipment with vibration or seismic isolators.

.7 A conduit system shall not be braced to dissimilar parts of a building or two dissimilar building systems that may respond in a different mode during an earthquake. Examples: wall and a roof; solid concrete wall and a metal deck with lightweight concrete fill.

.8 Provide large enough conduit sleeves through walls or floors to allow for anticipated differential movements with firestopping where required.

.9 The Contractor will ascertain that an appropriate size restraint device be selected for each individual piece of equipment. Submit details on Shop Drawings. The Contractor will review the Shop Drawings with Seismic Consultant and submit Shop Drawings to the Contract Administrator for their reference.

3.3 FLOOR MOUNTED EQUIPMENT

.1 Bolt all equipment, (including transformers, kiosks, switchgear, generators, motor control centres, free standing panelboards, control panels, capacitor banks) to the structure. Seismic Consultant shall design anchors and bolts.

END SECTION

TABLE OF CONTENTS

Part 1 General 2
1.0 Documents 2
1.1 Scope 2
1.2 Related Technical Specifications 3
1.3 References 3
1.4 Qualifications 4
1.5 Coordination 5
1.6 Submittals 5
1.7 Operations and Maintenance (O&M) Manuals 6
1.8 Scheduling 6
1.9 Meetings 6
1.10 Safety and Precautions 6
1.11 Test Equipment 7
Part 2 Products 7
2.0 Not Used 7
Part 3 Execution 7
3.0 Requirements 7
3.1 General testing requirements 10
3.2 System Operational Testing requirements and procedures 13
3.3 HVAC and Lighting Systems 23
3.4 Generator Systems 24
3.5 Control Systems 24
3.6 Manufacturer's Field Services: 25
3.7 Standards 26
3.8 Test Apparatus and Inspection Report 26
3.9 Demonstration 26
3.10 Training 27
3.11 System Acceptances 28

Revision History

Rev. No.	Date	Description of Revisions	Prep. By	Rev. By
-	May 29, 2026	Issued for Tender	JB	MS

Part 1 General

1.0 DOCUMENTS

.1 This Technical Specification forms a part of the Contract Documents and is to be read, coordinated and implemented in conjunction with all other parts.

1.1 SCOPE

.1 Provide testing and commissioning services and equipment to assure that all electrical equipment is operational within industry manufacturers' tolerances, calibrated per the power system studies, complies with all applicable codes, is installed in accordance with design specifications, and functions in the system in the manner designed by the Consultant.

.2 Inspections, calibrations, and acceptance tests for all equipment systems shall be performed. The inspections and testing activities shall be divided among the following groups, as specified in this Section:

.1 The original equipment manufacturer's authorized service representative shall provide special equipment, labour, and technical supervision, when required, in addition to what is supplied by the Contractor.

.2 Inspections, calibrations, and acceptance tests for equipment and systems not requiring the services of the manufacturer's representative shall be performed by the Contractor.

.3 In cases where equipment and systems require the involvement of two or all of the parties, the parties mentioned above shall coordinate and perform all inspection and testing requirements. The Contractor shall be responsible for coordination of the work and ensuring that the requirements of this Section are met.

.4 All testing and commissioning to be carried out in accordance with the terms of this Contract.

1.2 RELATED TECHNICAL SPECIFICATIONS

.1 Technical Specification 26 05 00 Common Work Results – Electrical

.2 Technical Specification 26 27 16 Electrical Cabinets and Enclosures

.3 Technical Specification 26 28 13 01 Power Generation Diesel

.4 Technical Specification 26 36 23 Automatic Transfer Switches

1.3 REFERENCES

.1 Definitions:

.1 Stage 1 – Functional Testing (By the Contractor)

.1 **"Functional Testing"** refers to the stage of testing where the Contractor and sub-contractors provide end to end testing and documentation of all pump station elements to ensure correct operation and consistency with the design (labels, lamacoids, settings, etc.).

.2 Stage 2 – PLC/HMI/RTU Configuration and Programming (By the Owner)

.1 **"PLC/HMI/RTU Configuration and Programming"** refers to the stage of testing where the Owner provides PLC, HMI, and RTU configuration and programming.

.3 Stage 3 – Commissioning (By the Contractor)

.1 **"Commissioning"** refers to the stage of testing where the Contractor demonstrates complete system functionality.

.4 Stage 4 – Performance Testing (By the Contractor)

.1 **"Performance Testing"** refers to the stage of testing post Commissioning, where the Contractor be available to attend onsite demonstrations of the complete, trouble-free system for a period of two (2) weeks.

.5 Stage 5 – Verification (By the Owner)

.1 **"Verification"** refers to the stage of testing where the Owner will perform Quality Control verifications.

.2 Reference Standards:

.1 All inspections and tests shall be in accordance with, but not limited to, the following applicable codes and standards except as provided otherwise in this Section.

.1 International Electrical Testing Association - NETA

.2 National Electrical Manufacturer's Association – NEMA

.3 Canadian Electrical Manufacturers Association - CEMA

.4 American Society for Testing and Materials - ASTM

.5 Institute of Electrical and Electronic Engineers – IEEE

.1 1584-2015, Guide for Performing Arc-Flash Hazard Calculations

.6 American National Standards Institute – ANSI

.1 ANSI Z535.4-2011, Product Safety Signs and Labels

.7 Canadian Electrical Code - Parts 1 and 2

.8 Canadian Standards Association – CSA

.1 CSA Z462-18, Workplace electrical safety, provides assistance in determining the severity of potential exposure, planning safe work practices, and selecting personal protective equipment to protect against shock and arc flash hazards.

.9 Insulated Power Cable Engineers Association - IPCEA

.10 National Fire Protection Association - NFPA

.11 ANSI/NFPA 70B: Electrical Equipment Maintenance

.12 WCB Regulations

.13 CANICSA-B72-M87: Lightning Protection Code

.14 Municipal By-Laws

.2 All inspections and tests shall utilize the following references:

.1 Project design drawings and specifications

.2 Shop drawings and submittals

.3 Manufacturer's instruction manuals applicable to each particular apparatus

.4 Applicable NETA acceptance testing work scope sections per NETA ATS (Latest Edition)

1.4 QUALIFICATIONS

.1 The Contractor shall retain the services of an individual that is qualified to test electrical equipment and is approved by the Consultant.

1.5 COORDINATION

.1 The Contractor shall contract the associated sub-contractors and suppliers to provide on-site testing and commissioning support services for the different components of the pump station including, but not limited to, the following:

- .1 Generator Supplier
- .2 Pump Supplier
- .3 Electrical Kiosk Supplier

.2 The Contractor, their associated sub-contractors, and suppliers shall be available during the Commissioning activities. This includes, but is not limited to:

- .1 Entire Duration:
  - .1 Instrumentation Technician
  - .2 Electrician/Wireman
- .2 As Required:
  - .1 VFD Specialist
  - .2 Other Device Specialists

.3 The Contractor shall provide configuration, functional testing, and system operation testing and verification of all individual components.

.4 Coordinate the factory field-testing and assistance per the requirements of this Section.

1.6 SUBMITTALS

.1 Submit the qualifications of the individual(s) doing testing and commissioning according to this Section for approval.

.2 Submit the coordinated test schedule for approval.

.3 Submit detailed test procedures corresponding to the requirements in this Section for approval. The test procedures shall be detailed test instructions, written with sufficient step-by-step information to allow a test to be repeated under identical conditions. List all setpoint values and acceptable results for each condition tested.

.4 Submit a preliminary copy of the hand-written field test results to the Consultant and the Owner within one (1) week after the test is completed.

.5 Prior to energization of equipment, submit a letter certifying that the electrical installation being energized complies with contract documents, applicable codes, and proper system operation.

.6 The test reports shall be compiled and submitted in formal form with a summary.

1.7 OPERATIONS AND MAINTENANCE (O&M) MANUALS

.1 Operations and Maintenance Manuals shall be in accordance with 26 05 00 Common Work Results – Electrical.

1.8 SCHEDULING

.1 Perform all testing after installation and before energizing. All systems shall pass tests prior to being put into service.

.2 The Contractor, in coordination with the equipment manufacturer's representatives, shall confirm the test schedule with the Consultant prior to the test. The Contractor shall coordinate the test schedule so that the Consultant can witness the testing, if required.

.3 Testing and calibration of electrical equipment shall be completed prior to the start of commissioning activities. When required during commissioning, the Contractor shall retest and re-calibrate equipment to support the commissioning activities.

1.9 MEETINGS

.1 Pre-Commissioning conference: The *Contractor* shall request a pre-commissioning conference with the Consultant (conference calls accepted).

1.10 SAFETY AND PRECAUTIONS

.1 Safety practices shall include, but are not limited to, the following requirements:

.1 Workers' Compensation Board Regulations

.2 Municipal By-Laws

.3 Canadian Electrical Code

.4 Electrical Safety Act of BC

.5 Municipal, Provincial and Canadian Building Code

.2 Tests shall be performed with apparatus de-energized unless otherwise specified (e.g., rotation, phasing).

.3 Power circuits shall have conductors shorted to ground by an approved hotline grounded device.

.4 In all cases, work shall not proceed until the Contractor's safety representative has determined that it is safe to do so.

.5 The Contractor shall have sufficient protective barriers and warning signs available, where necessary, to conduct specified tests safely.

.6 The Project safety procedures shall be reviewed and accepted by the Contractor and all sub-trades.

1.11 TEST EQUIPMENT

.1 All test equipment shall be furnished by the Contractor.

.2 Test instrument calibration

.1 The Contractor shall have a calibration program which maintains all applicable test instrumentation within rated accuracy.

.2 The accuracy shall be traceable to the National Bureau of Standards in an unbroken chain.

.3 Up-to-date calibration labels shall be visible on all test equipment.

.3 Use of torque wrenches

.1 Use calibrated torque wrenches for all bolted connections on buses and power cable terminations. Mark the head of the bolt with a coloured marking pen after its being torqued to manufacturer's recommended value.

Part 2 Products

2.0 NOT USED

Part 3 Execution

3.0 REQUIREMENTS

.1 Perform acceptance tests in accordance with manufacturer's recommendations, WCB regulations, and testing specifications NETA ATS (Latest Edition).

.2 Voltage adjustments shall be in accordance with CSA CAN3-C235.83, Preferred Voltage Levels for AC Systems, to 50,000 V.

.3 The test plan, procedures, test results, and reports shall be reviewed, under the supervision of and approved by the Consultant.

.4 Division of responsibility

.1 During Functional Testing the Contractor shall be responsible for the following elements of testing.

.1 End to end testing for all communications and power cabling installed as part of the contract between end devices, any intermediate splice/ terminal junction boxes, and the distributions panels, control panels, and RTU panels.

.2 Individual distribution component testing including the following:

.1 Generator and associated equipment,

.2 Transformers,

.3 Electrical panels,

.4 Automatic transfer switch,

.5 Motor circuit breakers,

.6 Ventilation control panel, and,

.7 All other electrical components as indicated on the Contract Drawings.

.3 Individual control panel component testing within the factory and in the field following installation including the following:

.1 Push buttons,

.2 Pilot lights,

.3 Control relays,

.4 Control timers,

.5 Control circuit breakers and fuses,

.6 HMI screens,

.7 Hour meters,

.8 E-stop buttons,

.9 Signal amplifiers,

.10 Signal math modules,

.11 PLC controller (test power up),

.12 Pump protection modules,

.13 Pressure Transducers,

.14 Flow meter transmitters; and,

.15 All other components contained within the control panel.

.4 Individual field component testing once installed and powered including the following:

.1 Verification of labelling and identification of field components,

.2 Flow meters,

.3 Pressure Transducers,

.4 Float switches,

.5 Door contacts,

.6 Temperature sensors,

.7 Variable frequency drives,

.8 Pump starters,

.9 Security panel,

.10 and all other instrumentation and control components shown on the Contract Drawings.

.5 The Contractor shall confirm that all devices are powered, and signals are being transmitted between the field devices and the control panel prior to control system integration and testing.

.6 Contractor to configure and setup all Instrumentation (Hydrostatic Pressure Transducer / Flow meter).

.7 The Contractor shall coordinate tests to ensure proper functionality of the system.

.2 The PLC/HMI/RTU Configuration and Programming stage(s) shall take place both before and concurrently with Functional Testing. The Contractor shall coordinate with the Owner's programmer to allow adequate access to the site. During this stage, the Owner's Programmer will be available to assist with the Contractor's Functional Tests.

.3 After the Functional Testing and Programming stages are complete, the Contractor shall perform Commissioning activities. This includes the following elements of testing.

.1 Demonstrating complete system functionality by running the system through the Process Narrative.

.2 Confirming system functionality through all programming and instrumentation setpoints with the assistance of the Owner's Programmer.

.4 Once the Contractor has sufficiently demonstrated system functionality to the Owner's Programmer Performance Testing shall commence. This includes the following elements of testing.

.1 The Contractor shall remain on site to monitor the system for a period of two (2) weeks.

.2 The system must perform trouble-free from the entire two-week period to meet the performance goal and be considered substantially complete.

.3 If there are any deficiencies, operational issues, or system failures during the two (2) week period, at the Owner's discretion the Performance Test period may be restarted after the issue/deficiency has been addressed.

.5 Verification is the stage of testing where the Owner completes their Quality Control processes to ensure the station has been designed and operates as intended.

.1 The Contractor shall assist the Owner with all related verification tasks and provide an instrumentation technician and electrician for the entire verification process. The Contractor shall also make available the VFD specialist on an as required basis.

3.1 GENERAL TESTING REQUIREMENTS

.1 Contractor shall coordinate and pay for all testing required by the Contract Documents including any additional testing required by authorities having jurisdiction.

.2 All deficient equipment/devices shall be replaced and retested.

.3 Testing for each system shall be performed after the system installation is complete and prior to the system being put into continuous operation.

.4 Advise the Contract Administrator a minimum of five (5) Business Days in advance of each test and carry out tests in the presence of the Contract Administrator.

.5 Provide instruments, meters, equipment, and personnel required to conduct tests during and at conclusion of Work.

.6 Submit detailed typewritten test reports to the Contract Administrator within five (5) Business Days after the completion of each test. Include all test reports in the Project Binder.

.1 Test reports shall clearly indicate each component that has been individually tested, test results, and whether the results are within acceptable limits.

.2 Each test report shall be accompanied by a cover sheet outlining the test and summarizing any items that have failed the tests.

.3 Cover sheet shall include names, signatures, and contact information of the individuals who conducted the tests.

.7 Protective Device Setting and Testing

.1 All work shall conform to NETA standards.

.2 Ensure circuit protective devices including overcurrent trips, relays, and fuses are installed to required values per protection and coordination study.

.8 The following is a list of general requirements for testing of equipment and cabling to be completed by the Contractor prior to detailed system testing:

.1 The Contractor shall torque down all accessible bolts, perform routine insulation resistance and continuity tests on branch and feeder circuits, and perform rotational tests for all distribution and utilization equipment, prior to, and in addition to tests performed by the Contractor specified in this Section.

.2 The Contractor shall supply a suitable and stable source of test power at each test site.

.3 The Contractor shall clean all the electrical equipment prior to testing.

.4 The Contractor shall be responsible for implementing all final settings and adjustments on protective devices and electrical equipment in accordance with the equipment calibration requirements or Power System Protective Device Studies.

.9 Any questions or concerns identified shall be promptly addressed to the Consultant.

.10 Any system, material, or workmanship which is found defective on the basis of electrical inspections and tests shall be reported directly to the Consultant.

.11 If a test reveals a fault or problem, the materials of equipment under test will be repaired or replaced and the entire test will be repeated. Tests will not be accepted until the problem is corrected. Submit additional written test reports.

.12 Maintain a written record of all tests and, upon completion of the project, assemble and certify a final test report. The field test reports shall be compiled and signed by the individual performing the testing.

.13 Power systems protective device calibration

.1 Adjustments, settings, and modifications

.1 The Contractor shall calibrate necessary field settings, adjustments, and minor modifications to conform to the coordination study without additional cost (examples of minor modifications are trip sizes within the same frame, the time curve characteristics of induction relays, ranges, etc.).

.2 Adjust or replace protective devices to the values provided in the coordination study.

.3 The trip characteristics, when adjusted to setting parameters, shall fall within the manufacturer's published time-current characteristic tolerance.

.2 The Contractor shall verify that the protective devices have been adjusted and set in accordance with the approved Power System Study.

.14 Acceptance criteria

.1 Each function and test shall be performed under conditions which simulate actual operating conditions as closely as possible.

.1 To that end, the Contractor shall provide all necessary materials, equipment, and temporary system voltages and currents to simulate fault conditions on the system being tested in order to prove and verify proper operation (fuses excepted).

.2 The Contractor shall perform general inspections at the job site and shall also review the following:

.1 Assembly of the accessory equipment, and the interconnecting wiring for control circuits.

.2 General inspection of the following: appearance, finish, alignment of doors, covers, and similar parts; quality of workmanship; possible shipping and other damage; missing, broken or incorrectly applied devices; loose or missing accessories, bushings, or hardware; loose or broken wires; proper installation of all equipment; verification that shop drawings and instructions have been shipped with all equipment and are available.

.3 Support of electrical equipment: inspect and check all electrical equipment for support and seismic bracing.

.4 Spare equipment: The Contractor shall inspect and verify spare equipment inventory as specified by Division 26.

.3 The Contractor shall provide technical verification of systems installed including the following:

.1 Technical verification: Purpose to ensure that all systems and devices are properly installed and free of defects and damage. Technical verification includes:

.1 Measurements of tension and power.

.2 Connecting joints and equipment fastening.

.3 Measurements of signals (dB, lux, baud rate, etc).

.4 Compliance with manufacturer's specification, product literature and installation instructions.

3.2 SYSTEM OPERATIONAL TESTING REQUIREMENTS AND PROCEDURES

.1 Infra-Red Scanning

.1 Perform infrared scan of all distribution equipment under loaded conditions (new and existing).

.2 Distribution System Testing:

.1 The following equipment and systems shall be inspected and tested by the Contractor per manufacturer's instructions and additional requirements noted.

.2 The following tests require that the Contractor provide materials, tools, and labour (qualified personnel) to prepare equipment and devices for testing and to perform tests and to make adjustments and recalibrations for re-testing as necessary and to reconnect systems after the testing is completed. Include in the Tender, all costs associated with the provision of labour to remove and re-install panel plates, to disconnect/reconnect cables, and perform any labour other than testing, and to provide any materials and tools.

.1 Transformers

.1 Oil and Dry type rated equal to and greater than 600 V.

.2 Tests

.3 Inspect for physical damage, proper installation, anchorage, and grounding.

.4 Verify transformer is supplied and connected in accordance with the Contract documents.

.5 Insulation-resistance (Megger test) test all windings, high to low and ground, low to high and ground.

.6 Verify phase rotation sequence of transformer secondary windings.

.7 Adjust the transformer taps to the nominal system voltages per CSA CAN3-C235.83.

.8 Inspect and check for operation of all other overcurrent protection devices (switch/fuses, circuit breakers). Verify fuse/circuit breaker sizes in accordance with the Drawings.

.9 Insulation resistance (Megger) test of all incoming bus ducts and feeders and extensions to all relocated outgoing feeders and all new outgoing feeders. Ensure that all electronic and other voltage sensitive equipment is disconnected before the tests are applied and reconnect same at completion of test.

.10 After each switchboard has been energized, manually operate each and every circuit breaker or switch and prove that when operated, the device in fact opens all underground conductors at the load end of the feeder and that the device and load have been labeled correctly.

.2 Cables

.1 Apply grounds for a time period adequate to drain all insulation-stored charge.

.2 Insulation Resistance test per NETA ATS 2017 standards.

.3 Other utilization equipment

.4 Switches

.1 Verify correct wire bending radii at terminations per wire manufacturer's recommendations and CEC.

.5 Protective relays and devices

.1 Conduct tests according to the manufacturer's recommended testing procedures.

.2 Calibrate and set all settings according to the Protective Device Coordination Study.

.3 The following equipment shall be inspected and tested by the Contractor. Coordinate activities with the manufacturer's authorized service representatives.

.1 The Contractor shall coordinate with the suppliers and Subcontractors to perform the following tests:

.1 Test secondary voltage levels of all transformers and adjust taps to within 2% of the rated operating voltage of the connected equipment unless directed otherwise by the Consultant. Test reports shall include phase and neutral currents.

.2 Control and switching - all circuits shall be tested for the correct operation of devices, switches, and controls, including sequenced operation of systems where applicable.

.3 Include in the written reports to the Consultant, the time and date on which each load was measured and the voltage at time of test.

.2 General power system tests

.1 Insulation Resistance test all 120 V and higher circuits, feeders, and equipment.

.2 Check resistance to ground before energizing any equipment.

.3 Phase balance - when load conditions are commensurate with actual operating conditions, measure the load and the voltage on each phase at each switchboard, splitter, motor control centre, motor distribution centre, distribution panelboard, and lighting and power panelboard and report the results, including neutral currents, in writing to the Consultant. Rearrange circuit connections as necessary to balance the load on each phase to within 15% of average load. Measure phase voltages at connected loads under fully load conditions and adjust transformer taps to within 2% of rated voltage of equipment. Provide upon completion of the work specified herein, load balance report, phase and neutral currents on panelboards, dry-core transformers and motor control centres, operating under normal load, as well as hour and date on which each load was measured, and voltage at time of test.

.4 Motor loading - measure the line current of each phase of each motor with the motor operating under load and report the results along with the motor nameplate current in writing to the Consultant. Upon indication of any unbalance or overload, thoroughly examine the electrical connections and rectify any defective parts or wiring. If electrical connections are correct, overloads due to defects in the driven machines shall be reported in writing to the Consultant.

.5 Phase relationship tests: Check connections to all new and existing equipment, outlets and devices for proper phase relationship. During such check, disconnect all devices which could be damaged by the application of voltage or reversed phase sequence.

.3 Low voltage feeder and branch circuit conductors (600 V and below)

.1 Test for continuity of each lighting and heating circuit originating from branch distribution panels.

.2 Test for grounds in each circuit; test shall consist of the physical examination of the installation to ensure that all required ground jumpers, devices, and appurtenances do exist and are mechanically firm.

.3 Perform a 500V M-Ohm meter test on each circuit between the conductor and ground. The insulation resistance shall not be less than 2 megohms for circuits under 120V, 6 M-Ohms between conductor and ground on those circuits (120 - 600 V) with total single conductor length of 2,500 feet and over, nor less than 8 M-Ohms for those circuits (120 - 600 V) with single conductor length of less than 2500 feet. If conductor fails test, replace wiring or correct defect and retest.

.4 Perform torque test for every conductor tested and terminated in an overcurrent device or bolted type connection; torque all connections per manufacturer's recommendations.

.5 Megger circuits, feeders and equipment up to 350 V with a 500 V instrument.

.6 Megger 350-600 V circuits, feeders and equipment with a 1000 V instrument.

.7 Check resistance to ground before energizing.

.4 Panelboards

.1 Inspect for physical damage, proper installation, supports, and grounding.

.2 Verify that neutrals are grounded only at the main service.

.3 Load balance tests: Check all panelboards for proper load balance between phase conductors and make adjustments as necessary to bring unbalanced phases to within 15% of average load.

.4 Electronic and adjustable Breakers: provide adjustments as required to align with connected equipment.

.5 Breakers and Load Break Switches

.1 Adjust and set in accordance with power system study.

.2 Clean and lubricate.

.3 Visual inspection.

.4 Manual function test.

.5 Torque test.

.6 Contact resistant test (100 amp resistance tester).

.7 Electrical function test.

.8 Function trip test of all protective relay device.

.6 Breakers: Molded Case Breakers 150 Amp Frame and Larger:

.1 Visually inspect.

.2 Ductor test.

.3 Megger test.

.4 Mechanical function test.

.5 Set all units with adjustable magnetic trip units.

.6 Where solid state protection is provided with large breakers, test units as follows:

.7 Inspect and test in accordance with manufacturer's most recent installation and maintenance brochure.

.8 Perform tests using manufacturer's relay test unit as applicable, with corresponding test instruction.

.9 If manufacturer's tester is not available, use an approved relay tester unit with proper test data and test accessories.

.10 Proof test each relay in its control circuit by simulated trip tests to ensure total and proper operation of breaker and relay trip circuit by injection of relay circuit to test trip operation.

.11 Check C/T and P/T ratios and compare to coordination data.

.7 Fused or Unfused Disconnect Switches:

.1 Visually inspect and clean.

.2 Ductor test across switch blade contact surfaces.

.3 Megger test.

.4 Mechanical function test.

.8 Transformers

.1 Visual inspection of enclosure and all accessories.

.2 Torque test all bus connections and cable terminations and seal with red lacquer.

.3 Megger test.

.4 Dielectric power factor test.

.5 Core ground test.

.6 Ratio test in all tap positions.

.7 Test operation of temperature and operation of all associated alarm contacts.

.8 Test and calibrate ground fault relays and function test to trip associated breakers.

.9 Make voltage and power factor checks throughout electrical kiosk. If directed by the Contract Administrator, adjust transformer tap settings. Readings taken at this time to be logged, tabulated and any adjustments made to be suitably logged and incorporated in the Project Binders.

.9 Transfer Switch - Low Voltage

.1 Torque test all bus joints and cable terminations and seal with red lacquer.

.2 Ductor test.

.3 Megger test.

.4 Power up control circuits, simulate loss of normal power and function all devices including timers.

.5 Apply device settings as specified.

.6 Wiring Checks as listed:

.7 Check all control, relaying and instrumentation wiring against vendor wiring schematics, three line diagrams and Technical Specifications.

.8 Test each circuit for continuity using a buzzer or similar device.

.9 All current circuits shall be injected, all voltage circuits shall be powered at 120 Volts, all devices functioned and checked against control schematic diagram.

.10 Check polarity and verify phase relationships on all three phase metering circuits.

.11 Where errors are discovered and changes are required, mark up and note required corrective action on vendor prints.

.12 Operation tests in accordance with Section 26 32 13 01 – Power Generation – Diesel.

.10 Microprocessor Type Relays

.1 Mechanical Inspection:

.2 Remove cover from relay case carefully. Trip circuit is live circuit and on some relays it is possible to cause an instantaneous trip while removing relay cover. Inspect cover gasket. Check glass for tightness and cracks.

.3 Eliminate unwanted tripping, short circuit current transformer secondary by careful removal of relay test plug or operation of appropriate current blocks.

.4 Check connections, circuit boards and modules for tightness.

.5 Check output relay coils for signs of overheating and brittle insulation.

.6 Cleaning:

.7 Clean glass inside and out.

.8 Clean relay compartment as required. Clean relay plug in contacts if applicable, using proper tools.

.9 Remove dust and foreign materials from interior of relay using small brush or low pressure 3.2 kg blower of nitrogen.

.10 Inspect for any signs of moisture and corrosion.

.11 Clean relay output contacts with burnishing tool or non residue contact cleaner.

.12 Electrical Testing: Function tests for typical overcurrent relays include:

.13 Energize relay from an appropriate DC power source and check "ON" indication.

.14 Time current function test and trip flag operation.

.15 Instantaneous pickup functional trip and flag operation.

.16 Use tests listed above for most microprocessor overcurrent type relays.

.17 Check C/T and P/T ratios and compare to coordination data.

.11 Solid State Relays

.1 Inspect and test in accordance with manufacturer's most recent installation and maintenance brochure.

.2 Perform tests using manufacturer's relay test unit as applicable, with corresponding test instructions.

.3 If manufacturer's tester is not available, use an approved relay tester unit with proper test data and test accessories.

.4 Proof test each relay in its control circuit by simulated trip tests to ensure total and proper operation of breaker and relay trip circuit by injection of relay circuit to test the trip operation.

.5 Check C/T and P/T ratios and compare to coordination data.

.12 Motor Control Centre/Panels

.1 Megger Test all motor feeders

.2 Check polarity and verify phase relationships on main feeder and all equipment feeders. Bump Test all existing motors fed from the new MCC.

.3 Power up control circuits. Verify operation of all control circuits re-terminated at new MCC.

.4 Test operation of each piece of equipment in ‘Hand’

.5 Test operation of each piece of equipment in ‘Auto’

.13 Bus Duct - Low Voltage

.1 Visually inspect.

.2 Torque test all bolted connections and seal with red lacquer.

.3 Megger test.

.4 Contact resistance test on total bus duct.

.14 Devices

.1 Test all receptacles for proper polarity, circuitry and grounding.

.15 Grounding systems

.1 Verify that generator neutral is solidly bonded to the electrical kiosk ground by removing the service neutral grounding conductor and insulation resistance test the neutral bus.

.2 Perform point-to-point tests to determine the resistance between the main grounding system and all major electrical equipment frames, system-neutral, and/or derived neutral points installed as part of this Contract. Investigate resistance values, which exceed 0.5 ohm. If this resistance cannot be obtained with the ground system, notify the Consultant for further instruction.

.3 The resistance to ground between the equipment enclosures and the grounding grid shall be tested. In soils of low conductivity, additional ground rods, ground plates, and ground wires shall be added, as required. Ground measurements shall not exceed 25 ohms. Measurements shall be undertaken under dry soil conditions, and when frost penetration has not exceeded 150mm. Test results shall be documented by the Contractor and copies given to the Contract Administrator.

.4 Test Method: 3-Point (Fall-of-Potential) Method per IEEE Standard 81.

3.3 HVAC AND LIGHTING SYSTEMS

.1 The following applies to heating, ventilation, and lighting systems:

.1 Heating and Ventilation Systems

.1 Purpose to ensure that existing systems are functional. Verification includes:

.1 Confirmation of thermostat settings for heating and cooling.

.2 Confirmation of operation of heaters and fans.

.3 Confirmation of all control panel elements for ventilation control panels are operational and functioning.

.2 Lighting Systems

.1 Purpose to ensure that systems are functional. Verification includes:

.1 Confirmation that lighting within on site and in electrical kiosk is activated by the associated switches.

.2 Confirmation that emergency lighting is operational in the event of power failure.

.3 Confirmation that kiosk and enclosure lighting is operating as intended per Contract Drawings.

3.4 GENERATOR SYSTEMS

.1 In accordance with Section 26 32 13 01 – Power Generation – Diesel.

3.5 CONTROL SYSTEMS

.1 The following applies to control systems and instrumentation:

.1 Loop testing: Purpose is to test all control wiring loops between instrumentation and terminations within the control panel to ensure signal continuity and correct signal polarity. Loop testing to be completed for the following instruments:

.1 Flow meters

.2 Float switches

.3 Door contacts

.4 VFD signals

.5 Current transducers

.6 And any other devices included within the Contract Documents.

.2 Operational verification: Purpose to ensure that devices and systems' performance meet or exceed established functional requirements. Operational verification includes:

.1 Operation of pump starters (VFDs, HOA operation, etc.).

.2 Operation of control system (PLCs, HMIs, relay components, etc.).

.3 Field Quality Control of generator sets per Section 26 32 13 01 Power Generation – Diesel.

.4 Operation of each device individually and within its environment.

.5 Operation of buttons, switches, and pilot lights.

.6 Operation of the external devices, including:

.1 Float switch

.2 Level sensors

.3 Flow meters

.4 Generator systems

.7 Provide assistance during Owner testing and commissioning activities.

.2 Labels

.1 Upon completion of the inspection, calibration, and testing, attach a label to all devices tested. These labels shall indicate the date tested, the Contractor company name, and tester's initials.

.3 Re-testing

.1 Any fault in material or in any part of the installation revealed by these tests shall be investigated, replaced, or repaired by the Contractor and the same test repeated by the Contractor at Contractor’s expense until no fault appears.

3.6 MANUFACTURER'S FIELD SERVICES:

.1 Obtain written report from manufacturer verifying compliance of Work, in handling, installing, applying, protecting and cleaning of product and submit manufacturer's field reports to Contract Administrator for review. Include field reports in Project Binders.

.2 Provide manufacturer's field services consisting of product use recommendations and periodic site visits for inspection of product installation in accordance with manufacturer's instructions.

.3 Obtain manufacturer’s field services for commissioning of equipment as required in other Sections of Division 26 Technical Specifications.

.4 Conduct additional testing as required in other Sections in Division 26 Technical Specifications.

3.7 STANDARDS

.1 The following tests shall be conducted in accordance with latest CSA, ASTM, IEEE and IPCEA standards, recommendations for power cable and equipment testing and standards of the authority having jurisdiction. Notwithstanding the test levels listed in these standards, in no case shall the maximum DC test level exceed manufacturer's factory test AC level for that equipment.

.2 Where production tests are required by EEMAC or CSA for manufactured equipment, provide records of these tests. All tests shall be completed in accordance with manufacturer's published instructions. If these instructions do not conform to the test requirements as specified herein inform the Contract Administrator prior to proceeding with the test.

3.8 TEST APPARATUS AND INSPECTION REPORT

.1 The Contractor is responsible for furnishing all apparatus and labour required for the test operations.

.2 Inspection and test results to be recorded on a suitable form which shall be furnished by the Contractor. The inspection and report forms shall be submitted to the Contract Administrator. Each form to be signed by the test technician. Space to be provided for noting approved items and their disposition.

.3 The Contractor will submit full commissioning reports and information for as-built drawings and acceptance documents signed by test technician.

.4 Upon completion of the Work, the Contractor will assemble complete sets of inspection/test results/reports to be placed in the operating and maintenance manuals. Reports shall include the following:

.1 Summary of project

.2 Description of equipment tested

.3 Description of test

.4 Test results including re-testing results

.5 Test dates

.6 Tester’s name

.7 Witnesses (when required)

.8 Corrective work

.9 Acceptance criteria

.10 Conclusions and recommendations

.11 Appendix, including appropriate test forms

3.9 DEMONSTRATION

.1 Demonstrate and instruct the Owner's personnel on operating and maintenance procedures for all electrical systems using the assistance of specialist sub-trades and manufacturer's representatives for instruction. Systems to be demonstrated and trained on shall include the following:

.1 Entire power distribution systems (primary and backup).

.2 Operation of circuit breakers, interlocking schemes, etc.

.3 Motor control equipment and associated components.

.4 Instrumentation and field monitoring/control devices.

.5 Manual and automatic station control operation.

.6 Continuity between switches/pilot lights/field devices and the PLC.

.7 Loss of power controls and backup power operation.

.8 Alarming.

.9 Routing and installation of major feeders, grounding and raceways.

.10 Labeling and identification schemes.

.11 Use of the operations and maintenance manuals.

3.10 TRAINING

.1 Arrange an acceptable time with the Owner and the Contract Administrator and submit a program of instruction and demonstration for the Owner's approval. Assume that the Owner's staff are not familiar with any of the special equipment and/or systems installed.

.2 As a condition of Substantial Completion, submit to the Contract Administrator complete list of systems demonstrated and training completed, and state for each system:

.1 Date that instructions were given to the Owner’s staff.

.2 Duration of instruction.

.3 Names of persons instructed.

.4 Other parties present (manufacturer’s representative, Contract Administrator, etc.).

.5 Signature of the Owner’s staff stating that they properly understood the system installation, operation, and maintenance requirements and identifying any systems or equipment which were not demonstrated to their satisfaction and which must be re-demonstrated

3.11 SYSTEM ACCEPTANCES

.1 Prior to requesting inspection, submit, for review by the Contract Administrator letters from the manufacturers of equipment and systems indicating their technical service representatives have inspected and tested the equipment and systems and are satisfied with the methods of installation, connections and operation.

.2 Such acceptance letters shall be submitted for the following:

.1 Switchboards.
.2 Distribution and Power Panels.
.3 Transformers.
.4 Motor Control Centres/Panels.
.5 Generator
.6 Automatic Transfer Switch

END OF SECTION

TABLE OF CONTENTS

Part 1 General 2
1.0 Documents 2
1.1 Scope 2
1.2 Related Technical Specifications 2
1.3 Regulatory Requirements 2
1.4 Shop Drawings and Submittals 2
1.5 Delivery, Storage and Handling 2
Part 2 Products 2
2.0 Materials 3
Part 3 Execution 3
3.1 Examination 3
3.2 Installation 3

Revision History

Rev. No.	Date	Description of Revisions	Prep. By	Rev. By
-	May 29, 2026	Issued for Tender	JB	MS

Part 1 General

1.0 DOCUMENTS

.1 This Technical Specification forms a part of the Contract Documents and is to be read, coordinated and implemented in conjunction with all other parts.

1.1 SCOPE

.1 Materials and installation for wire and box connectors.

1.2 RELATED TECHNICAL SPECIFICATIONS

.1 Technical Specification 26 05 00 Common Work Results – Electrical

.2 Technical Specification 26 05 21 Wires and Cables (0-1000V)

1.3 REGULATORY REQUIREMENTS

.1 Canadian Standards Association (CSA International)

- .1 CAN/CSA C22.2 No. 18.1 13, Metallic Outlet Boxes
- .2 CAN/CSA C22.2 No. 18.2 06, Nonmetallic Outlet Boxes
- .3 CAN/CSA C22.2 No. 18.3 12, Conduit, Tubing, and Cable Fittings
- .4 CAN/CSA C22.2 No. 18.4-04, Hardware for the Support of Conduit, Tubing
- .5 CAN/CSA C22.2 No. 65-18, Wire Connectors.

.2 Electrical and Electronic Manufacturers' Association of Canada (EEMAC)

- .1 EEMAC 1Y 2, 1961 Bushing Stud Connectors and Aluminum Adapters (1200 Ampere Maximum Rating).

.3 National Electrical Manufacturers Association (NEMA)

1.4 SHOP DRAWINGS AND SUBMITTALS

.1 Submit in accordance with Technical Specification 26 05 00 Common Work Results – Electrical.

1.5 DELIVERY, STORAGE AND HANDLING

.1 Deliver, store and handle materials in accordance with Technical Specification 26 05 00 Common Work Results – Electrical.

Part 2 Products

2.0 MATERIALS

.1 Pressure type wire connectors to: CSA C22.2 No. 65, with current carrying parts of copper sized to fit copper conductors as required.

.2 Fixture type splicing connectors to: CSA C22.2 No. 65, with current carrying parts of copper sized to fit copper conductors 10 AWG or less.

.3 Bushing stud connectors: to EEMAC 1Y 2 to consist of:

.1 Connector body and stud clamp for copper conductors.

.2 Clamp for stranded copper conductors.

.3 Stud clamp bolts.

.4 Bolts for copper conductors.

.5 Sized for conductors as indicated.

.4 Clamps or connectors for armoured cable and flexible conduit as required to comply with CAN/CSA C22.2 No. 18 (all subsections).

Part 3 Execution

3.1 EXAMINATION

.1 Verification of Conditions: verify that conditions of substrate previously installed under other Sections or Contracts are acceptable for wire and box connectors installation in accordance with manufacturer's written instructions.

.1 Visually inspect substrate in presence of Consultant or provide photographic evidence of areas of concern.

.2 Inform Consultant of unacceptable conditions immediately upon discovery.

.2 Proceed with installation only after unacceptable conditions have been remedied.

3.2 INSTALLATION

.1 Remove insulation carefully from ends of conductors and:

.1 Apply coat of zinc joint compound on aluminum conductors prior to installation of connectors.

.2 Install mechanical pressure type connectors and tighten screws with appropriate compression tool recommended by manufacturer.

Installation shall meet secureness tests in accordance with CSA C22.2 No. 65.

.3 Install fixture type connectors and tighten. Replace insulating cap.

.4 Install bushing stud connectors in accordance with EEMAC 1Y 2.

END SECTION

TABLE OF CONTENTS

Part 1 General 2
1.0 Documents 2
1.1 Scope 2
1.2 Related Technical Specifications 2
1.3 Regulatory Requirements 2
1.4 Shop Drawings and Submittals 2
1.5 Delivery, Storage and Handling 3
Part 2 Products 3
2.0 Building Wires 3
2.1 Teck 90 Cable 3
2.2 Control and Instrumentation Cable 3
2.3 Ethernet cables 4
2.4 Ethernet patch cables 5
2.5 Armoured Control and Instrumentation Cable 5
2.6 Twisted Pair Shielded (TPSH) Armoured Cables 6
2.7 Triad Shielded Armoured Cables 6
2.8 Fibre Optic Cables 7
Part 3 Execution 7
3.1 Field Quality Control 7
3.2 General Cable Installation 7
3.3 Wiring Identification 8
3.4 Analog Signals 9
3.5 Digital Signals 9
3.6 Installation of Building Wires 10
3.7 Installation of Teck90 Cable (0-1000V) 10
3.8 Installation of Armoured Cable 10
3.9 Installation of Control and Instrumentation Cable 10
3.10 Installation of Armoured Control and Instrumentation Cable 10

Revision History

Rev. No.	Date	Description of Revisions	Prep. By	Rev. By
-	May 29, 2026	Issued for Tender	JB	MS

Part 1 General

1.0 DOCUMENTS

.1 This Technical Specification forms a part of the Contract Documents and is to be read, coordinated, and implemented in conjunction with all other parts.

1.1 SCOPE

.1 Materials and installation for wire and cables.

1.2 RELATED TECHNICAL SPECIFICATIONS

.1 Technical Specification 26 05 00 Common Work Results – Electrical

.2 Technical Specification 26 05 20 Wire and Box Connectors (0-1000V)

.3 Technical Specification 26 05 43 01 Installation of Cables in Trenches and Ducts

.4 Technical Specification 26 27 16 Electrical Cabinets and Enclosures

1.3 REGULATORY REQUIREMENTS

.1 Canadian Standards Association (CSA International)

.1 CAN/CSA C22.2 No. 0.3-09 (R2019), Test Methods for Electrical Wires and Cables

.2 CAN/CSA C22.2 No. 38-14, Thermoset-insulated wires and cables

.3 CSA C22.2 No. 49, Flexible Cords and Cables

.4 CSA C22.2 No. 51, Armoured Cables

.5 CSA C22.2 No. 52, Underground secondary and service-entrance cables

.6 CSA C22.2 No. 65, Wire Connectors

.7 CAN/CSA C22.2 No. 75, Thermoplastic insulated wires

.8 CAN/CSA C22.2 No. 127-15, Equipment and lead wires

.9 CSA C22.2 No. 131, Type TECK 90 Cable

.10 CAN/CSA C22.2 No. 131-17, Type TECK 90 Cable

.11 1.4.13 CSA C22.2 No. 174, Cables and Cable Glands for Use in Hazardous Locations

.12 CSA C22.2 No. 2556, Wire and Cable Test Methods

1.4 SHOP DRAWINGS AND SUBMITTALS

.1 Submit in accordance with Technical Specification 26 05 00 Common Work Results – Electrical.

1.5 DELIVERY, STORAGE AND HANDLING

.1 Deliver, store and handle materials in accordance with Technical Specification 26 05 00 Common Work Results – Electrical.

Part 2 Products

2.0 BUILDING WIRES

.1 Conductors: stranded for 10 AWG and larger. Minimum size: 12 AWG, unless noted otherwise.

.2 Copper conductors: size as indicated, with 600 V insulation of cross-linked thermosetting polyethylene material rated RW90 XLPE, Jacketed.

.3 Grounding conductors to be in accordance with requirements in Technical Specification 26 05 28 Grounding - Secondary.

2.1 TECK 90 CABLE

.1 Conductors:

.1 Grounding conductor: copper.

.2 Circuit conductors: copper, size as indicated.

.2 Insulation:

.1 Cross-linked thermosetting polyethylene rated type RW90 XLPE.

.2 Rating: 1000V

.3 Inner jacket: polyvinyl chloride material.

.4 Armour: interlocking aluminum.

.5 Overall covering: thermoplastic polyvinyl chloride.

.6 Connectors:

.1 Watertight approved for TECK Cable.

.2 Explosion proof in classified areas approved for TECK cable.

2.2 CONTROL AND INSTRUMENTATION CABLE

.1 Internal cabinet control wiring shall be TEW (tinned).

.1 Wire: to CAN/CSA C22.2 No. 127-15.

.2 Minimum Size (unless otherwise noted by Contract Drawings):

.1 120VAC: 14AWG.

.2 24VDC: 16AWG.

.3 Colour Code

.1 AC 3-Phase:

.1 Line 1: Red

.2 Line 2: Black

.3 Line 3: Blue

.4 Neutral: White

.5 Ground: Green

.2 AC Hot: Red

.3 AC Hot (Secondary): Black

.4 AC Neutral: White

.5 DC Positive: Blue

.6 DC Negative: Gray

.7 Generator Start: Yellow

.8 Ground: Green

.2 Analog instrumentation wiring:

.1 Cable: to CAN/CSA-C22.2 No. 75.

.2 Conductors:

.1 Circuit conductors: 7 strand tinned copper.

.3 Insulation:

.1 Cross-linked thermosetting polyethylene rated type RW90 XLPE.

.2 Rating: 300V and 600V, as required.

.4 Jacket: polyvinyl chloride material.

.5 Shield:

.1 Individual Foil

.2 Tinned copper drain wiring under and in contact with foil.

2.3 ETHERNET CABLES

.1 CAT6 (250MHz) rated, compatible with 1000BaseT networks.

.2 Outdoor rated, installation in conduit approved, UV resistance.

.3 Conductors:

.1 8 x 23 AWG solid copper conductors, arranged in 4 twisted pairs.

.2 RJ45 Termination: TIA 568A

.3 Straight-through (non-crossover) wiring, unless noted otherwise.

.4 Jacket:

.1 Oil and sunlight resistant PVC.

.2 Colour: Blue

2.4 ETHERNET PATCH CABLES

.1 CAT6 (250MHz) rated, compatible with 1000BaseT networks.

.2 8 x 23 AWG solid copper conductors, arranged in 4 twisted pairs.

.3 Straight-through (non-crossover) wiring, unless noted otherwise.

.4 RJ45 male connectors with molded boots.

.1 Termination: TIA 568A

.5 Colour: Blue

2.5 ARMOURED CONTROL AND INSTRUMENTATION CABLE

.1 Cable: to CAN/CSA-C22.2 No. 239-21.

.2 Conductors:

.1 Circuit conductors: 7 strand tinned copper.

.2 Conductor size per Contract Drawings.

.3 Insulation:

.1 Cross-linked thermosetting polyethylene rated type RW90 XLPE.

.2 Rating: 300V and 600V, as required.

.4 Inner jacket: polyvinyl chloride material.

.5 Armour: interlocking aluminum.

.6 Overall covering: thermoplastic polyvinyl chloride.

.7 Certification:

.1 FT-4 Flame Rated

.2 Temperature: 105°C dry, 75°C wet, and -40°C

.3 Suitable for installation in Class I, Zone 1 and Zone 2, and Class II, Division 1 and 2 Hazardous Locations.

.8 Connectors:

.1 Watertight approved for armoured control and instrumentation cable.

.2 Explosion proof in classified areas approved for armoured control and instrumentation cable.

2.6 TWISTED PAIR SHIELDED (TPSH) ARMOURED CABLES

.1 TPSH cables are to be constructed as follows:

.1 Compliance: CSA C22.2 - No. 38, No. 174 and No. 239

.2 Two copper conductors, stranded, tinned, minimum #16 AWG, PVC-insulated, twisted in nominal intervals of 50 mm. Conductor identification to be by black and white coloured insulation.

.3 100 percent coverage aluminum foil or tape shield and bare stranded, tinned copper drain wire, minimum #16 AWG for each pair.

.4 Separate bare stranded, tinned copper drain wire, minimum #16 AWG for each pair.

.5 Overall shield and bare stranded tinned copper drain wire for multi-pair cables.

.6 Insulated for 600 V, 90 degrees C.

.7 Interlocking aluminum armour.

.8 Overall flame-retardant PVC jacket rated to minus 40 degrees C and meeting low gas emission and FT4 flame test requirements as specified in CSA-C22.2 – No. 0.3 and IEEE 383, and sunlight (UV) resistant rated.

.9 Overall PVC jacket to be grey in colour.

.10 HL rating for hazardous location Class 1 Div. 1 or 2.

.11 Suitable for cable tray installation, indoor and outdoor, for direct burial, and for installations in conduits.

.12 Each pair of multiconductor TPSH cables to be individually shielded and continuously number coded.

2.7 TRIAD SHIELDED ARMOURED CABLES

.1 Triad shielded armoured cables constructed same as Twisted Pair Shielded cables except for:

.1 Three copper conductors per triad group.

2.8 FIBRE OPTIC CABLES

.1 Optic fibre cables to be aluminum clad armored.

.2 Trunk cable to conform with the following:

.1 ANSI X3.166.

.2 62.5/125 µm core/cladding (OM1).

.3 Dual-mode, 850/1300 nm.

.4 Graded-index glass.

.5 Gel-filled, loose-buffer construction.

.6 Bandwidth: 160/500 MHz-km at 850/1,300 nm.

.7 Attenuation: 3.5/1.5 dB/km @ 850/1,300 nm.

.8 Numerical aperture: 0.275.

.9 Strength member: Kevlar.

.10 Pulling tension: 2,000 N.

.11 Rating: Indoor/Outdoor Use, Tray Rated.

.12 Jacket: orange PVC for multimode optic fibre and yellow PVC for single mode optic fibre.

.3 Break-out cables and jumpers to be similar except tight-buffer construction. Jumper cables are to be supplied as factory assembled units.

.4 Optic fibre connectors are to be oven-cured aluminum/ceramic ST type.

Part 3 Execution

3.1 FIELD QUALITY CONTROL

.1 Perform tests in accordance with Technical Specification 26 05 00 Common Work Results – Electrical.

3.2 GENERAL CABLE INSTALLATION

.1 Install cable in trenches in accordance with Technical Specification 26 05 43 01 Installation of Cables in Trenches and in Ducts.

.2 Terminate cables in accordance with Technical Specification 26 05 20 Wire and Box Connectors - (0-1000 V).

.3 Conductor length for parallel feeders to be identical.

.4 Lace or clip groups of feeder cables at distribution centres, pull boxes, and termination points.

.5 All field wiring/communication cabling that maybe field installed directly onto any cabinet door mounted components shall be suitably routed and protected across the door hinge to prevent possible mechanical damage upon door opening and/or door closing.

3.3 WIRING IDENTIFICATION

.1 Identify wiring with permanent indelible identifying markings, either numbered or coloured plastic tapes, on both ends of cable.

.2 Maintain phase sequence and colour coding throughout.

.3 Colour code: to CSA C22.1.

.4 Use colour coded wires in communication cables, matched throughout system.

.5 Wire Labeling:

.1 Low voltage single and three phase power conductors shall be tagged with the following format: XXXX-X#, where:

.1 XXXX – Equipment tag number that is being supplied

.2 -X – L (for phase conductors) or N (for Neutral)

.3 # - Sequential Number, if necessary.

.4 Examples:

.1 VFD301-L1: VFD301 power conductor (red phase)

.2 VFD301-L2: VFD301 power conductor (black phase)

.3 VFD301-L3: VFD301 power conductor (blue phase)

.4 P1-L: Single-phase Pump 1 line conductor

.5 P1-N: Single-phase Pump 1 neutral conductor

.2 Field instrument and control wires shall be tagged with the following format: XXX###-XX##, where:

.1 XXX### – Field equipment tag number

.2 –XX## – Sequential Number or Voltage Identifier

.3 Examples:

.1 FIT110-2: Instrument field wiring to Flow Indicator Transmitter 110

.2 LSH003-1: Field control wire from Level Switch LSH003

.3 Panel wiring shall be tagged with the following format: XXX###-##XXX, where:

.1 XXX### – Upstream equipment tag

.2 –##XXX – PLC channel identifier, or Voltage Identifier and sequential number

.3 Panel wiring suffixes (xxx):

.1 24V – 24VDC Control Supply

.2 12V – 12VDC Control Supply

.3 0V – ELV return wire

.4 GND/SHD – Field instrument wire ground (or shield)

.5 AI+/AI- - Analog Signal wiring (control panel terminal to PLC/RTU)

.6 DI – Digital Input wiring (control panel terminal to PLC/RTU)

.7 DO – Digital output wiring (control panel terminal to PLC/RTU)

.4 Examples:

.1 LCP101-24V13: 24VDC supply wire in Local Control Panel 101

.2 PLC101-03AI+: Analog input signal wiring to PLC101, Channel 3

.3 RTU801-02DI: Digital (discrete) input signal wiring to RTU801, Channel 2

3.4 ANALOG SIGNALS

.1 Use twisted-pair shielded armoured (instrument TECK cable) as applicable, for low-level analog signals such as 4-20 mA, 1-5VDC, 0-10VDC, pulse type circuits 24VDC and under, and other signals of a similar nature.

.2 Use triad shielded armoured cable for connections between RTDs and transmitters or CDAC RTD inputs.

3.5 DIGITAL SIGNALS

.1 Use TPSH armoured cable for input and output signals 24 VDC and under and terminate in the marshalling panels.

.2 Use Control TECK cable or wire and conduit power to instruments, for 120 V signals other than those mentioned above and as otherwise shown in the Contract Drawings.

3.6 INSTALLATION OF BUILDING WIRES

.1 Install wiring as follows:

.1 In conduit systems in accordance with Technical Specification 26 05 43 01 Installation of Cables in Trenches and in Ducts.

3.7 INSTALLATION OF TECK90 CABLE (0-1000V)

.1 Install cabling as follows:

.1 In conduit systems in accordance with Technical Specification 26 05 43 01 Installation of Cables in Trenches and in Ducts.

.2 Install cable exposed, securely supported by straps or hangers.

.1 Group cables wherever possible on channels, individually strapped.

3.8 INSTALLATION OF ARMOURED CABLE

.1 Install cabling as follows:

.1 In conduit systems in accordance with Technical Specification 26 05 43 01 Installation of Cables in Trenches and in Ducts.

.2 Install cable exposed, securely supported by straps or hangers.

.1 Group cables wherever possible on channels.

3.9 INSTALLATION OF CONTROL AND INSTRUMENTATION CABLE

.1 Ground control cable shield at control cabinet only.

.2 Cut and heatshrink shield at terminations to field devices.

3.10 INSTALLATION OF ARMOURED CONTROL AND INSTRUMENTATION CABLE

.1 Install cabling as follows:

.1 In conduit systems in accordance with Technical Specification 26 05 43 01 Installation of Cables in Trenches and in Ducts.

.2 Install cable exposed, securely supported by straps or hangers.

.1 Group cables wherever possible on channels.

END SECTION

TABLE OF CONTENTS

Part 1 General 2
1.0 Documents 2
1.1 Scope 2
1.2 Related Technical Specifications 2
1.3 Regulatory Requirements 2
1.4 Shop Drawings and Submittals 2
1.5 Delivery, Storage and Handling 2
Part 2 Products 2
2.0 Equipment 2
Part 3 Execution 3
3.1 General Installation 3
3.2 Inspection Well 4
3.3 Electrodes 4
3.4 System and Circuit Grounding 4
3.5 Equipment Grounding 4
3.6 Junction Boxes and Vaults 4
3.7 Master Ground bus 4
3.8 Field Quality Control 5

Revision History

Rev. No.	Date	Description of Revisions	Prep. By	Rev. By
-	May 29, 2026	Issued for Tender	JB	MS

Part 1 General

1.0 DOCUMENTS

.1 This Technical Specification forms a part of the Contract Documents and is to be read, coordinated and implemented in conjunction with all other parts.

1.1 SCOPE

.1 Materials and installation for secondary grounding.

1.2 RELATED TECHNICAL SPECIFICATIONS

.1 Technical Specification 26 05 00 Common Work Results – Electrical

.2 Technical Specification 26 24 01 Service Equipment

1.3 REGULATORY REQUIREMENTS

.1 CSA C22.1 - Canadian Electrical Code, Part 1: Section 10 Grounding and Bonding

.2 American National Standards Institute (ANSI)/Institute of Electrical and Electronics Engineers (IEEE)

.1 ANSI/IEEE 837-02, Qualifying Permanent Connections Used in Substation Grounding.

1.4 SHOP DRAWINGS AND SUBMITTALS

.1 Submit in accordance with Technical Specification 26 05 00 Common Work Results – Electrical.

1.5 DELIVERY, STORAGE AND HANDLING

.1 Deliver, store and handle materials in accordance with Technical Specification 26 05 00 Common Work Results – Electrical.

Part 2 Products

2.0 EQUIPMENT

.1 Rod electrodes: copper clad steel, 19mm dia. by 3 m long.

.2 Plate electrodes: copper surface area minimum 0.2 m^3, 1.5mm thick, In accordance with the CEC.

.3 Grounding conductors: medium hard drawn, 7 strand, bare stranded copper, size as indicated on Contract Drawings.

.4 Insulated grounding conductors: green, size as indicated.

.5 Ground bus: copper, size as indicated, complete with insulated supports, fastenings, connectors.

.6 Grounding rod inspection well:

.1 High density polyethylene construction

.2 Minimum 250mm top opening.

.3 Bolt down cover with skid resistant surface.

.7 Non corroding accessories necessary for grounding system, type, size, material as indicated, including but not necessarily limited to:

.1 Grounding and bonding bushings.

.2 Protective type clamps.

.3 Bolted type conductor connectors.

.4 Bonding jumpers, straps.

.5 Pressure wire connectors.

Part 3 Execution

3.1 GENERAL INSTALLATION

.1 Install exterior buried grounding loop system as indicated on the Contract Drawings.

.2 Install complete permanent, continuous grounding system including, electrodes, conductors, connectors, accessories. Where EMT is used, run ground wire in conduit.

.3 Install connectors in accordance with manufacturer's instructions.

.4 Protect exposed grounding conductors from mechanical injury.

.5 Make buried connections, and connections to conductive water main, electrodes, using permanent mechanical connectors or inspectable wrought copper compression connectors to ANSI/IEEE 837.

.6 Use mechanical connectors for grounding connections to equipment provided with lugs.

.7 Soldered joints not permitted.

.8 Install bonding wire for flexible conduit, connected at both ends to grounding bushing, solderless lug, clamp or cup washer and screw. Neatly cleat bonding wire to exterior of flexible conduit.

.9 Install flexible ground straps for bus duct enclosure joints, where such bonding is not inherently provided with equipment.

.10 Connect building structural steel and metal siding to ground by welding copper to steel.

.11 Make grounding connections in radial configuration only, with connections terminating at single grounding point. Avoid loop connections.

.12 Bond single conductor, metallic armoured cables to cabinet at supply end.

3.2 INSPECTION WELL

.1 Install grounding stud, electrode, size as indicated stranded copper conductor in each inspection well as indicated on Contract Drawings.

.2 Install ground rod in each inspection well so that top projects through bottom of maintenance hole. Provide with lug to which grounding connection can be made. Confirm ground resistance meets or exceeds Canadian Electrical Code minimum requirements (25 Ohms).

3.3 ELECTRODES

.1 Install rod electrodes and make grounding connections within inspection wells.

.2 Bond separate, combine multiple electrodes together, if separate.

.3 Size copper conductors for connections to electrodes, sized as indicated on Contract Drawings.

.4 Make special provision for installing electrodes that will give acceptable resistance to ground value where rock or sand terrain prevails. Ground as indicated.

3.4 SYSTEM AND CIRCUIT GROUNDING

.1 Install system and circuit grounding connections to neutral secondary 120V system.

3.5 EQUIPMENT GROUNDING

.1 Install grounding connections to typical equipment included in, but not necessarily limited to following list. Service equipment, transformers, switchgear, duct systems, frames of motors, motor control centres, starters, control panels, building steel work, generators, elevators and escalators, distribution panels, outdoor lighting.

3.6 JUNCTION BOXES AND VAULTS

.1 Bond lids of in-ground junction boxes and vaults.

3.7 MASTER GROUND BUS

.1 Install copper grounding bus mounted on insulated supports on wall of electrical kiosk.

.2 Ground items of electrical equipment in electrical kiosk to ground bus with individual copper connections, sized as indicated on the Contract Drawings.

.3 Ground items of water system to ground bus with copper connections, sized as indicated on the Contract Drawings.

3.8 FIELD QUALITY CONTROL

.1 Perform tests in accordance with Technical Specification 26 05 00 Common Work Results – Electrical and Technical Specification 26 05 10 Testing and Commissioning.

.2 Perform ground continuity and resistance tests using method appropriate to site conditions and to approval of Contract Administrator and Government Authority having jurisdiction over installation.

.3 Perform tests before energizing electrical system.

.4 Disconnect ground fault indicator during tests.

END SECTION

TABLE OF CONTENTS

Part 1 General 2
1.0 Documents 2
1.1 Scope 2
1.2 Related Technical Specifications 2
1.3 Regulatory Requirements 2
1.4 Shop Drawings and Submittals 2
1.5 Delivery, Storage and Handling 2
Part 2 Products 2
2.0 Support Channels and Stanchions 2
Part 3 Execution 3
3.1 Installation 3

Revision History

Rev. No.	Date	Description of Revisions	Prep. By	Rev. By
-	May 29, 2026	Issued for Tender	JB	MS

Part 1 General

1.0 DOCUMENTS

.1 This Technical Specification forms a part of the Contract Documents and is to be read, coordinated, and implemented in conjunction with the Contract Documents.

1.1 SCOPE

.1 Materials and installation for hangers and supports for electrical systems.

1.2 RELATED TECHNICAL SPECIFICATIONS

.1 Technical Specification 26 05 00 Common Work Results – Electrical

.2 Technical Specification 26 05 02 Seismic Restraint

1.3 REGULATORY REQUIREMENTS

.1 American National Standards Institute (ANSI)/Institute of Electrical and Electronics Engineers (IEEE)

.1 ANSI/IEEE 837-02, Qualifying Permanent Connections Used in Substation Grounding.

1.4 SHOP DRAWINGS AND SUBMITTALS

.1 Submit Shop Drawings in accordance with Section 26 05 00 Common Work Results – Electrical.

1.5 DELIVERY, STORAGE AND HANDLING

.1 Deliver, store and handle materials in accordance with Technical Specification 26 05 00 Common Work Results – Electrical.

Part 2 Products

2.0 SUPPORT CHANNELS AND STANCHIONS

.1 Select channel as indicated in the Contract Drawings:

.1 U shape, stainless steel, size 41 x 41 mm, 2.5 mm thick, surface mounted and suspended with stainless steel hardware.

.2 All materials to assemble stanchions shall be from same manufacturer.

.2 Wire and cable ties: nylon ‘Ty-rap’ or approved equal for wiring and control cable. Velcro cable wraps for data cables.

Part 3 Execution

3.1 INSTALLATION

.1 Refer to Technical Specification 26 05 02 – Seismic Restraint.

.2 Contractor to note that the intent of this Technical Specification is for the Contractor to provide under the base contract all seismic restraint of electrical equipment.

.3 Support equipment, conduit or cables using clips, spring loaded bolts, cable clamps designed as accessories to basic channel members.

- .1 One-hole stainless steel straps to secure surface conduits and cables 53 mm and smaller.
- .2 Two-hole stainless steel straps for conduits and cables larger than 53 mm.

.4 For surface mounting of two or more conduits use channels at 1500 mm on centre spacing.

.5 Provide metal brackets, frames, hangers, clamps and related types of support structures where indicated or as required to support conduit and cable runs.

.6 Ensure adequate support for raceways and cables dropped vertically to equipment where there is no wall support.

.7 Do not use wire lashing or perforated strap to support or secure raceways or cables.

.8 Do not use supports or equipment installed for other trades for conduit or cable support except with permission of other trade and approval of Contract Administrator.

.9 Install fastenings and supports as required for each type of equipment cables and conduits, and in accordance with manufacturer's installation recommendations.

END SECTION

TABLE OF CONTENTS

Part 1 General 2
1.0 Documents 2
1.1 Scope 2
1.2 Related Technical Specifications 2
1.3 Regulatory Requirements 2
1.4 Shop Drawings and Submittals 2
1.5 Delivery, Storage and Handling 2
Part 2 Products 2
2.0 Splitters 2
2.1 Junction and Pull Boxes 3
2.2 Explosion Proof Junction Boxes 3
2.3 Terminal and Pull Boxes 3
2.4 Cabinets 4
Part 3 Execution 4
3.0 Splitters 4
3.1 Junction, Pull Boxes and Cabinets Installation 4
3.2 Identification 5

Revision History

Rev. No.	Date	Description of Revisions	Prep. By	Rev. By
-	May 29, 2026	Issued for Tender	JB	MS

Part 1 General

1.0 DOCUMENTS

.1 This Technical Specification forms a part of the Contract Documents and is to be read, coordinated, and implemented in conjunction with all other parts.

1.1 SCOPE

.1 Materials and installation for splitters, junction, pull boxes, and cabinets.

1.2 RELATED TECHNICAL SPECIFICATIONS

.1 Technical Specification 26 05 00 Common Work Results – Electrical

.2 Technical Specification 26 05 34 Conduits, Conduit Fastenings and Conduit Fittings

.3 Technical Specifications 26 27 16 Electrical Cabinets and Enclosures

1.3 REGULATORY REQUIREMENTS

.1 Canadian Standards Association (CSA International)

.1 CSA C22.1, Canadian Electrical Code, Part 1, Current Edition.

.2 CSA C22.2 No. 76, Splitters.

.3 CSA-C22.2 No. 85, Rigid PVC Boxes and Fittings.

1.4 SHOP DRAWINGS AND SUBMITTALS

.1 Submit in accordance with Technical Specification 26 05 00 Common Work Results – Electrical.

1.5 DELIVERY, STORAGE AND HANDLING

.1 Deliver, store and handle materials in accordance with Technical Specification 26 05 00 Common Work Results – Electrical.

Part 2 Products

2.0 SPLITTERS

.1 Compliance: CSA C22.2 No. 76, Splitters.

.2 Sheet metal enclosure with welded corners and formed hinged gasketed cover suitable for locking in closed position.

.3 Main and branch lugs or connection bars to match required size and number of connecting conductors as specified.

.4 At least three spare terminals on each set of lugs in splitters.

2.1 JUNCTION AND PULL BOXES

.1 RPVC construction sized to suit. Screw on flat covers. All mounting hardware to be stainless steel.

.2 Internal dielectric barrier for separating controls and power terminations only where indicated on Contract Drawings.

2.2 EXPLOSION PROOF JUNCTION BOXES

.1 Aluminum construction sized to suit.

.2 Certification: Class 1, Division 1 & 2.

.3 Internal back panel for terminal block mounting.

.4 Gasketed, front cover.

.5 Stainless steel hardware.

2.3 TERMINAL AND PULL BOXES

.1 Intended for surface mounting, except as otherwise specified.

.2 Weatherproof, Style WP1

.1 Copper-free cast aluminum, Type 4.

.2 Hinged door if any one dimension exceeds 300 mm.

.3 Manufactured breather, designed to maintain weatherproof classification of enclosure.

.4 When used as terminal box, equipped with mounting pan and terminal strip.

.3 Weatherproof, Style WP2

.1 Same features as for Style WP1, except made of sheet aluminum, minimum 2.3 mm thick.

.2 Dripshield.

.4 Weather- and Corrosion-Proof, Style WP3

.1 Same features as for Style WP1, except Type 4X enclosure, made of 316 stainless steel.

.5 Weather- and Corrosion-Proof, Style WP4

.1 Same features as for Style WP1, except non-metallic, Type 4X fibreglass enclosure.

.2 Quick-release latches.

.6 Indoor Dry Location Non-process Area, Style GP5

.1 Welded steel or aluminum Type 12 enclosure.

.2 Hinged cover with quick-release latch or automotive handle, for enclosures that exceed 300 mm in width or height.

.7 Watertight, Style WT

.1 Same as weatherproof styles WP1 to WP 4, except without breather.

.2 Explosion-proof, Style XP

.3 Same features as for Style WP1, except, in addition to being weatherproof, also suitable for the hazardous location specified.

2.4 CABINETS

.1 Intended for surface mounting, except as otherwise specified.

.2 Enclosure rating is to be the higher rating of the rating shown in the drawings and the rating based upon location of installation.

.3 Single - or double-door construction with 316 stainless steel full-length hinge.

.4 Minimum standard: formed and welded Type 12 construction, of minimum 1.8 mm thick sheet steel, with automotive door handle.

.5 For process and outdoor areas and below-grade valve chambers: formed and welded Type 4X construction of minimum 2 mm thick sheet aluminum, with 316 stainless steel door clamps and hardware.

.6 Full-size equipment mounting pan of formed sheet metal.

Part 3 Execution

3.0 SPLITTERS

.1 Install splitters and mount plumb, true, and square to the building lines.

.2 Extend splitters full length of equipment arrangement except where specified otherwise.

3.1 JUNCTION, PULL BOXES AND CABINETS INSTALLATION

.1 Install pull boxes in inconspicuous but accessible locations.

.2 Mount cabinets with top not higher than 2 m above finished floor, unless otherwise indicated.

.3 Install pole mount enclosures as indicated.

.4 Install equipment and terminal blocks as indicated in cabinets.

.5 Only main junction and pull boxes are indicated. Install additional pull boxes as required by CSA C22.1.

3.2 IDENTIFICATION

.1 Provide equipment identification in accordance with Technical Specification 26 05 00 Common Work Results - Electrical.

END SECTION

TABLE OF CONTENTS

Part 1 General 2
1.0 Documents 2
1.1 Scope 2
1.2 Related Technical Specifications 2
1.3 Regulatory Requirements 2
1.4 Shop Drawings and Submittals 2
1.5 Delivery, Storage and Handling 2
Part 2 Products 2
2.0 Outlet and Conduit Boxes General 2
2.1 Conduit Boxes 3
2.2 Weather-Proof Outlet Boxes 3
2.3 Hazardous Area Outlet Boxes 3
2.4 Fittings - General 3
Part 3 Execution 3
3.0 Installation 3
3.1 Identification 4

Revision History

Rev. No.	Date	Description of Revisions	Prep. By	Rev. By
-	May 29, 2026	Issued for Tender	JB	MS

Part 1 General

1.0 DOCUMENTS

.1 This Technical Specification forms a part of the Contract Documents and is to be read, coordinated, and implemented in conjunction with all other parts.

1.1 SCOPE

.1 Materials and installation for outlet boxes, conduit boxes, and fittings.

1.2 RELATED TECHNICAL SPECIFICATIONS

.1 Technical Specification 26 05 00 Common Work Results – Electrical

1.3 REGULATORY REQUIREMENTS

.1 Canadian Standards Association (CSA International)

.1 CSA C22.1, Canadian Electrical Code, Part 1, Current Edition.

1.4 SHOP DRAWINGS AND SUBMITTALS

.1 Submit in accordance with Technical Specification 26 05 00 Common Work Results – Electrical.

1.5 DELIVERY, STORAGE AND HANDLING

.1 Deliver, store and handle materials in accordance with Technical Specification 26 05 00 Common Work Results – Electrical.

Part 2 Products

2.0 OUTLET AND CONDUIT BOXES GENERAL

.1 Size boxes in accordance with CSA C22.1.

.2 102 mm square or larger outlet boxes as required for special devices.

.3 Gang boxes where wiring devices are grouped.

.4 Blank cover plates for boxes without wiring devices.

.5 240V outlet boxes for 240V switching devices.

.6 Combination boxes with barriers where outlets for more than one system are grouped.

.7 Provide clear while-in-use gasketed cover for interior outlets, where indicated in Contract Drawings.

2.1 CONDUIT BOXES

.1 FD NEMA 4X RPVC boxes with factory-threaded hubs, mounting feet, and gasketed covers, where indicated in Contract Drawings.

.2 Provide clear while-in-use gasketed cover for interior outlets, where indicated in Contract Drawings.

2.2 WEATHER-PROOF OUTLET BOXES

.1 RPVC boxes for outlets rated for outdoor environments.

.2 Connected to TECK 90 cables as required, minimum size 102 x 54 x 48 mm.

.3 Provide weatherproof clear lockable while-in-use covers for all GFI locations, where indicated.

2.3 HAZARDOUS AREA OUTLET BOXES

.1 Certification: Class I, Divisions 1 and 2.

.2 Material: copper-free cast aluminum body and cover

.3 Finish: Aluminum

.4 Size: as required.

.5 Mounting: elevated mounting feet to allow cable connector termination and removal when surface mounted.

2.4 FITTINGS - GENERAL

.1 Bushing and connectors with nylon insulated throats.

.2 Knock out fillers to prevent entry of debris.

.3 Conduit outlet bodies for conduit up to 32 mm and pull boxes for larger conduits.

Part 3 Execution

3.0 INSTALLATION

.1 Recess mount lighting and outlet boxes located on building exterior.

.2 Surface mount boxes located in building interior.

.3 Support boxes independently of connecting conduits.

.4 Fill boxes with paper, sponges or foam or similar approved material to prevent entry of debris during construction. Remove upon completion of the work.

.5 Provide correct size of openings in boxes for conduit, mineral insulated and armoured cable connections. Reducing washers are not allowed.

.6 Vacuum clean interior of outlet boxes before installation of wiring devices.

3.1 IDENTIFICATION

.1 Provide equipment identification in accordance with Technical Specification 26 05 00 Common Work Results - Electrical.

.2 Install identification labels indicating circuit, voltage, and phase.

END SECTION

TABLE OF CONTENTS

Part 1 General 2
1.0 Documents 2
1.1 Scope 2
1.2 Related Technical Specifications 2
1.3 Regulatory Requirements 2
1.4 Shop Drawings and Submittals 2
1.5 Delivery, Storage and Handling 3
Part 2 Products 3
2.0 Conduits 3
2.1 Conduit Fastenings 3
2.2 Conduit Fittings 3
2.3 Expansion Fittings for Rigid Conduit 3
2.4 Hazardous Area Conduit Seals 4
2.5 Pull Cord 4
Part 3 Execution 4
3.0 Manufacturer's Instructions 4
3.1 Installation 4
3.2 Surface Conduits 5
3.3 Underground Conduits 5

Revision History

Rev. No.	Date	Description of Revisions	Prep. By	Rev. By
-	May 29, 2026	Issued for Tender	JB	MS

Part 1 General

1.0 DOCUMENTS

.1 This Section of the Specification forms a part of the Contract Documents and is to be read, coordinated, and implemented in conjunction with all other parts.

1.1 SCOPE

.1 Materials and installation for conduits, conduit fastenings and conduit fittings.

1.2 RELATED TECHNICAL SPECIFICATIONS

.1 Technical Specification 26 05 00 Common Work Results – Electrical

.2 Technical Specification 26 05 21 Wires and Cables (0-1000V)

.3 Technical Specification 26 27 16 Electrical Cabinets and Enclosures

1.3 REGULATORY REQUIREMENTS

.1 Canadian Standards Association (CSA International)

.1 CSA C22.1, Canadian Electrical Code, Part 1, Current Edition.

.2 CAN/CSA C22.2 No.18.3 12, Conduit, Tubing, and Cable Fittings

.3 CAN/CSA C22.2 No.18.4-04, Hardware for the Support of Conduit, Tubing and Cable

.4 CSA C22.2 No. 56, Flexible Metal Conduit and Liquid Tight Flexible Metal Conduit.

.5 CSA C22.2 No. 45.2-08, Electrical Rigid Metal Conduit – Aluminum, Red Brass, and Stainless Steel.

.6 CSA C22.2 No. 83-M1985 – Electrical Metallic Tubing

.7 CSA C22.2 No. 211.2 06, Rigid PVC (Unplasticized) Conduit.

.8 CAN/CSA C22.2 No. 227.2.1-04, Liquid Tight Flexible Nonmetallic Conduit.

1.4 SHOP DRAWINGS AND SUBMITTALS

.1 Submit in accordance with Technical Specification 26 05 00 Common Work Results – Electrical.

.2 Quality assurance submittals:

.1 Test reports: submit certified test reports.

.2 Certificates: submit certificates signed by manufacturer certifying that materials comply with specified performance characteristics and physical properties.

.3 Instructions: submit manufacturer's installation instructions.

1.5 DELIVERY, STORAGE AND HANDLING

.1 Deliver, store and handle materials in accordance with Technical Specification 26 05 00 Common Work Results – Electrical.

Part 2 Products

2.0 CONDUITS

.1 Rigid aluminum conduit: to CSA C22.2 No. 45.2.

.2 Rigid PVC conduit: to CSA C22.2 No. 211.2.

.3 Flexible metal conduit: to CSA C22.2 No. 56, liquid-tight flexible metal.

.4 Flexible PVC conduit: to CAN/CSA-C22.2 No. 227.2.1.

2.1 CONDUIT FASTENINGS

.1 One-hole stainless steel straps to secure surface conduits 53 mm and smaller. Two-hole stainless steel straps for conduits larger than 53 mm.

.2 Seismic beam clamps to secure conduits and supports to exposed steel work.

.3 Channel type supports for two or more conduits at 1500 mm oc.

.4 Threaded rods, 6 mm diameter, to support suspended channels.

.5 All conduit fastenings and supports shall be stainless steel.

2.2 CONDUIT FITTINGS

.1 Fittings: manufactured for use with conduit specified. Coating: same as conduit.

.2 Factory "elbows" where 90-degree bends are required for 27 mm and larger conduits.

.3 Watertight connectors and couplings for EMT.

.1 Set-screws are not acceptable.

2.3 EXPANSION FITTINGS FOR RIGID CONDUIT

.1 Weatherproof expansion fittings with internal bonding assembly suitable for 100 mm linear expansion.

.2 Watertight expansion fittings with integral bonding jumper suitable for linear expansion and 19 mm deflection.

.3 Weatherproof expansion fittings for linear expansion at entry to panel.

2.4 DEFLECTION COUPLINGS

.1 Contractor to utilize rigid metal conduit nipples and rigid metal-to-PVC conduit adapters.

.2 Hubs: Feraloy iron alloy – hot dip galvanized

.3 Outer jacket: Molded neoprene – natural (black)

.4 Jacket clamps: Stainless steel – natural

.5 Inner sleeve: Neoprene polyester fabric with steel coil

.6 Bonding strap: Braided tinned copper

.7 Sized to suit conduit size.

.8 Basis of Design: Eaton XD Deflection Coupling

2.5 HAZARDOUS AREA CONDUIT SEALS

.1 Hazardous locations are identified on the Contract Drawings. Provide seal fittings for conduit systems in hazardous locations as required by the Canadian Electrical Code.

.2 Provide explosion proof EYS fittings as indicated.

.3 Sealing compound shall be installed after the conductors are installed, tested, and accepted.

2.6 PULL CORD

.1 Polypropylene

.1 Minimum tensile strength of 1.1kN.

.2 Mildew and rot resistant.

Part 3 Execution

3.0 MANUFACTURER'S INSTRUCTIONS

.1 Compliance: comply with manufacturer's written recommendations or specifications, including product technical bulletins, handling, storage and installation instructions, and datasheets.

3.1 INSTALLATION

.1 Install conduits to conserve headroom in exposed locations and cause minimum interference in spaces through which they pass.

.2 Use rigid PVC conduit underground.

.3 Use liquid tight flexible metal conduit for connection to devices, motors, or vibrating equipment with the exception of connections made using armoured cable.

.4 Install conduit sealing fittings in hazardous areas.

.1 Fill with compound.

.5 Minimum conduit size for lighting and power circuits: 21mm

.6 Bend conduit cold:

.1 Replace conduit if kinked or flattened more than 1/10th of its original diameter.

.7 Mechanically bend steel conduit over 21 mm diameter.

.8 Field threads on rigid conduit must be of sufficient length to draw conduits up tight.

.9 Install polypropylene fish cord in empty conduits.

.10 Remove and replace blocked conduit sections.

.1 Do not use liquids to clean out conduits.

.11 Dry conduits out before installing wire.

3.2 SURFACE CONDUITS

.1 Run parallel or perpendicular to building lines.

.2 Group conduits wherever possible on suspended or surface channels.

.3 Do not pass conduits through structural members except as indicated.

3.3 UNDERGROUND CONDUITS

.1 Refer to Technical Specification 26 05 43 01 Installation of Cables in Trenches and in Ducts for installation of cable procedures.

.2 The Contractor shall provide and install all necessary bends, couplings, reducers, bell end fittings, plugs, caps and adaptors of the same product material as the conduit to ensure a complete installation.

.3 All conduits shall drain towards junction boxes. Spacing between power and communications conduits for longitudinal runs shall be 300mm (unless concrete encased). The spacing may be reduced to 50mm at crossover points and where the conduits enter and exit junction boxes and pull pits.

.4 The Contractor shall not use any factory bends in the conduit runs except where shown on the Contract Drawings or as approved by the Contract Administrator. Where factory 90-degree bends are approved, the radius shall be greater than 900mm.

.5 All conduits shall be verified and cleaned using the following procedure:

.1 To verify integrity of conduit, pull through each conduit duct a hard rubber mandrel, not less than 300mm long and of a diameter 6mm less than the internal diameter of the duct, preceded by a swab of suitable diameter to remove sand, earth and other foreign materials.

.2 Notify Contract Administrator in the event of conduit failure.

.3 Clean ducts before laying. Cap both ends during Construction and after installation to prevent entry of any foreign materials.

.4 Install pull line.

.5 Terminate conduit ends in the junction box.

.6 Clean and vacuum junction boxes.

.7 Locations shall be laid out by the Contractor and field reviewed by the Contract Administrator prior to installation.

.6 Waterproof joints (PVC excepted) with heavy coat of bituminous paint.

.7 Trench Markers:

.1 Concrete type cable markers: Minimum 600 mm x 600 mm x 100 mm, with words: "cable," "conduit," or additional circuit identification if so directed by Engineer, impressed in top surface, with arrows to indicate change in direction of conduit runs.

.8 Warning Tape:

.1 Detectable by a pipe/cable locator or metal detector from above the undisturbed ground.

.2 Minimum 50 mm wide with an aluminum foil core laminated between two layers of 3.5 mil thickness polyester plastic.

.3 Plastic colour coding: red for electrical lines, orange for telephone lines, and orange for optic fibre cables.

.4 Imprint a warning continuously along the length, with message reading similar to: "CAUTION – BURIED ELECTRIC (TELEPHONE) LINE BELOW".

.9 Conduit Spacers:

.1 Preformed, rigid plastic spacers designed for direct burial and concrete encasement.

.2 Base and intermediate spacers to suit conduit trade size.

.3 Snap feature or non-metallic ties to obtain required configuration.

END SECTION

TABLE OF CONTENTS

Part 1 General 2
1.0 Documents 2
1.1 Related Technical Specifications 2
1.2 Regulatory Requirements 2
1.3 Scope 2
1.4 Shop Drawings and Submittals 2
1.5 Delivery, Storage and Handling 2
Part 2 Products 2
2.0 Not Used 2
Part 3 Execution 3
3.0 Cable Installation in Ducts 3
3.1 Field Quality Control 3

Revision History

Rev. No.	Date	Description of Revisions	Prep. By	Rev. By
-	May 29, 2026	Issued for Tender	JB	MS

Part 1 General

1.0 DOCUMENTS

.1 This Technical Specification forms a part of the Contract Documents and is to be read, coordinated, and implemented in conjunction with all other parts.

1.1 RELATED TECHNICAL SPECIFICATIONS

.1 Technical Specification 26 05 00 Common Work Results – Electrical

.2 Technical Specification 26 05 28 Grounding – Secondary

1.2 REGULATORY REQUIREMENTS

.1 Canadian Standards Association (CSA International)

.1 CSA C22.1, Canadian Electrical Code, Part 1, Current Edition.

1.3 SCOPE

.1 Installation of cables in trenches and in ducts.

.1 Wherever the term “duct” appears, it also applies equally to conduit; similarly, the term “cable” also means wires and conductors.

1.4 SHOP DRAWINGS AND SUBMITTALS

.1 Submit in accordance with Technical Specification 26 05 00 Common Work Results – Electrical.

.2 Quality assurance submittals:

.1 Test reports: submit certified test reports.

.2 Certificates: submit certificates signed by manufacturer certifying that materials comply with specified performance characteristics and physical properties.

.3 Instructions: submit manufacturer's installation instructions.

1.5 DELIVERY, STORAGE AND HANDLING

.1 Deliver, store and handle materials in accordance with Technical Specification 26 05 00 Common Work Results – Electrical.

Part 2 Products

2.0 NOT USED

Part 3 Execution

3.0 CABLE INSTALLATION IN DUCTS

.1 Install cables in ducts as indicated in Contract Drawings.

.2 Do not pull spliced cables inside ducts.

.3 Install multiple cables in duct simultaneously.

.4 Use CSA approved lubricants of type compatible with cable jacket to reduce pulling tension.

.5 Install instrumentation (4-20ma analog) cables in separate ducts from other cables as specified in the Contract Drawings.

.6 Install digital communication cables in separate ducts from other cables as specified in the Contract Drawings.

.7 To facilitate matching of colour coded multiconductor control cables reel off in same direction during installation.

.8 Allow extra length of cable in loop form at splice boxes, pullpits and manholes as per good trade practice.

.9 Leave a pull rope in each conduit after installation of cables to permit installation of additional cables after the completion of the Work.

.10 Before pulling cable into ducts and until cables are properly terminated, seal ends of lead covered cables with wiping solder; seal ends of non-leaded cables with moisture seal tape.

.11 After installation of cables, seal duct ends with duct sealing compound.

.12 Compliance: comply with manufacturer's written recommendations or specifications, including product technical bulletins, handling, storage and installation instructions, and datasheets.

.13 Duct Standard of Acceptance: Phoenix Contact CD, Panduit G2X3W, or approved equivalent.

3.1 FIELD QUALITY CONTROL

.1 Perform tests in accordance with Technical Specification 26 05 00 Common Work Results - Electrical.

.2 Perform tests using qualified personnel. Provide necessary instruments and equipment.

.3 Check phase rotation and identify each phase conductor of each feeder.

.4 Check each feeder for continuity, short circuits, and grounds. Ensure resistance to ground of circuits is not less than 50 megohms.

.5 Pre acceptance tests.

.1 After installing cable but before splicing and terminating, perform insulation resistance test with 1000V megger on each phase conductor.

.2 Check insulation resistance after each splice and/or termination to ensure that cable system is ready for acceptance testing.

.6 Provide Contract Administrator with list of test results showing location at which each test was made, circuit tested and result of each test.

.7 Remove and replace entire length of cable if cable fails to meet any of test criteria.

END SECTION

TABLE OF CONTENTS

Part 1 General 2
1.0 Documents 2
1.1 Scope 2
1.2 Related Technical Specifications 2
1.3 Regulatory Requirements 2
1.4 Shop Drawings and Submittals 2
1.5 Delivery, Storage and Handling 2
Part 2 Products 2
2.0 Performance and Design Criteria 2
Part 3 Execution 4
3.0 Installation 4
3.1 Field Quality Control 5

Revision History

Rev. No.	Date	Description of Revisions	Prep. By	Rev. By
-	May 29, 2026	Issued for Tender	JB	MS

Part 1 General

1.0 DOCUMENTS

.1 This Technical Specification forms a part of the Contract Documents and is to be read, coordinated and implemented in conjunction with all other parts.

1.1 SCOPE

.1 Materials and installation of fractional horsepower motors.

1.2 RELATED TECHNICAL SPECIFICATIONS

.1 Technical Specification 26 05 00 Common Work Results – Electrical

1.3 REGULATORY REQUIREMENTS

.1 Canadian Standards Association (CSA International)

- .1 CSA C22.2 No. 100, Motors and Generators.
- .2 CSA C22.2 No. 145, Motors and Generators for Use in Hazardous Locations.

.2 Electrical and Electronic Manufacturers' Association of Canada (EEMAC)

- .1 EEMAC M1-7, Standard for Motors and Generators.

.3 NEMA Std. MG1. Motors and Generators.

.4 IEEE Std 114. IEEE Standard Test Procedure for Single-Phase Induction Motors

1.4 SHOP DRAWINGS AND SUBMITTALS

.1 Submit in accordance with Technical Specification 26 05 00 Common Work Results – Electrical.

1.5 DELIVERY, STORAGE AND HANDLING

.1 Deliver, store and handle materials in accordance with Technical Specification 26 05 00 Common Work Results – Electrical.

Part 2 Products

2.0 PERFORMANCE AND DESIGN CRITERIA

.1 General:

.1 Motors are to be approved and bear CSA labels or similar certification marks or labels that are acceptable to Technical Safety BC.

.2 Unless otherwise specified, motors 1/3 hp and smaller to be squirrel cage, single-phase, capacitor start, induction run type.

.3 Construction features listed in this Section may be as normally supplied by the equipment manufacturer.

.4 Service factor of 1.15 at 40 degrees C ambient, Class F insulation and non-hygroscopic windings, Class B temperature rise unless otherwise specified.

.5 Provide copper rotor material and copper windings.

.6 Motor nameplate shall be engraved or stamped 316 stainless steel. Information shall include those items enumerated in NEMA Standard MG1, as applicable. Nameplate shall be permanently fasten to the motor frame and shall be visibly position for inspection.

.7 Provide corrosion resistant hardware.

.8 Motors shall include integral overload and overheating protection per CSA Section 28 or shall include an external motor starter installed as required to provide overload and overheating protection.

.2 Rating:

.1 Unless specified otherwise, motors to be rated for operation at 115VAC / 1PH / 60HZ, and continuous-time rated in conformance with NEMA Standard MG1, paragraph 10.35.

.2 Unless specified otherwise, for valve actuators and for special applications, motors to be rated for operation at 600VAC / 3PH / 60HZ. If 600V is not specified on Drawings, then motors to be rated 208VAC / 3PH / 60HZ.

.3 Motors shall be approved and listed with CSA certification for environments installed. This also includes classification, division, and surface temperature markings for hazardous locations.

.4 Motors are capable of starting and running continually when the terminal voltage is from +10 percent to -10 percent of nameplate voltage.

.3 Enclosures

.1 Unless otherwise specified, provide motors with totally enclosed fan cooled or totally enclosed non-ventilated enclosures.

.2 Provide explosion-proof motors marked or labeled for Class I, Division 1, Group D hazardous locations by CSA or a similar certification agency that is acceptable to Technical Safety BC.

.3 Provide an over-temperature device in the enclosure to detect and automatically de-energize the motor.

.4 Connection Boxes:

.1 Provide explosion proof conduit box for explosion proof motors.

.2 Provide a grounding lug within the box for a cable or raceway ground connection.

.3 Boxes shall be designed to rotate in order to permit installation in any of four position 90 degrees apart.

.4 Provide oversized boxes, a minimum of one size larger than standard.

.5 Connection box shall be copper-free aluminum or approved equal for process areas.

.4 Service and Operating Conditions:

.1 Unless specified otherwise, provide motors suitable for continuous operation at an elevation of 300 m above sea level.

.2 Motors installation location shall be suitable for environmental conditions.

.3 Motors shall be rated for project site condition as specified in Technical Specification 26 05 00 Common Work Results - Electrical

.4 Motor shall de-energize upon the loss of a single phase of a three phase power supply.

.5 Motor shall de-energize within 8 seconds in the event such as a stall or jam equipment.

Part 3 Execution

3.0 INSTALLATION

.1 Install motors and valve actuators per manufacturer’s instructions.

.2 Dry out motor if dampness present in accordance with manufacturer's instructions.

.3 Make wiring connections per manufacturer’s recommendations. Include connections for:

.1 Power

.2 Pump Monitoring Sensors

.3 Exhaust system and muffler model and type.

.4 Check for correct direction of rotation.

3.1 FIELD QUALITY CONTROL

.1 Perform tests in accordance with Technical Specification 26 05 00 Common Work Results - Electrical.

END OF SECTION

TABLE OF CONTENTS

Part 1 General 2
1.0 Documents 2
1.1 Scope 2
1.2 Related Technical Specification 2
1.3 Regulatory Requirements 2
1.4 Shop Drawings and Submittals 2
1.5 Delivery, Storage and Handling 2
Part 2 Products 2
2.0 Regulatory Requirements 2
2.1 Design Criteria 3
2.2 Configuration, Components and Features 3
2.3 Submersible Pump Motors 4
2.4 Power Factor Correction Capacitor Sizing 4
Part 3 Execution 4
3.0 Installation 4
3.1 Field Quality Control 5

Revision History

Rev. No.	Date	Description of Revisions	Prep. By	Rev. By
-	May 29, 2026	Issued for Tender	JB	MS

Part 1 General

1.0 DOCUMENTS

.1 This Technical Specification forms a part of the Contract Documents and is to be read, coordinated and implemented in conjunction with all other parts.

1.1 SCOPE

.1 Materials and installation of motors from 0.746kW to 149kW.

1.2 RELATED TECHNICAL SPECIFICATION

.1 Technical Specification 26 05 00 Common Work Results – Electrical

1.3 REGULATORY REQUIREMENTS

.1 Canadian Standards Association (CSA International)

.1 CSA C22.2 No. 100, Motors and Generators.

.2 CSA C22.2 No. 145, Motors and Generators for Use in Hazardous Locations.

.2 National Electrical Manufacturers' Association (NEMA)

.1 NEMA MG 1-2016, Motors and Generators.

1.4 SHOP DRAWINGS AND SUBMITTALS

.1 Submit in accordance with Technical Specification 26 05 00 Common Work Results – Electrical.

1.5 DELIVERY, STORAGE AND HANDLING

.1 Deliver, store and handle materials in accordance with Technical Specification 26 05 00 Common Work Results – Electrical.

Part 2 Products

2.0 REGULATORY REQUIREMENTS

.1 Motors are to be approved and bear CSA labels or similar certification marks or labels that are acceptable to Technical Safety BC.

.2 Motor Efficiency

.1 Motors to meet or exceed efficiency specified in the Energy Efficiency Act, Energy Efficiency Standards Regulation, B.C. Reg. 389/93 and Canada's Energy Efficiency Act and Ministry of Natural Resources Canada (NRCan) Energy Efficiency Regulations.

.2 Test motor efficiency as specified in CSA C390.

2.1 DESIGN CRITERIA

.1 Rating:

.1 Motors to be 600VAC, 3-phase, 60Hz, inverter duty rated, unless otherwise specified.

.2 Motors are capable of starting and running continually when the terminal voltage is from +10 percent to -10 percent of nameplate voltage.

.3 Motor to be rated no smaller than the hp rating specified on the Contract Drawings unless approved by the Engineer after review of complete documentation submitted by the Contractor.

.2 Standard of Acceptance: Flygt, three-phase, solids handling pumps (one pump is to be complete with a mixing flush valve), or approved alternate.

2.2 CONFIGURATION, COMPONENTS AND FEATURES

.1 Boxes

.1 Provided oversized motor terminal boxes, sized one size larger than standard as a minimum, diagonally split and gasketed complete with threaded hub for conduit or Teck cable entry. Provide NEMA 4 terminal boxes for ODP and TEFC motors. Provide NEMA 7 terminal boxes for explosion-proof motors. Motor conductors in terminal boxes to be connected to R90 compression lug connectors.

.2 Provide a grounding lug located within the box for the cable or raceway ground connection.

.3 Provide separate conduit boxes for temperature devices and space heaters.

.2 Space Heaters

.1 Where specified, furnish motors with space heaters to prevent condensation inside the motor enclosure after motor shutdown and maintain the temperature of the winding at not less than 5-degree C above outside ambient temperature.

.3 Motor Over-Temperature Protection

.1 Provide stator winding over-temperature protection on motors rated 60 hp and larger. Motors rated less than 60 hp to have stator winding over-temperature protection where indicated by the Contract Drawings or if recommended by the driven equipment manufacturer.

.2 When specified as single-phase motor, provide with over temperature device in motor enclosure to detect and automatically de-energize the motor. Device shall self-reset after the motor cools.

2.3 SUBMERSIBLE PUMP MOTORS

.1 Provide stator winding over-temperature protection and seal leak detection in all submersible pump motors.

.2 Provide the power and monitoring cables to the motor with oil resistant chloroprene rubber of sufficient length, when required.

.3 The motor and cable shall be capable of continuous submergence under water without loss of watertight integrity to a depth of 20 metres.

.4 Motor to be sufficiently cooled by the surrounding environment and pumped media.

.5 Each pump should be configured with a reverse jog button.

2.4 POWER FACTOR CORRECTION CAPACITOR SIZING

.1 The motor vendor to confirm the maximum capacitor size that may be connected to motors 50 hp and larger.

.2 Where power factor correction capacitors are specified, size the capacitor for the actual motor supplied. The capacitor sizes shown on the electrical one-line diagrams shall be revised to correct the power factor on the motor feeder to .95 with the actual motor supplied.

Part 3 Execution

3.0 INSTALLATION

.1 Install motors and valve actuators per manufacturer’s instructions.

.2 Dry out motor if dampness present in accordance with manufacturer's instructions.

.3 Make wiring connections per manufacturer’s recommendations. Include connections for:

.1 Power

.2 Pump Monitoring Sensors

.4 Check for correct direction of rotation.

3.1 FIELD QUALITY CONTROL

.1 Perform tests in accordance with Technical Specification 26 05 00 Common Work Results - Electrical.

END SECTION

TABLE OF CONTENTS

Part 1 General 2
1.0 Documents 2
1.1 Scope 2
1.2 Related Technical Specifications 2
1.3 Regulatory Requirements 2
1.4 Shop Drawings and Submittals 2
1.5 Delivery, Storage and Handling 2
Part 2 Products 2
2.0 Manual On/Off Switching 2
Part 3 Execution 3
3.0 Manufacturer's Instructions 3
3.1 Installation 3
3.2 Field Quality Control 3

Revision History

Rev. No.	Date	Description of Revisions	Prep. By	Rev. By
-	May 29, 2026	Issued for Tender	JB	MS

Part 1 General

1.0 DOCUMENTS

.1 This Technical Specification forms a part of the Contract Documents and is to be read, coordinated and implemented in conjunction with all other parts.

1.1 SCOPE

.1 Materials and installation of low voltage lighting control devices.

1.2 RELATED TECHNICAL SPECIFICATIONS

.1 Technical Specification 26 05 00 Common Work Results – Electrical

1.3 REGULATORY REQUIREMENTS

.1 Canadian Standards Association (CSA International)

.1 CSA C22.2 No. 184.1, Solid-State Dimming Controls (Bi-national standard with UL 1472 updates).

1.4 SHOP DRAWINGS AND SUBMITTALS

.1 Submit in accordance with Technical Specification 26 05 00 Common Work Results – Electrical.

1.5 DELIVERY, STORAGE AND HANDLING

.1 Deliver, store and handle materials in accordance with Technical Specification 26 05 00 Common Work Results – Electrical.

Part 2 Products

2.0 MANUAL ON/OFF SWITCHING

.1 Individual switches ganged as indicated.

.2 Single or double pole, single or double throw as required to suit switching shown on drawings.

.3 Load rating of device shall be sufficient for size and type of lighting load being switched.

.4 Provide additional control contactors or relays for multi-circuit switching as required.

.5 Key operated where shown on Contract Drawings

.6 Motor rated where shown controlling motor circuit.

.7 Decora style commercial grade. Provide complete with cover plate. Refer to Technical Specification 26 27 26 Wiring Devices for cover plate requirements.

Part 3 Execution

3.0 MANUFACTURER'S INSTRUCTIONS

.1 Compliance: comply with manufacturer's written recommendations or specifications, including product technical bulletins, handling, storage and installation instructions, and datasheet.

3.1 INSTALLATION

.1 Locate and install equipment in accordance with manufacturer's recommendations and as indicated.

.2 Where lighting control devices are to be in close proximity, they shall be ganged with a common device box and cover plate, with voltage barriers as required.

3.2 FIELD QUALITY CONTROL

.1 Site Tests:

.1 Perform tests in accordance with Technical Specification 26 05 00 - Common Work Results for Electrical and Technical Specification 26 05 10 Testing and Commissioning.

.2 Demonstrate dimming systems operate as intended and there are no problems in starting lamps, nor in keeping them lit, and free of perceptible flicker at required settings of dimming intensity control.

END SECTION

TABLE OF CONTENTS

Part 1 General 2
1.0 Documents 2
1.1 Scope 2
1.2 Related Technical Specifications 2
1.3 Regulatory Requirements 2
1.4 Shop Drawings and Submittals 2
1.5 Delivery, Storage and Handling 2
Part 2 Products 2
2.0 Principal Transformer 2
2.1 Control Transformer 3
2.2 Equipment Identification 3
Part 3 Execution 3
3.0 Installation 3

Revision History

Rev. No.	Date	Description of Revisions	Prep. By	Rev. By
-	May 29, 2026	Issued for Tender	JB	MS

Part 1 General

1.0 DOCUMENTS

.1 This Technical Specification forms a part of the Contract Documents and is to be read, coordinated, and implemented in conjunction with all other parts.

1.1 SCOPE

.1 Materials and installation of transformers.

1.2 RELATED TECHNICAL SPECIFICATIONS

.1 Technical Specification 26 05 00 Common Work Results – Electrical

1.3 REGULATORY REQUIREMENTS

.1 Canadian Standards Association (CSA International)

.1 CSA C9-02, Dry-Type Transformers

.2 CAN/CSA-C22.2 No. 47-13, Air-cooled Transformers (Dry Type)

1.4 SHOP DRAWINGS AND SUBMITTALS

.1 Submit in accordance with Technical Specification 26 05 00 Common Work Results – Electrical.

1.5 DELIVERY, STORAGE AND HANDLING

.1 Deliver, store and handle materials in accordance with Technical Specification 26 05 00 Common Work Results – Electrical.

Part 2 Products

2.0 PRINCIPAL TRANSFORMER

.1 Use transformers of one manufacturer throughout the Project and in accordance with CAN/CSA C22.2 No. 47 and CSA C9.

.2 Design:

.1 Rating: As indicated on Contract Drawings.

.2 Configuration: As indicated on Contract Drawings.

.3 Type: ANN.

.4 Windings: Copper

.5 Voltage taps:

.1 Primary: 2.5%, 2 – FCAN, 2 – FCBN

.2 Secondary: Not Required

.6 Insulation: Class 220º C, 130 º C temperature rise

.7 Basic Insulation Level (BIL): standard

.8 Hipot: standard

.9 Average sound level: standard

.10 Impedance at 170ºC: standard

2.1 CONTROL TRANSFORMER

.1 Use transformers of one manufacturer throughout the Project and in accordance with CAN/CSA C22.2 No. 47 and CSA C9.

.2 Design:

.1 Rating: As indicated on Contract Drawings.

.2 Configuration: As indicated on Contract Drawings.

.3 Panel mount.

.4 Molded terminal blocks for primary and secondary connections.

.5 Windings: Copper

.6 Voltage taps: standard

.7 Insulation: Class 130º C, 80º C temperature rise

2.2 EQUIPMENT IDENTIFICATION

.1 Provide equipment identification in accordance with Technical Specification 26 05 00 Common Work Results for Electrical.

.2 Label size: 7.

.3 Nameplate shall include equipment name, transformer kVA, primary and secondary voltage, upstream distribution panel and circuit.

.1 Confirm nameplate wording with Consultant prior to manufacture.

Part 3 Execution

3.0 INSTALLATION

.1 Mount dry type transformer as indicated in Contract Drawings.

.2 Ensure adequate clearance around transformer for ventilation.

.3 Install transformers in level upright position.

.4 Remove shipping supports only after transformer is installed and just before putting into service.

.5 Loosen isolation pad bolts until no compression is visible.

.6 Make primary and secondary connections in accordance with manufacturer's wiring diagram.

.7 Energize transformers after installation is complete.

END SECTION

TABLE OF CONTENTS

Part 1 General 2
1.0 Documents 2
1.1 Scope 2
1.2 Related Technical Specifications 2
1.3 Regulatory Requirements 2
1.4 Shop Drawings and Submittals 2
1.5 Delivery, Storage and Handling 2
Part 2 Products 2
2.0 Meter Socket 2
2.1 Meter Enclosure 2
2.2 Metering Antenna 3
2.3 Equipment Identification 3
Part 3 Execution 3
3.0 Installation 3

Revision History

Rev. No.	Date	Description of Revisions	Prep. By	Rev. By
-	May 29, 2026	Issued for Tender	JB	MS

Part 1 General

1.0 DOCUMENTS

.1 This Technical Specification forms a part of the Contract Documents and is to be read, coordinated and implemented in conjunction with all other parts.

1.1 SCOPE

.1 Materials and installation of service equipment.

1.2 RELATED TECHNICAL SPECIFICATIONS

.1 Technical Specification 26 05 00 Common Work Results – Electrical

.2 Technical Specification 26 05 28 Grounding - Secondary

1.3 REGULATORY REQUIREMENTS

.1 BC Hydro

.1 Refer to BC Hydro Requirements for Secondary Voltage Revenue Metering (https://www.bchydro.com/content/dam/BCHydro/customer-portal/documents/distribution/standards/ds-rmr-secondary-voltage-750v-and-less.pdf)

1.4 SHOP DRAWINGS AND SUBMITTALS

.1 Submit in accordance with Section 26 05 00 Common Work Results – Electrical.

1.5 DELIVERY, STORAGE AND HANDLING

.1 Deliver, store and handle materials in accordance with Technical Specification 26 05 00 Common Work Results – Electrical.

Part 2 Products

2.0 METER SOCKET

.1 Ratings as indicated in Contract Drawings.

.2 Supplied with screw type ring.

2.1 METER ENCLOSURE

.1 Rating: CSA Type 3R

.2 Construction:

.1 Material: stainless steel

.2 Flip-up pad lockable cover

.3 Pole bracket designed for bolt or band-on installation

.4 Suitable for overhead or underground service

.3 Viewing Window: As required when indicated on Contract Drawings.

.1 Material: 1/2 inch thick lexan.

.4 Mount: As indicated on Contract Drawings.

2.2 METERING ANTENNA

.1 Include provision for exterior antenna per BC Hydro standards.

2.3 EQUIPMENT IDENTIFICATION

.1 Provide equipment identification in accordance with Technical Specification 26 05 00 - Common Work Results for Electrical.

.2 Label size: 2.

.3 Nameplate shall include equipment name, voltage, and phase.

.1 Confirm nameplate wording with Contract Administrator prior to manufacture.

Part 3 Execution

3.0 INSTALLATION

.1 Install service equipment as indicated on Contract Drawings.

.2 Connect to incoming service.

.3 Connect to outgoing load circuits.

.4 Make grounding connections in accordance with Technical Specification 26 05 28 Grounding - Secondary

.5 Make provision for BC Hydro's metering.

.6 Allow for BC Hydro coordination, supply, and delivery of materials.

END SECTION

Table of Contents

Part 1 General 2
1.0 Documents 2
1.1 Scope 2
1.2 Related Sections 2
1.3 Regulatory Requirements 2
1.4 Shop Drawings and Submittals 2
1.5 Delivery, Storage and Handling 2
Part 2 Products 2
2.0 Service Entrance and Distribution Board 2
2.1 Main Circuit Breaker 3
2.2 Equipment Identification 3
Part 3 Execution 4
3.0 Installation 4

Revision History

Rev. No.	Date	Description of Revisions	Prep. By	Rev. By
-	May 29, 2026	Issued for Tender	JB	MS

Part 1 General

1.0 DOCUMENTS

.1 This Technical Specification forms a part of the Contract Documents and is to be read, coordinated and implemented in conjunction with all other parts.

1.1 SCOPE

.1 Materials and installation of the service entrance board.

1.2 RELATED SECTIONS

.1 Technical Specification 26 05 00 Common Work Results – Electrical

.2 Technical Specification 26 05 02 Seismic Restraint

.3 Technical Specification 26 24 01 Service Equipment

.4 Technical Specification 26 28 23 Disconnect Switches

.5 Technical Specification 26 28 16 02 Molded Case Circuit Breakers

1.3 REGULATORY REQUIREMENTS

.1 BC Hydro

.1 Refer to BC Hydro Requirements for Secondary Voltage Revenue Metering (https://www.bchydro.com/content/dam/BCHydro/customer-portal/documents/distribution/standards/ds-rmr-secondary-voltage-750v-and-less.pdf)

.2 Distribution Standards: Underground Electrical: ES53

1.4 SHOP DRAWINGS AND SUBMITTALS

.1 Submit in accordance with Technical Specification 26 05 00 Common Work Results – Electrical.

1.5 DELIVERY, STORAGE AND HANDLING

.1 Deliver, store and handle materials in accordance with Technical Specification 26 05 00 Common Work Results – Electrical.

Part 2 Products

2.0 SERVICE ENTRANCE AND DISTRIBUTION BOARD

.1 Rating: As indicated on Contract Drawings.

.1 L-Box per BC Hydro standards.

.2 Horizontal bus assembly.

.3 Cable clamp assembly.

.4 Grounding assembly.

.5 Identify phases with colour coding.

.2 Cable pull section:

.1 Refer to BC Hydro metering to the Requirements for Secondary Voltage Revenue Metering (http://www.bchydro.com/ext/metering/).

.2 Refer to BC Hydro Distribution Standards: Underground Electrical: ES53.

.3 Each bus to have lugs to accept service conductors.

2.1 MAIN CIRCUIT BREAKER

.1 Solid State Electronic Trip Breaker as indicated on Contract Drawings.

.2 Common-trip breaker: with single handle for multi-pole applications.

.3 Moulded case circuit breaker to operate by means of solid-state trip unit with associated current monitors and self-powered shunt trip to provide inverse time current trip under overload condition, and long-time/short time/instantaneous tripping for short circuit protection.

.4 Programmable electronic solid state trip unit with separately adjustable long time, short time, and instantaneous settings.

.5 Circuit breaker with interchangeable trips as indicated.

.6 Minimum symmetrical RMS interrupting capacity rating: As indicated on Contract Drawings.

.7 Provide NEMA 1 enclosures for breakers where indicated.

2.2 EQUIPMENT IDENTIFICATION

.1 Provide equipment identification in accordance with Technical Specification 26 05 00 - Common Work Results for Electrical.

.2 Label size: 2.

.3 Nameplate shall include equipment name, voltage, and phase.

.1 Confirm nameplate wording with Contract Administrator prior to manufacture.

Part 3 Execution

3.0 INSTALLATION

.1 Locate service entrance board and fasten to kiosk wall.

.2 Install seismic restraint for all equipment. See Technical Specification 26 05 02 – Seismic Restraint.

.3 BC Hydro metering to be installed as indicated on Contract Drawings per Requirements for Secondary Voltage Revenue Metering.

.4 Connect main service to line terminals of main bus in pull section.

.5 Connect load terminals of distribution breakers to feeders.

.6 Check factory made connections for mechanical security and electrical continuity.

.7 Run one grounding conductor bare copper sized per the Contract Drawings from neutral bus to ground bus to main ground.

.8 Check trip unit settings against co-ordination study to ensure proper working and protection of components.

END SECTION

TABLE OF CONTENTS

Part 1 General 2
1.0 Documents 2
1.1 Scope 2
1.2 Related Technical Specification 2
1.3 Regulatory Requirements 2
1.4 Shop Drawings and Submittals 2
1.5 Delivery, Storage and Handling 2
Part 2 Products 2
2.0 Surge Protection Device 2
2.1 Equipment Identification 3
Part 3 Execution 3
3.0 Installation 3

Revision History

Rev. No.	Date	Description of Revisions	Prep. By	Rev. By
-	May 29, 2026	Issued for Tender	JB	MS

Part 1 General

1.0 DOCUMENTS

.1 This Technical Specification forms a part of the Contract Documents and is to be read, coordinated and implemented in conjunction with all other parts.

1.1 SCOPE

.1 Materials and installation of transient voltage surge suppression (i.e. surge protection device).

1.2 RELATED TECHNICAL SPECIFICATION

.1 Technical Specification 26 05 00 Common Work Results – Electrical

1.3 REGULATORY REQUIREMENTS

.1 Canadian Standards Association (CSA International)

.1 CSA C22.1, Canadian Electrical Code, Part 1, Current Edition.

1.4 SHOP DRAWINGS AND SUBMITTALS

.1 Submit in accordance with Technical Specification 26 05 00 Common Work Results – Electrical.

1.5 DELIVERY, STORAGE AND HANDLING

.1 Deliver, store and handle materials in accordance with Technical Specification 26 05 00 Common Work Results – Electrical.

Part 2 Products

2.0 SURGE PROTECTION DEVICE

.1 Provide for transient voltage surge suppression as indicated on Contract Drawings.

.2 Short Circuit Current Ratings: 200kA

.3 Surge Capacity Rating:

.1 Service Entrance (347/600V) – 200kA per Phase (min.)

.2 Service Entrance (120/208V) – 100kA per phase (min.)

.3 Service Entrance (120/240V) – 50kA per phase (min.)

.4 One (1) form C (NO/NC) dry relay alarm output contacts.

.5 Direct bus mounted.

.6 Standard of acceptance: Must be same manufacturer as panelboard.

2.1 EQUIPMENT IDENTIFICATION

.1 Provide equipment identification in accordance with Technical Specification 26 05 00 Common Work Results for Electrical.

.2 Label size: 2.

.3 Nameplate shall include equipment name, voltage, and phase.

.1 Confirm nameplate wording with Contract Administrator prior to manufacture.

Part 3 Execution

3.0 INSTALLATION

.1 Surge protection device integral to panelboard.

.2 Install conductors between suppressor and point of attachment to service equipment sized in accordance with manufacturer's shop drawings and keep conductor lengths as short as possible, not to exceed 600 mm. Provide information from manufacturers who offer an integrated surge protection device in the main service entrance equipment clearly showing lead lengths, including the neutral and ground connections.

.3 Grounding: bond suppressor ground to the equipment grounding conductor and service entrance ground.

END SECTION

TABLE OF CONTENTS

Part 1 General 2
1.0 Documents 2
1.1 Scope 2
1.2 Related Technical Specifications 2
1.3 Regulatory Requirements 2
1.4 Shop Drawings and Submittals 2
1.5 Delivery, Storage and Handling 2
Part 2 Products 2
2.0 Panelboards 2
2.1 Breakers 3
2.2 Equipment Identification 3
Part 3 Execution 4
3.0 Installation 4

Revision History

Rev. No.	Date	Description of Revisions	Prep. By	Rev. By
-	May 29, 2026	Issued for Tender	JB	MS

Part 1 General

1.0 DOCUMENTS

.1 This Technical Specification forms a part of the Contract Documents and is to be read, coordinated, and implemented in conjunction with all other parts.

1.1 SCOPE

.1 Materials and installation of panelboards and circuit breakers.

1.2 RELATED TECHNICAL SPECIFICATIONS

.1 Technical Specification 26 05 00 Common Work Results – Electrical

.2 Technical Specification 26 28 16 02 Molded Case Circuit Breakers

1.3 REGULATORY REQUIREMENTS

.1 Canadian Standards Association (CSA International)

.1 CSA C22.2 No. 29-11, Panelboards and enclosed Panelboards.

1.4 SHOP DRAWINGS AND SUBMITTALS

.1 Submit in accordance with Technical Specification 26 05 00 Common Work Results – Electrical.

1.5 DELIVERY, STORAGE AND HANDLING

.1 Deliver, store and handle materials in accordance with Technical Specification 26 05 00 Common Work Results – Electrical.

Part 2 Products

2.0 PANELBOARDS

.1 Panelboards based on CSA C22.2 No. 29.

.2 Product of one manufacturer.

.1 Install circuit breakers in panelboards before shipment.

.2 In addition to CSA requirements manufacturer's nameplate must show fault current that panel including breakers has been built to withstand.

.3 Bus and breakers rated as indicated on the Contract Drawings. Symmetrical interrupting capacity as indicated on Contract Drawings but not less than 10kA.

.4 Sequence phase bussing with odd numbered breakers on the left and even numbered breakers on the right, with each breaker identified by permanent number identification as to circuit number and phase.

.5 Panelboards: mains, number of circuits, and number and size of branch circuit breakers as indicated.

.6 Minimum of 2 flush locks for each panelboard.

.7 Two keys for each panelboard and key panelboards alike.

.8 Copper bus with neutral of same ampere rating as mains.

.9 Mains: suitable for bolt-on breakers.

.10 Trim with concealed front bolts and hinges.

.11 Trim and door finish: baked grey enamel.

.12 Isolated ground bus.

.13 Include grounding busbar with 3 of terminals for bonding conductor equal to breaker capacity of the panel board.

.14 Provide minimum additional space for future breakers in panelboards as follows:

.1 Panelboards 120/208V, up to 225A: minimum 10% space and 10% spare 15A breakers or as noted on the Contract Drawings

.2 Distribution boards greater than 208V: minimum 20% or as noted on the Contract Drawings

2.1 BREAKERS

.1 Breakers: in accordance with Technical Specification 26 28 16 02 Molded Case Circuit Breakers.

.2 Breakers with thermal and magnetic tripping in panelboards except as indicated otherwise.

.3 Main breaker (where applicable): separately mounted on top or bottom of panel to suit cable entry. When mounted vertically, down position should open breaker.

2.2 EQUIPMENT IDENTIFICATION

.1 Provide equipment identification in accordance with Technical Specification 26 05 00 Common Work Results for Electrical.

.2 Label size: 2.

.3 Nameplate shall include equipment name, voltage, and phase.

.1 Confirm nameplate wording with Contract Administrator prior to manufacture.

.4 Complete circuit directory with typewritten legend showing location and load of each circuit.

Part 3 Execution

3.0 INSTALLATION

.1 Locate panelboards as indicated and mount securely, plumb, true and square, to adjoining surfaces.

.2 Mount panelboards to height specified in Technical Specification 26 05 00 Common Work Results – Electrical or as indicated on Contract Drawings.

.3 Connect loads to circuits.

.4 Connect neutral conductors to common neutral bus.

END SECTION

TABLE OF CONTENTS

Part 1 General 2
1.0 Documents 2
1.1 Scope 2
1.2 Related Technical Specifications 2
1.3 Regulatory Requirements 2
1.4 Shop Drawings and Submittals 2
1.5 Delivery, Storage and Handling 2
Part 2 Products 3
2.0 Controls Cabinet 3
2.1 VFD Cabinet 4
2.2 Control and VFD Cabinet Components 5
2.3 Electrical Kiosk 7
Part 3 Execution 13
3.0 Installation 13
3.1 Controls 13
3.2 Maintenance Materials 13
3.3 Field Quality Control 14

Revision History

Rev. No.	Date	Description of Revisions	Prep. By	Rev. By
-	May 29, 2026	Issued for Tender	JB	MS

Part 1 General

1.0 DOCUMENTS

.1 This Technical Specification forms a part of the Contract Documents and is to be read, coordinated and implemented in conjunction with all other parts.

1.1 SCOPE

.1 Materials and installation for equipment and components housed in cabinets and enclosures.

1.2 RELATED TECHNICAL SPECIFICATIONS

.1 Technical Specification 26 05 00 Common Work Results – Electrical

.2 Technical Specification 26 05 10 Testing and Commissioning

.3 Technical Specification 26 05 31 Splitters, Junction, Pull Boxes and Cabinets

.4 Technical Specification 26 28 16 02 Molded Case Circuit Breakers

.5 Technical Specification 26 28 23 Disconnect Switches

.6 Technical Specification 26 29 03 Control Devices

.7 Technical Specification 26 50 00 Lighting

1.3 REGULATORY REQUIREMENTS

.1 Canadian Standards Association (CSA International)

.1 CSA C22.1, Canadian Electrical Code, Part 1, Current Edition.

.2 C22.2 No. 94.1-15 - Enclosures for electrical equipment, non-environmental considerations

.3 C22.2 No. 94.2-15 - Enclosures for electrical equipment, environmental considerations.

.2 National Electrical Manufacturers Association (NEMA)

.1 NEMA 250-2008, Enclosures for Electrical Equipment (1000 Volts Maximum).

1.4 SHOP DRAWINGS AND SUBMITTALS

.1 Submit in accordance with Technical Specification 26 05 00 Common Work Results – Electrical.

1.5 DELIVERY, STORAGE AND HANDLING

.1 Deliver, store and handle materials in accordance with Technical Specification 26 05 00 Common Work Results – Electrical.

Part 2 Products

2.0 CONTROLS CABINET

.1 Application:

.1 House electrical equipment within electrical kiosks providing a degree of protection from falling dirt, dust, oil, and water.

.2 House electrical equipment at remote monitoring sites providing a degree of protection against ingress of water.

.2 Construction:

.1 Outdoor enclosures shall be fabricated from marine grade aluminum. Steel enclosures are acceptable for indoor areas.

.2 Enclosures shall be rigid, wall or pole mounted. Outdoor enclosures shall be rated NEMA 3R. NEMA 1 is acceptable for indoor enclosures.

.3 Smooth, continuously welded seams without knockouts, cutouts, or holes.

.4 Welded brackets for enclosure mounting.

.5 Formed lip on door and enclosure to prevent ingress of flowing liquids and contaminants.

.6 Continuously hinged door with provision for removal by pulling hinge pin.

.7 Door secured with multi-point latch system including provision for padlocking.

.8 Permanently secured continuous gasket around door.

.9 Removable inner back and side panels, as required.

.10 Bonding studs on door, enclosure, and panels.

.11 Grounding and Bonding lugs, as required.

.12 Literature pocket located on inside of door.

.13 Heating and ventilation per the Contract Drawings.

.14 Kiosk must be sealed to the concrete pad using a closed cell, neoprene gasket.

.15 All electrical cabinets and enclosures must be labeled with voltage and amperage designation pertinent to encapsulated electrical equipment.

.3 Finish:

.1 Door and enclosure shall be finished in recoatable smooth ANSI 61 gray powder coating inside and out.

.2 Inner panels shall be finished with white powder coating.

.4 Enclosure dimensions on Contract Drawings are approximate only. Contractor to determine final enclosure dimensions to layout all of proposed equipment.

.5 Control panel shall include provision for 20 percent future expansion.

.6 All enclosure assemblies shall be from the same manufacturer, shall bear the CSA seal of approval, or other certification mark acceptable in the Province of British Columbia, and be manufactured by an electrical control panel manufacturer regularly engaged in this type of work.

.7 Shop Drawings for the electrical enclosures are to be submitted in accordance with Technical Specification 26 05 00 Common Work Results - Electrical.

.8 Standard of Acceptance: Hammond Manufacturing EN4SD483010GY or approved equivalent.

2.1 VFD CABINET

.1 Line Power: 600V, 60Hz, 3-phase, unless otherwise indicated on Contract Drawings.

.2 Modified to suit the components in Technical Specification 26 29 03 Control Devices and Technical Specification 26 29 23 11 Variable Frequency Drive.

.3 Application:

.1 House electrical equipment within electrical kiosks providing a degree of protection from falling dirt, dust, oil, and water.

.2 House electrical equipment at remote monitoring sites providing a degree of protection against ingress of water.

.4 Construction:

.1 Outdoor enclosures shall be fabricated from marine grade aluminum. Steel enclosures are acceptable for indoor areas.

.2 Enclosures shall be rigid, wall or pole mounted. Outdoor enclosures shall be rated NEMA 3R. NEMA 1 is acceptable for indoor enclosures.

.3 Smooth, continuously welded seams without knockouts, cutouts, or holes.

.4 Welded brackets for enclosure mounting.

.5 Formed lip on door and enclosure to prevent ingress of flowing liquids and contaminants.

.6 Continuously hinged door with provision for removal by pulling hinge pin.

.7 Door secured with multi-point latch system including provision for padlocking.

.8 Permanently secured continuous gasket around door.

.9 Removable inner back and side panels, as required.

.10 Bonding studs on door, enclosure, and panels.

.11 Grounding and Bonding lugs, as required. VFD grounding completed as specified by the manufacturer.

.12 Literature pocket located on inside of door.

.13 Heating and ventilation per the Contract Drawings.

.14 All electrical cabinets and enclosures must be labeled with voltage and amperage designation pertinent to encapsulated electrical equipment.

.5 Finish:

.1 Door and enclosure shall be finished in recoatable smooth ANSI 61 gray powder coating inside and out.

.2 Inner panels shall be finished with white powder coating.

.6 Enclosure dimensions on Contract Drawings are approximate only. Contractor to determine final enclosure dimensions to layout all proposed equipment.

.7 Control panel shall include provision for 20 percent future expansion.

.8 All enclosure assemblies shall be from the same manufacturer, shall bear the CSA seal of approval, or other certification mark acceptable in the Province of British Columbia, and be manufactured by an electrical control panel manufacturer regularly engaged in this type of work.

.9 Shop Drawings for the electrical enclosures are to be submitted in accordance with Technical Specification 26 05 00 Common Work Results - Electrical.

2.2 CONTROL AND VFD CABINET COMPONENTS

.1 VFD Specific Cabinet Components:

.1 Refer to Technical Specification 26 29 23 11 Variable Frequency Drive.

.2 Selector Switches:

.1 Refer to Technical Specification 26 29 03 Control Devices.

.3 Indicators/Pilot Lights:

.1 Refer to Technical Specification 26 29 03 Control Devices.

.4 Push buttons:

.1 Refer to Technical Specification 26 29 03 Control Devices

.5 HMI:

.1 Refer to Technical Specification 26 27 17 Programmable Logic Control.

.6 Ethernet Bulkhead Receptacle:

.1 Refer to Technical Specification 26 27 26 Wiring Devices.

.7 Network switch:

.1 Refer to Technical Specification 26 29 05 Data Communications Infrastructure.

.8 PLC/RTU Equipment:

.1 Refer to Technical Specification 26 27 17 Programmable Logic Controller.

.9 Interposing Relays:

.1 Refer to Technical Specification 26 29 03 Control Devices.

.10 Intrinsically Safe Relays:

.1 Refer to Technical Specification 26 29 03 Control Devices.

.11 Intrinsically Safe Barriers:

.1 Refer to Technical Specification 26 29 03 Control Devices.

.12 24VDC Power Supply and Diode Module

.1 Technical Specification 26 29 03 Control Devices.

.13 UPS

.1 Refer to Technical Specification 26 33 53 Static Uninterruptible Power Supply.

.14 Circuit Breakers

.1 Refer to Technical Specification 26 27 16 02 Molded Case Circuit Breakers.

.15 Terminals and Interconnect Wiring:

.1 In accordance with Technical Specification 26 05 00 Common Work Results - Electrical.

.2 DIN rail mounted terminals complete with dividers and end stops as required. Provide 10 spare terminals on each section and additional spare terminals as noted on the Contract Drawings.

.3 Utilize plastic finger wiring ducts for organization of all interior and field wiring. Ducts are to be filled to no more than 50% of capacity.

.4 Use ferrules at termination points on stranded wires.

.5 A space of 200 mm must be kept clear for field wiring. All wiring labels must be clearly visible at completion.

2.3 ELECTRICAL KIOSK

.1 Electrical Kiosk shall be rigid, free-standing, vandal resistant kiosk, rated CSA Type 3R and certified to CAN/CSA C22.2 No. 94.1-15 and CAN/CSA C22.2 No. 94.2-15.

.2 Kiosk dimensions on Contract Drawings are approximate only. Contractor to determine final kiosk dimensions to layout all of proposed equipment.

.3 All kiosk assemblies shall be from the same manufacturer, shall bear the CSA seal of approval, or other certification mark acceptable in the Province of British Columbia, and be manufactured by an electrical control panel manufacturer regularly engaged in this type of work.

.4 General Material Requirements:

.1 All materials shall be new.

.2 Equipment shall be fabricated from marine grade 5052-H32 sheet aluminum of a least 3.2 mm (1/8 in.) thickness.

.3 Use stainless steel hardware, unless otherwise noted.

.5 Connecting Hardware:

.1 Miscellaneous hardware other than screws, nuts, bolts and washers shall be stainless steel.

.2 Connecting hardware (i.e. screws, nuts, bolts and washers) 3/8” diameter or smaller and shall conform to the following:

.1 All hardware shall have unified national thread form (ANSI) and shall be stainless steel.

.2 All nuts and bolts 1/4-20 and large shall have unified national threads and hexagon heads, and shall bear suitable markings to identify their grade and origin of manufacture.

.3 All machine screws smaller than 1/4-20 (ex. 8-32 UNC, 10-24 UNC) shall be Robertson pan-head. All screw heads shall be sized so only one screwdriver is required when working on the panels.

.4 No sheet metal or self-tapping screws shall be used.

.5 No pressure adhesive cable ties shall be used where equipment and/or wiring is to be mounted to the inside of the control enclosure doors, a 3.2mm powder coated aluminum stand-off liner shall be welded to the inside of the door to facilitate the use of fasteners.

.6 Fabrication Mechanical Requirements

.1 The kiosk shall be fabricated with sufficient bracing to form a structure capable of withstanding transportation, wind, snow and ice loading. The kiosk manufacturer is responsible for obtaining certification from EGBC registered professional engineer.

.2 Recommended anchor locations shall be provided on Shop Drawings.

.3 Anchor requirements shall be provided based on wind, snow and seismic loading criteria for the geographic location of the installation.

.4 Importance factor of one (1) shall be considered for the installation.

.1 All exterior corners shall be rounded to a radius of 3.17mm (1/8 inch) minimum.

.2 All sharp edges shall be de-burred to a radius of 0.4mm (1/64 inch) minimum in order to reduce hazards to service personnel.

.5 Welding:

.1 All welds shall be in accordance with CAN/CSA W59.2 – Welded Aluminum Construction.

.2 All welding to be performed by Canadian Welding Bureau certified welders.

.3 The Supplier shall have suitable credentials to weld aluminum and shall adhere to all applicable ANSI standards. Project references shall be made available upon request.

.4 All exterior seams shall be of continuously welded construction. Exterior seams shall not be visible. All exterior welds shall be ground smooth.

.5 All welds shall be free of slag and spatter.

.6 Roof:

.1 The roof shall have a minimum 75 mm overhang with continuous rain gutters.

.2 Lifting eyes shall be secured to the frame or the kiosk on reinforced material and be removable after installation.

.7 Doors:

.1 Doors shall have internal bracing when required to prevent excessive distortion.

.2 Doors shall be at least 100mm above concrete pad.

.3 All kiosk doors are to be lockable. The latches must contain minimum 13 mm diameter hole to receive padlock. Door handles must contain provision for double padlock capability.

.4 All double doors to be overlapping with no center mullion.

.5 The door handle shall be galvanized steel and powder coated the same colour as the kiosk. Latch handle shall swing towards hinge side of door.

.6 Doors shall have three-point latching devices with vertical bars that are riveted to actuator bar.

.7 Handles, latches, and padlocks shall be installed recessed in a pocket such that they cannot be struck off or cut with a standard hacksaw.

.8 Handle shall not protrude from recessed pocket during operation.

.9 Door hardware to be mounted with tamper resistant hardware.

.10 Each door shall have a hydraulic dampener to hold the door in the open position at 90 degrees.

.11 Hinges shall be hidden and not accessible from the outside with the door closed. Hinge body to be aluminum with stainless steel hinge pin. Hinges to be of permanently lubricated design.

.8 Door Gaskets:

.1 The gasket shall be of one continuous piece per side (ex. four strips per opening) and shall be permanently bonded to the metal.

.2 The gasket shall be of an appropriate length so as not to have gaps at gasket joints or to shrink over time.

.3 The surface of the gasket shall be covered with a silicon lubricant to prevent sticking to the mating surface.

.4 The hinge shall be designed to prevent binding of the gasket. Hinge. Standard of acceptance: Marr Weld-On Hinge Limited Model #AFSSP-10GF or approved equivalent.

.9 Plan Pouch and Laptop Shelf

.1 Kiosk shall include a waterproof plan pouch (400mm high x 300mm wide minimum) on inside of door in the controls compartment. The pouch shall be secured using stainless steel fasteners.

.2 Kiosk shall include fold down door-mounted equipment/laptop shelf in the controls compartment. Shelf shall be mounted such that top of shelf is located 1100mm (36”) above the top of finished grade.

.7 Kiosk Finish

.1 General Requirements:

.1 The powder coating process shall be tested on at least one piece from a given batch of aluminum components to ensure a high-quality coating for that type of component before the complete batch is powder coated. If there is uncertainty about the quality or appearance of the powder coating, the Contractor shall obtain the Owner’s approval on the powder coating.

.2 Items to be powder coated shall be free of dents, scratches, weld burns, ripples, pits, and abrasion before powder coating.

.3 Removable components which may be damaged by the powder coating process shall be removed before powder coating and reassembled after powder coating.

.4 Mask all threaded hardware and tapped holes, as required.

.2 Pre-Treatment:

.1 The powder coating pre-treatment shall include the following steps in sequential order:

.1 Alkaline cleaning, or equivalent as required, to remove process oil, grease, and dirt.

.2 Rinsing, as required.

.3 Multi-metal iron phosphate coating or dried in place pre-treatment to increase corrosion resistance and improve paint adhesion. Follow chemical supplier’s specifications. Chemical concentration, temperature, and timing specifications must be followed precisely.

.4 Rinsing, as required.

.5 Non-chrome, or equivalent, sealing coating to provide additional corrosion protection. Follow chemical supplier's specifications. Chemical concentration, temperature, and timing specifications must be followed precisely.

.3 Drying / Pre-Heating:

.1 All items to be powder coated must be completely dry and pre-heated as required to help prevent out-gassing before powder coat application.

.4 Application:

.1 Powder coat shall be of type Polyester-TGIC.

.2 Powder coat colour: ANSI 61 gray.

.3 For porous castings, a powder coat type shall be selected to help prevent out-gassing.

.4 Powder coat must be applied to meet the powder coat manufacturer's specifications.

.5 Powder coat thickness shall be applied to a total 2.5-3.5 mils thickness.

.6 Full coverage of interior and exterior surfaces is required, with no light spots allowed on exterior surfaces.

.5 Final Appearance:

.1 All powder coatings shall be smooth, substantially free of contamination, flow lines, light spots, powder build-up, powder washout, streaks, sagging, runs, blisters, and other defects that would in any way impair serviceability or detract from the general appearance.

.2 The final product shall be free of thickness variations, poor adhesion, orange peel, blistering, pinholes, craters, powder puffs, drips, colour variations, clouding or grainy/wavy flow, dents, scratches, weld burns and abrasions harmful to its strength and general appearance.

.3 Contractor shall supply and install shrink-wrapped image around all sides of electrical kiosk. Owner to provide image during shop drawing review process.

.8 Equipment Mounting Panels:

.1 The kiosk shall be provided with full height inside mounting panels.

.2 Panels shall be minimum 12-gauge galvanized steel painted white.

.3 Panels shall be removable and suitable for drilling and tapping in order to mount internal components.

.9 Kiosk Environmental Requirements

.1 General:

.1 Provide sufficient airflow to keep equipment temperature to below its maximum temperature rating to prevent overheating of the equipment under all prevailing temperature conditions for the area in which it will be installed.

.2 Provide positive pressure ventilation to ensure that dust does not enter the cabinets.

.2 Insulation:

.1 The Supplier shall insulate all sides, doors, and roof of the kiosk.

.2 Insulation shall be 25mm Polyisocyanurate Insulation Sheathing. All edges and seams to be sealed with foil tape.

.3 The insulation shall have a minimum R-rating of 4.5.

.4 On doors, insulation shall be concealed by full height 20 gauge aluminum plates.

.5 On sides and roof, insulation shall be located between outer shell and mounting panels.

.3 Ventilation:

.1 Refer to Technical Specification 26 54 00 Heaters and Ventilation.

.4 Kiosk Heating:

.1 Refer to Technical Specification 26 54 00 Heaters and Ventilation.

.5 Thermostat:

.1 Refer to Technical Specification 26 54 00 Heaters and Ventilation.

.10 Kiosk Lighting:

.1 Kiosk lights shall be LED in accordance with the requirements under Technical Specification 26 50 00 Lighting.

.2 Provide door switch in accordance with Technical Specification 26 27 26 Wiring Devices.

.11 Conduit and Wiring:

.1 Wiring between components within the kiosk shall be in EMT.

.2 Conduit to be in accordance with the requirements under Technical Specification 26 05 34 Conduits, Conduit Fastenings and Conduit Fittings.

.3 Wiring to be in accordance with the requirements under Technical Specification 26 05 21 Wires and Cables (0-1000V)

.12 Electrical Assemblies:

.1 Equipment within the kiosk shall be within enclosures in accordance with the requirements under Technical Specification 26 05 31 Splitters, Junction, Pull Boxes and Cabinets.

.2 Enclosures shall be gray powder coat finish inside and out over pretreated surfaces.

.3 Additional equipment are listed in the Contract Drawings and in the electrical Technical Specifications.

Part 3 Execution

3.0 INSTALLATION

.1 Install cabinets as indicated in the Contract Drawings.

.2 Apply touch up paint as required.

.3 Make field power and control connections as indicated.

.4 Compliance: Comply with manufacturer's written data, including product technical bulletins, product catalogue installation instructions, product carton installation instructions, and datasheet.

.5 Supply all necessary equipment and wiring to provide the points connected to the equipment as indicated on the Contract Drawings.

.6 Assemble the control cabinets and VFD cabinets to include the components identified within the Contract Documents and indicated on the Contract Drawings.

.7 Supply, install, and connect external sensors and components as shown on the Contract Drawings.

.8 Contractor to install radio and ancillary equipment including, but limited to, antenna and coax cabling. Contractor to coordinate radio configuration and antenna aiming with Owner where indicated on the Contract Drawings.

3.1 CONTROLS

.1 Refer to process narrative for programming requirements.

3.2 MAINTENANCE MATERIALS

.1 Provide:

.1 Ten (10) spare fuses of each type used in the panel, as required.

.2 One (1) control relay of each type used in the control panel.

.3 Any other components which the Contractor recommends to be kept as spares.

3.3 FIELD QUALITY CONTROL

.1 Perform tests in accordance with Technical Specification 26 05 00 Common Work Results – Electrical.

.2 Ensure moving and working parts are lubricated where required.

.3 Operate system to prove satisfactory performance of complete system during 24 hour period.

END SECTION

TABLE OF CONTENTS

Part 1 General 2
1.0 Documents 2
1.1 Scope 2
1.2 Related Technical Specifications 2
1.3 Regulatory Requirements 2
1.4 Shop Drawings and Submittals 2
1.5 Delivery, Storage and Handling 2
Part 2 Products 2
2.0 Function 2
2.1 HMI equipment 3
2.2 PLC Equipment 3
2.3 PLC Control Panel 4
2.4 Wiring 4
2.5 Grounding and Bonding 5
2.6 Programming 5
Part 3 Execution 5
3.0 Installation 5
3.1 Field Quality Control 5
3.2 Commissioning 6

Revision History

Rev. No.	Date	Description of Revisions	Prep. By	Rev. By
-	May 29, 2026	Issued for Tender	JB	MS

Part 1 General

1.0 DOCUMENTS

.1 This Technical Specification forms a part of the Contract Documents and is to be read, coordinated and implemented in conjunction with all other parts.

1.1 SCOPE

.1 Materials and installation of programmable logic controllers (PLC) and operator stations.

1.2 RELATED TECHNICAL SPECIFICATIONS

.1 Technical Specification 26 05 00 Common Work Results – Electrical

.2 Technical Specification 26 27 16 Electrical Cabinets and Enclosures

1.3 REGULATORY REQUIREMENTS

.1 Canadian Standards Association (CSA International)

.1 CSA C22.1, Canadian Electrical Code, Part 1, Current Edition.

1.4 SHOP DRAWINGS AND SUBMITTALS

.1 Submit in accordance with Technical Specification 26 05 00 Common Work Results – Electrical.

1.5 DELIVERY, STORAGE AND HANDLING

.1 Deliver, store and handle materials in accordance with Technical Specification 26 05 00 Common Work Results – Electrical.

Part 2 Products

2.0 FUNCTION

.1 PLC systems to be control panel mounted, functional and operational as a stand-alone control system and be capable of integration with existing SCADA control system.

.2 Provide PLC arrangement as shown on the Contract Drawings. The PLC chassis should be provided with redundant power supplies c/w all required cables. The PLC chassis should house all required discrete and analog I/O cards and communication cards such as Ethernet communication module.

.3 The SCADA system will provide supervisory control of the equipment through the PLC. All PLC inputs and outputs (discrete and analog) shall be accessible to the SCADA system via Modbus TCP data link.

2.1 HMI EQUIPMENT

.1 Install HMI in accordance with the manufacturer's latest installation publication.

.2 HMI standard of acceptance: Emerson GE IC755CSS06RDA-AJ.

.1 Configure and wire HMI in accordance with the manufacturer's installation and programming manual.

2.2 PLC EQUIPMENT

.1 PLC: Emerson GE VersaMax PLC

.2 Digital input module: IC200MDL650

.1 32 Digital Inputs

.2 Voltage: 24VDC

.3 Digital input module: IC200MDL640

.1 16 Digital Input

.2 Voltage: 24VDC

.4 Digital output module: IC200MDL740

.1 32 Digital Outputs

.2 Voltage: 24VDC

.5 Analog Input Module: IC200ALG260

.1 8 Analog Inputs

.1 4-20mA

.6 Analog Output Module: IC200ALG320

.1 4 Analog Outputs

.1 4-20mA

.7 CPU: IC200CPUE05

.8 I/O Carrier: IC200CHS022

2.3 PLC CONTROL PANEL

.1 Provide PLC system control panel, including, but not limited to, the following:

.1 In electrical or control rooms, provide NEMA 12 (minimum) double or single door freestanding panel as required.

.2 In outdoor areas provide NEMA 4X double or single door freestanding panel as required. Provide sufficient ventilation so enclosure's temperature does not exceed 30 degrees C.

.3 PLC processor, PLC chassis, chassis power supplies, required discrete and analog I/O modules, communication modules, and all required cabling and PLC wiring systems.

.4 All 24VDC power supplies.

.5 Terminal blocks and circuit breakers.

.6 Two 150 mm copper ground buses.

.7 One duplex receptacle wired to a separate 5A circuit breaker tagged "Computer use only".

.8 Power line filter(s) with separate circuit breaker(s) to be fed from UPS (by others) wired separately to PLC power supply and operator station.

.2 Provide 15% spare terminals.

.3 All relays and contactors to be complete with suitably sized surge suppressors.

.4 Provide single pole circuit breakers (DIN 35 rail mounted) in the PLC control panel as indicated on Contract Drawings.

2.4 WIRING

.1 All wire and cable to meet requirements of Technical Specification 26 05 21 Wires and Cables (0-1000V).

.2 Use #16AWG conductors from I/O wiring arm to panel terminal blocks only: all field and equipment conductor sizing and wiring types to meet requirements detailed in Technical Specification 26 05 21 Wires and Cables (0-1000V)

.3 Wire all I/O card terminations to terminal blocks, whether used or spare.

2.5 GROUNDING AND BONDING

.1 Ground and Bond per Technical Specification 26 05 28 Grounding – Secondary.

2.6 PROGRAMMING

.1 The PLC Software to operate the pump station will be provided by the City's programming representative.

.2 The Contractor shall demonstrate end-to-end functionality of each PLC point to the field equipment to the Contract Administrator prior the software installation by the City's programming representative.

.3 The Contractor is responsible for commissioning the software.

.4 The Contractor shall supply all necessary equipment and wiring to provide the connections shown on the Contract Drawings.

Part 3 Execution

3.0 INSTALLATION

.1 Install PLC control panel with its PLC as per Technical Specification 26 05 00 Common Work Results – Electrical.

.2 Mount PLC components in control panels as per the Technical Specifications 26 27 16 Electrical Cabinets and Enclosures.

.3 Mount the PLC and HMI on the control panel at an ergonomically correct operating height.

3.1 FIELD QUALITY CONTROL

.1 Provide testing and commissioning in accordance with Technical Specification 26 05 10 Testing and Commissioning.

.2 Test all PLC I/O panel wiring connections, testing of all HMI screens and pushbutton functions, testing of all interlocks with equipment supplied by others, confirming the operation integrity of all network communications including the link and "failure relay".

.3 Test the system including a complete simulation of the process or equipment to be controlled and verification of interlocking and operator station controls and alarming.

3.2 COMMISSIONING

.1 Additional testing includes, but is not limited to, testing of all interlocks with equipment supplied by others, integrity of all communication links, and communication with the Owners SCADA System.

.1 Provide Owners PLC programming representative for a minimum of five days for witness testing and commissioning of complete packaged system with connection to control system.

END SECTION

TABLE OF CONTENTS

Part 1 General 2
1.0 Documents 2
1.1 Scope 2
1.2 Related Technical Specifications 2
1.3 Regulatory Requirements 2
1.4 Shop Drawings and Submittals 2
1.5 Delivery, Storage and Handling 2
Part 2 Products 2
2.0 Switches 3
2.1 Receptacles 3
2.2 Cover Plates 4
2.3 Equipment Identification 4
Part 3 Execution 4
3.0 Installation 4
3.1 Protection 5

Revision History

Rev. No.	Date	Description of Revisions	Prep. By	Rev. By
-	May 29, 2026	Issued for Tender	JB	MS

Part 1 General

1.0 DOCUMENTS

.1 This Technical Specification forms a part of the Contract Documents and is to be read, coordinated, and implemented in conjunction with all other parts.

1.1 SCOPE

.1 Switches, receptacles, wiring devices, cover plates and their installation.

1.2 RELATED TECHNICAL SPECIFICATIONS

.1 Technical Specification 26 05 00 Common Work Results – Electrical

1.3 REGULATORY REQUIREMENTS

.1 Canadian Standards Association (CSA International)

- .1 CSA C22.2 No. 42 10, General Use Receptacles, Attachment Plugs and Similar Devices.
- .2 CSA C22.2 No. 42.1 13, Cover Plates for Flush Mounted Wiring Devices (Bi national standard, with UL 514D).
- .3 CSA C22.2 No. 55 15, Special Use Switches.
- .4 CSA C22.2 No. 111 10, General Use Snap Switches (Bi national standard, with UL 20).
- .5 CSA-C22.2 No. 177-13, Clock-operated Switches
- .6 CSA-C22.2 No. 184-15, Solid-State Lighting Controls

1.4 SHOP DRAWINGS AND SUBMITTALS

.1 Submit in accordance with Technical Specification 26 05 00 Common Work Results – Electrical.

1.5 DELIVERY, STORAGE AND HANDLING

.1 Deliver, store and handle materials in accordance with Technical Specification 26 05 00 Common Work Results – Electrical.

Part 2 Products

2.0 SWITCHES

.1 15A, 120 V, single pole, specification grade switches to: CSA-C22.2 No. 55 and CSA-C22.2 No. 111.

.2 Manually-operated general purpose AC switches with following features:

.1 Terminal holes approved for No. 10 AWG wire.

.2 Silver alloy contacts.

.3 Urea or melamine moulding for parts subject to carbon tracking.

.4 Suitable for back and side wiring.

.5 White toggle.

.3 Toggle operated fully rated for tungsten filament, fluorescent, and LED lamps, and up to 80% of rated capacity of motor loads.

.4 Provide switches with occupancy sensors for control of interior lighting.

.5 Switches will be of one manufacturer throughout the Project.

2.1 RECEPTACLES

.1 Duplex and quadruplex receptacles, CSA type 5-15 R/20R as indicated, 125 V, 15/20 A as indicated, U ground, to: CSA-C22.2 No.42 with following features:

.1 White urea moulded housing.

.2 Suitable for No. 10 AWG for back and side wiring.

.3 Break-off links for use as split receptacles.

.4 Eight back wired entrances, four side wiring screws.

.5 Triple wipe contacts and riveted grounding contacts.

.2 Other receptacles with ampacity and voltage as indicated in Contract Drawings.

.3 Receptacles will be of one manufacturer throughout the Project.

.4 Ground fault interrupting capabilities as indicated in Contract Drawings.

.5 Ethernet Bulkhead Receptacle:

.1 Application: Feed-thru coupler

.2 Mounting: Jam nut panel mount

.3 Connector: Female RJ45

.4 Rating: IP67-weatherproof with attached cap.

2.2 COVER PLATES

.1 Cover plates for wiring devices to: CSA-C22.2 No. 42.

.2 Cover plates will be of one manufacturer throughout the Project.

.3 Stainless steel.

.4 Weatherproof RPVC cover plates for surface-mounted FS or FD Type boxes.

.5 Weatherproof clear, lockable, while-in-use cover plates for all GFI locations, as indicated in Contract Drawings.

2.3 EQUIPMENT IDENTIFICATION

.1 Provide equipment identification in accordance with Technical Specification 26 05 00 Common Work Results – Electrical.

.2 Install identification labels indicating circuit, voltage, and phase.

Part 3 Execution

3.0 INSTALLATION

.1 Switches:

.1 Install single throw switches with handle in "UP" position when switch closed.

.2 Install switches in gang type outlet box when more than one switch is required in one location.

.3 Mount toggle switches at height in accordance with Technical Specification 26 05 00 Common Work Results – Electrical or as indicated on the Contract Drawings.

.2 Receptacles:

.1 Install receptacles in gang type outlet box when more than one receptacle is required in one location.

.2 Mount receptacles at height in accordance with Technical Specification 26 05 00 Common Work Results – Electrical or as indicated on the Contract Drawings.

.3 Where split receptacle has one portion switched, mount vertically and switch upper portion.

.4 Install GFCI/GFI type receptacles as indicated on Contract Drawings.

.3 Cover plates:

.1 Install suitable common cover plates where wiring devices are grouped.

.2 Do not use cover plates meant for flush outlet boxes on surface-mounted boxes.

3.1 PROTECTION

.1 Protect installed products and components from damage during Construction.

.2 Protect stainless steel cover plate finish with paper or plastic film until painting and other work is finished.

.3 Repair damage to adjacent materials caused by wiring device installation.

END SECTION

TABLE OF CONTENTS

Part 1 General 2
1.0 Documents 2
1.1 Scope 2
1.2 Related Technical Specifications 2
1.3 Regulatory Requirements 2
1.4 Shop Drawings and Submittals 2
1.5 Delivery, Storage and Handling 2
Part 2 Products 2
2.0 Breakers General 2
2.1 Thermal Magnetic Breakers 3
2.2 Solid State Electronic Trip Breakers 3
2.3 Main Circuit Breaker 3
2.4 Enclosure 3
Part 3 Execution 4
3.0 Installation 4

Revision History

Rev. No.	Date	Description of Revisions	Prep. By	Rev. By
-	May 29, 2026	Issued for Tender	JB	MS

Part 1 General

1.0 DOCUMENTS

.1 This Technical Specification forms a part of the Contract Documents and is to be read, coordinated and implemented in conjunction with all other parts.

1.1 SCOPE

.1 Materials for molded-case circuit breakers.

1.2 RELATED TECHNICAL SPECIFICATIONS

.1 Technical Specification 26 05 00 – Common Work Results for Electrical.

.2 Technical Specification 26 24 02 – Service Entrance Board

.3 Technical Specification 26 27 16 – Electrical Cabinets and Enclosures

.4 Technical Specification 26 24 16 01 – Panelboard Breaker Type

1.3 REGULATORY REQUIREMENTS

.1 Canadian Standards Association (CSA International).

.1 CSA-C22.2 No. 5-16, Molded-Case Circuit Breakers, Molded-Case Switches and Circuit-Breaker Enclosures (Tri-national standard with UL 489 and NMX-J-266-ANCE).

1.4 SHOP DRAWINGS AND SUBMITTALS

.1 Submit documents to the Contract Administrator in accordance with Technical Specification 26 05 00 Common Work Results – Electrical.

.2 Submit trip unit datasheets and time-current characteristic curves for breakers to the Contract Administrator.

1.5 DELIVERY, STORAGE AND HANDLING

.1 Deliver, store and handle materials in accordance with Technical Specification 26 05 00 Common Work Results – Electrical.

Part 2 Products

2.0 BREAKERS GENERAL

.1 Molded case circuit breakers based on CSA C22.2 No. 5-16.

.2 Bolt-on molded case circuit breaker: quick-make, quick-break type, for manual and automatic operation with temperature compensation for 40 deg C ambient.

.3 Common-trip breakers: with single handle for multi-pole applications.

.4 Magnetic instantaneous trip elements in circuit breakers to operate only when value of current reaches setting.

.5 Circuit breakers in Panelboards to have minimum interrupting capacity ratings as indicated on the Contract Drawings.

2.1 THERMAL MAGNETIC BREAKERS

.1 Molded case circuit breaker to operate automatically by means of thermal and magnetic tripping devices to provide inverse time current tripping and instantaneous tripping for short circuit protection.

.2 Standard of Acceptance: Phoenix Contact TMC 81C or approved equivalent.

2.2 SOLID STATE ELECTRONIC TRIP BREAKERS

.1 Solid state electronic trip breakers as indicated on Contract Drawings.

.2 Common trip breakers: with single handle for multi pole applications.

.3 Molded case circuit breaker to operate by means of solid-state trip unit with associated current monitors and self-powered shunt trip to provide inverse time current trip under overload condition, and long-time/short time/instantaneous tripping for short circuit protection.

.4 Programmable electronic solid state trip unit with separately adjustable long time, short time, and instantaneous.

.5 Circuit Breakers to have auxiliary contact for PLC notification of breaker status (contact changes state when breaker is open), where indicated on Contract Drawings.

.6 Circuit breakers with interchangeable trips as indicated on Contract Drawings.

.7 Circuit breakers to have minimum interrupting capacity ratings as indicated on Contract Drawings.

.8 Refer to single line diagrams within Contract Drawings. System has been designed to achieve arc flash incident energy levels of less than 1.2 calories/cm2 for all points downstream of main utility circuit breaker. Provide circuit breakers as required to achieve same.

.9 Standard of Acceptance: Eaton with DigiTrip 310+ (LSI) trip device.

2.3 MAIN CIRCUIT BREAKER

.1 Main Circuit Breaker in accordance with Technical Specification 26 24 02 – Service Entrance Board.

2.4 ENCLOSURE

.1 Provide enclosures for breakers as specified in Technical Specification 26 05 31 Splitters, Junction, Pull Boxes and Cabinets.

Part 3 Execution

3.0 INSTALLATION

.1 Manufacturer’s instructions to be followed for circuit breaker installation.

END SECTION

TABLE OF CONTENTS

Part 1 General 2
1.0 Documents 2
1.1 Scope 2
1.2 Related Technical Specifications 2
1.3 Regulatory Requirements 2
1.4 Submittals 2
1.5 Delivery, Storage and Handling 2
Part 2 Products 2
2.0 Motor Control Panel Disconnect Switches 2
2.1 Equipment Identification 3
Part 3 Execution 3
3.0 Installation 3

Revision History

Rev. No.	Date	Description of Revisions	Prep. By	Rev. By
-	May 29, 2026	Issued for Tender	JB	MS

Part 1 General

1.0 DOCUMENTS

.1 This Technical Specification forms a part of the Contract Documents and is to be read, coordinated, and implemented in conjunction with all other parts.

1.1 SCOPE

.1 Materials and installation of disconnect switches.

1.2 RELATED TECHNICAL SPECIFICATIONS

.1 Technical Specification 26 05 00 Common Work Results – Electrical

.2 Technical Specification 26 29 23 11 Variable Frequency Drive

.3 Technical Specification 26 27 16 Electrical Cabinets and Enclosures

1.3 REGULATORY REQUIREMENTS

.1 Canadian Standards Association (CSA International)

.1 CAN/CSA-C22.2 No. 4, Enclosed and Dead-Front Switches (Tri-National Standard, with ANCE NMX-J-162 and UL 98).

.2 CAN/CSA-C22.2 No. 14, Industrial Control Equipment

.3 CSA C22.2 No. 39, Fuseholder Assemblies.

1.4 SUBMITTALS

.1 Submit in accordance with Technical Specification 26 05 00 Common Work Results – Electrical.

1.5 DELIVERY, STORAGE AND HANDLING

.1 Deliver, store and handle materials in accordance with Technical Specification 26 05 00 Common Work Results – Electrical.

Part 2 Products

2.0 MOTOR CONTROL PANEL DISCONNECT SWITCHES

.1 To: CSA C22.2 No. 14

.2 Non-fusible, disconnect switch, suitable for motor disconnect, size as indicated in Contract Drawings.

.3 Operation: rotary on/off with position indication on panel door.

.4 Type: open with external operator, shaft length for handle to be determined by panel builder.

.5 Provision for padlocking in on-off switch position.

.6 Short-circuit rating, as indicated in Contract Drawings.

.7 Auxiliary contacts, as indicated in Contract Drawings

.8 Standard of acceptance: Eaton R5 Series

2.1 EQUIPMENT IDENTIFICATION

.1 Provide equipment identification in accordance with Technical Specification 26 05 00 Common Work Results – Electrical.

.2 Label size: 2.

.3 Nameplate shall include equipment name, voltage, and phase.

.1 Confirm nameplate wording with Contract Administrator prior to manufacture.

Part 3 Execution

3.0 INSTALLATION

.1 Install disconnect switches as indicated in Contract Drawings.

END SECTION

TABLE OF CONTENTS

Part 1 General 2
1.0 Documents 2
1.1 Scope 2
1.2 Related Technical SpecificationS 2
1.3 Regulatory Requirements 2
1.4 Shop Drawings and Submittals 2
1.5 Delivery, Storage and Handling 2
Part 2 Products 2
2.0 Control Relays 2
2.1 Timing Relays 3
2.2 Relay Accessories 3
2.3 Door Switches 3
2.4 Limit Switches 4
2.5 Pushbuttons 4
2.6 Selector Switches 4
2.7 Indicating Lights 4
2.8 24VDC Power Supply and Diode Module 4
2.9 Control Circuit Transformer 4
2.10 Control Fuse Holders and Fuses 5
2.11 Intrinsically Safe Relays 5
2.12 Intrinsically Safe Barriers 5
Part 3 Execution 6
3.0 Installation 6
3.1 Field Quality Control 6

Revision History

Rev. No.	Date	Description of Revisions	Prep. By	Rev. By
-	May 29, 2026	Issued for Tender	JB	MS

Part 1 General

1.0 DOCUMENTS

.1 This Technical Specification forms a part of the Contract Documents and is to be read, coordinated and implemented in conjunction with all other parts.

1.1 SCOPE

.1 Materials and installation for electrical control devices.

1.2 RELATED TECHNICAL SPECIFICATIONS

.1 Technical Specification 26 05 00 Common Work Results - Electrical.

.2 Technical Specification 26 27 16 Electrical Cabinets and Enclosures.

1.3 REGULATORY REQUIREMENTS

.1 CSA International

.1 CSA C22.2 No. 14, Industrial Control Equipment.

.2 National Electrical Manufacturers Association (NEMA)

.1 NEMA ICS 1, Industrial Control and Systems: General Requirements.

1.4 SHOP DRAWINGS AND SUBMITTALS

.1 Submit documents to the Contract Administrator in accordance with Technical Specification 26 05 00 - Common Work Results – Electrical.

1.5 DELIVERY, STORAGE AND HANDLING

.1 Deliver, store and handle materials in accordance with Technical Specification 26 05 00 - Common Work Results – Electrical.

Part 2 Products

2.0 CONTROL RELAYS

.1 Control Relays: to CSA C22.2 No. 14.

.2 Unless otherwise noted, use flat-pin encapsulated type plug-in relays.

.3 120 VAC relays: General purpose, 2PDT, plug-in, complete with test button, operation indicator, and surge suppressor.

.4 24 VDC relays: General purpose type, 2PDT, plug-in, complete with test button, operation indicator (red), and surge suppression RC Circuit. RC circuit may be external to relay using manufacturer's approved components, soldered and insulated using heat-shrink sleeves.

.1 Standard of Acceptance: Phoenix Contact RIF-0-RSC-24DC/21, Phoenix Contact RIF-1-RSP-LDP-24DC/2X21.

.5 Relay contacts: Form C rated 110 VAC, 10A resistive, and 7.5 A inductive.

.6 Provide retainer to hold/secure relay in seated position.

2.1 TIMING RELAYS

.1 Unless otherwise noted, use plug-in timer relays.

.2 Time delay relays for behind panel-mounting: 2PDT, plug-in, and programmable for 16 time ranges and 6 operation modes.

.3 Time delay relays for flush panel mounting and accessible timing range modifications: SPDT, screw terminals, programmable for five timing ranges and nine operation modes, complete with digital display, module for time settings, and flexible protective cover.

.4 Output contact: Form C rated at 250 VAC, 5 amp with p.f. = 1.

.5 Provide relay plug-in sockets for DIN mounting, complete with stacked screw clamp terminals.

.6 Provide retainer to hold/secure relay in seated position.

.7 Standard of Acceptance: IDEC GT3A-3AD24, IDEC GT3F-2AD24.

2.2 RELAY ACCESSORIES

.1 Standard contact cartridges: normally-open - convertible to normally-closed in field.

.2 Relay Socket – Standard of Acceptance: IDEC SR2P-6.

2.3 DOOR SWITCHES

.1 Provide a door switch mounted to the kiosk such that actuation occurs when the outer door with handle is opened, the switch is triggered.

.2 Provide a door switch mounted to the generator enclosure such that actuation occurs when each door with handle is opened.

.3 Door switch shall have a lever type actuation with 1 normally open and 1 normally closed set of contacts.

.4 Door switch shall be suitably rated for hazardous application locations where indicated on the Contract Drawings.

2.4 LIMIT SWITCHES

.1 Minimum standard is heavy duty, oiltight, or as specified for field-located devices.

.2 Adjustable wand-type operating levers.

2.5 PUSHBUTTONS

.1 Panel mountable, 120VAC/24VAC/DC rated, as required, momentary contacts, normally open, 22mm.

.2 Bezel Material: Chromium Plated Metal.

.3 Standard of Acceptance: Eaton M22-DL.

.4 Colour as indicated on Contract Drawings.

2.6 SELECTOR SWITCHES

.1 Panel mountable, two, three or four position, as indicated on the Contract Drawings, 22mm.

.2 Contact arrangement as indicated and to suit control requirements.

.3 120VAC/24VAC/DC rated, as required.

.4 Bezel Material: Chromium Plated Metal

.5 Standard of Acceptance: Eaton M22-WKV.

.6 Colour: Black unless indicated otherwise on Contract Drawings.

2.7 INDICATING LIGHTS

.1 Panel mountable, round, LED-based, push-to-test, 30mm, 24VDC rated, as required.

.2 Bezel Material: Chromium Plated Metal

.3 Colour as indicated on Contract Drawings.

.4 Standard of Acceptance: Eaton M22 Series.

2.8 24VDC POWER SUPPLY AND DIODE MODULE

.1 Power Supply:

.1 Standard of Acceptance: Phoenix Contact QUINT4-PS/1AC/24DC/10A

2.9 CONTROL CIRCUIT TRANSFORMER

.1 Refer to Technical Specification 26 12 16 01 – Dry Type Transformers up to 600V Primary.

2.10 CONTROL FUSE HOLDERS AND FUSES

.1 Applicable to fuses protecting control circuits, primary and secondary windings of instrument transformers, voltage sensing circuits, and other similar circuits.

.2 Type and size as shown or as selected by panel builder for optimum protection of equipment being served. Standard of Acceptance: MERSEN GGM1/4 (250mA), MERSEN GGM2 (2A), or approved equivalent.

.3 Door-mounted fuse holders for small-dimension fuses 6.4 x 31.8 mm (¼" x 1¼ "). Where possible, use different models for different voltages:

.1 120 VAC circuits, Type HKL with clear octagon knob.

.2 12 V dc circuits, Type HKT with amber octagon knob.

.3 24 V dc circuits, Type HKX with amber flat sided knob.

.4 Fuse holders mounted on back pan to be finger safe dead-front type for use with HRC fuses.

2.11 INTRINSICALLY SAFE RELAYS

.1 Suitable for Class 1 Division 2 usage.

.2 DIN rail mounting.

.3 1 and 2 channel devices as specified in Contract Drawings.

.4 120VAC/24VAC/DC rated, as required.

.5 Standard of Acceptance:

.1 Phoenix Contact MACX MCR-EX-SL-2NAM-RO Intrinsically Safe Switch Amplifier, 2-Channel.

.6 Power Supply

.1 Must be permitted for installation in Zone 2 areas.

.2 Standard of Acceptance: Phoenix Contact MACX MCR-PTB Bus Power Supply and Error Message Module or approved equivalent.

2.12 INTRINSICALLY SAFE BARRIERS

.1 Transmits supplied or active 0/4-20mA signals from the hazardous area to a load (active or passive) in the safe area.

.2 Suitable for Class 1 Division 2 usage.

.3 DIN rail mounting.

.4 120VAC/24VAC/DC rated, as required.

.5 Standard of Acceptance:

.1 Phoenix Contact MACX MCR-EX-SL-RPSSI-I Intrinsically Safe Signal Conditioner, 1-Channel.

.6 Power Supply

.1 Must be permitted for installation in Zone 2 areas.

.2 Standard of Acceptance: Phoenix Contact MACX MCR-PTB Bus Power Supply and Error Message Module or approved equivalent.

Part 3 Execution

3.0 INSTALLATION

.1 Install control devices as indicated in Contract Drawings. Make readily accessible for servicing maintenance and adjustments.

3.1 FIELD QUALITY CONTROL

.1 Perform tests in accordance with Technical Specification 26 05 00 - Common Work Results for Electrical and Technical Specification 26 05 10 Testing and Commissioning.

.2 Depending upon magnitude and complexity, divide control system into convenient sections, energize one section at time and check out operation of section.

.3 Upon completion of sectional test, undertake group testing.

.4 Check out complete system for operational sequencing.

END SECTION

TABLE OF CONTENTS

Part 1 General 2
1.0 Documents 2
1.1 Scope 2
1.2 Related Technical Specifications 2
1.3 Regulatory Requirements 2
1.4 Shop Drawings and Submittals 2
1.5 Delivery, Storage and Handling 2
Part 2 Products 2
2.0 General 2
2.1 Mounting Hardware 3
2.2 Interconnecting Cable 4
2.3 Programming Device 4
2.4 Control Components 4
Part 3 Execution 6
3.0 Installation 6
3.1 Field Quality Control 6

Revision History

Rev. No.	Date	Description of Revisions	Prep. By	Rev. By
-	May 29, 2026	Issued for Tender	JB	MS

Part 1 General

1.0 DOCUMENTS

.1 This Technical Specification forms a part of the Contract Documents and is to be read, coordinated and implemented in conjunction with all other parts.

1.1 SCOPE

.1 Materials and installation for Transmitting and Indicating devices.

1.2 RELATED TECHNICAL SPECIFICATIONS

.1 Technical Specification 26 05 00 – Common Work Results for Electrical.

1.3 REGULATORY REQUIREMENTS

.1 CSA International

.1 CSA C22.2 No.14, Industrial Control Equipment.

.2 National Electrical Manufacturers Association (NEMA)

.1 NEMA ICS 1, Industrial Control and Systems: General Requirements.

1.4 SHOP DRAWINGS AND SUBMITTALS

.1 Submit documents to the Contract Administrator in accordance with Technical Specification 26 05 00 - Common Work Results – Electrical.

1.5 DELIVERY, STORAGE AND HANDLING

.1 Deliver, store and handle materials in accordance with Technical Specification 26 05 00 - Common Work Results – Electrical.

Part 2 Products

2.0 GENERAL

.1 Provide each device as a pre-assembled, packaged unit. Upon delivery to the Work Site, each system shall be ready for installation with only final piping and electrical connections required by the Contractor.

.2 Provide power supply to the transmitters and as indicated on the Contract Drawings. Derive any required power for the primary elements from the transmitter.

.3 Install the transmitters to measure the specified process at the ranges and conditions indicated on the Contract Drawings.

.4 Factory-calibrate transmitter to the calibration ranges specified on the Contract Drawings. Calibrate transmitters using NIST-approved bench calibration procedures. Store calibration data digitally in the transmitter. Program transmitter with the instrument tag designation indicated on the Contract Drawings. Submit factory calibration data as described elsewhere in this Technical Specification.

.5 Unless otherwise specified, provide transmitters with integral isolated 4-20 mA output “two wire type” transmitters with operating power derived from the signal loop. Transmitters are to support an external load of up to 600 ohms or greater with a loop power supply of 24 VDC.

.6 Provide transmitters with adequate power output to drive devices associated with that signal loop. Provide signal boosters as required to achieve adequate signal strength.

.7 Transmitter’s 4-20 mA output is to be galvanically isolated from the process and the transmitter case.

.8 Provide microprocessor-based transmitters. For the pressure transmitter sensing cells an isolating diaphragm in combination with a sensing diaphragm using silicone oil as a pressure transmission medium.

.9 Transmitters shall not be damaged by reverse polarity.

.10 Transmitters are to have local indication scaled in Engineering Units and are to include a lamacoid label indicating the Engineering Units. Mount the transmitter such that this indication is correctly oriented and visible from the normal operating floor position.

.11 Transmitters are to have a 3½ digit LCD display, calibrated in engineering units.

.12 Transmitter and/or primary element enclosures (or housings) are to be, as a minimum, rated NEMA 4; where located outdoors or in areas specified as corrosive, enclosures to meet NEMA 4X requirements.

.13 Transmitter flanges, adaptors, and associated bolts, nuts, etc. are to be fabricated from 316 stainless steel.

.14 Two spare fuses of each type required.

2.1 MOUNTING HARDWARE

.1 Provide all mounting brackets, cables, connectors, and hardware necessary to install primary elements.

.2 Provide brackets and mounting hardware to allow standard 50mm pipe-stand or wall mounting, unless otherwise noted.

.3 Fabricate brackets from aluminum or stainless steel and all sundry hardware from stainless steel.

.4 Primary elements and transmitters are to be complete with necessary liquid filling, identification, configuration, etc. as necessary to make the unit ready for use.

2.2 INTERCONNECTING CABLE

.1 Provide an interconnecting cable from the element to the transmitter for systems where the primary element and transmitter are physically separated.

.2 The cable shall be the type approved by the instrument manufacturer for the intended purpose of interfacing the element to the transmitter.

.3 Length of cable shall be a continuous unbroken length sufficient to route via approved supports from the element to the transmitter plus additional length to permit the element to be easily removed and reinstalled.

2.3 PROGRAMMING DEVICE

.1 For systems that require a dedicated programming device for calibration, maintenance, or troubleshooting, provide two such programming devices for each class or type of instrument. Include appropriate operation manuals and the programming device in the training requirements.

.2 For systems that allow the programming device functions to be implemented in software, running on a laptop computer, provide two full licensed copies of the software instead of the programming device.

2.4 CONTROL COMPONENTS

.1 Flow Meter:

.1 Flow meter transmitter to be installed within electrical kiosk.

.2 I/O:

.1 Flow Rate: 4-20mA signal for instantaneous flow

.2 Totalizer: Pulsing output

.3 Approvals: Class I, Div. 1 & 2, Groups A-D

.4 Refer to Mechanical Specifications for additional information.

.5 Basis of Design: Endress+Hauser Promag W 400 Series.

.6 Refer to Mechanical Design for Flow Meter specification.

.2 Wet Well Float Switches:

.1 Provide float switches with contacts that will activate in the presence of liquid.

.2 Specific Gravity: 0.95 – 1.10

.3 Materials:

.1 Body: Polypropylene (Grey)

.2 Length: 162mm

.3 Strain Relief: EPDM Rubber

.4 Weight: Zinc

.4 Cable:

.1 Conductors: 3C No. 18

.2 Length: to suit installation. 20m minimum

.3 Coil excess cable on hanger cable support

.5 Approvals: Class I, Div. 1 & 2, Groups A-D

.6 Standard of acceptance: Flygt ENM-10

.3 Hydrostatic Level Sensor Equipment:

.1 Housing: Stainless Steel

.2 Application: Wastewater

.3 Sensor Outer Diameter: 42mm

.4 Cable: PUR

.5 Approvals: Class I, Div. 1 & 2, Groups A-D

.6 Standard of acceptance: Endress+Hauser FMX21-53LD1/0

.7 Levels in the wet well shall be transmitted to the PLC by means of a submersible pressure transducer suspended within a stilling well in the wet well. For maintenance purposes, the sensor shall be removable without personnel entering the wet well.

.8 Stilling shall be fabricated from 150∅ SCH 40 PVC pipe perforated with 12∅ holes at 50mm c/c for the submerged section.

.4 Airflow Switch:

.1 To be installed within ventilation compartment of electrical kiosk.

.2 Insertion style sensor.

.3 316L series stainless steel

.4 I/O:

.1 Digital Output signal

.5 Approvals: Class I, Div. 1 & 2, Groups B-D

.6 Basis of Design: InnovaSwitch 615 gas and liquid flow switch or FCI FS10i Flow Switch .

.5 Hatch Position Switches:

.1 Voltage: As indicated on contract drawings.

.2 Enclosure Material: 304 stainless steel with corrosion resistant coating (polyurethane)

.3 Approvals: Class I, Div. 1 & 2, Groups A-D

.4 Contact Form: SPDT (Form C)

.5 Lead Wires: 1829mm (72") minimum

.6 Sensing: End Sensing

.7 Standard of Acceptance: Topworx Go Switch 31-17546-A3 c/w AMP3 Magnet or euroSwitch ES-0 Series Proximity Switch - Magnetic

Part 3 Execution

3.0 INSTALLATION

.1 Supply a multi-pole receptacle with all instruments.

.2 Mount transmitters so that interference to the function is not caused by surrounding structures.

3.1 FIELD QUALITY CONTROL

.1 Perform tests in accordance with Technical Specification 26 05 00 Common Work Results - Electrical and Technical Specification 26 05 10 Testing and Commissioning.

END SECTION

TABLE OF CONTENTS

Part 1 General 2
1.0 Documents 2
1.1 Scope 2
1.2 Related Technical Specifications 2
1.3 Regulatory Requirements 2
1.4 Shop Drawings and Submittals 2
1.5 Delivery, Storage and Handling 2
Part 2 Products 2
2.0 General 3
2.1 Ethernet Patch Panels 3
2.2 Network Switches 3
2.3 Modem 3
2.4 Router/Firewall 3
2.5 Copper (Ethernet) Patchcords 4
Part 3 Execution 4
3.0 Installation 4
3.1 Network Connections 5
3.2 Field Quality Control 5

Revision History

Rev. No.	Date	Description of Revisions	Prep. By	Rev. By
-	May 29, 2026	Issued for Tender	JB	MS

Part 1 General

1.0 DOCUMENTS

.1 This Technical Specification forms a part of the Contract Documents and is to be read, coordinated and implemented in conjunction with all other parts.

1.1 SCOPE

.1 Materials and installation of network equipment and topology required.

1.2 RELATED TECHNICAL SPECIFICATIONS

.1 Technical Specification 26 05 00 – Common Work Results for Electrical.

1.3 REGULATORY REQUIREMENTS

.1 TIA/EIA-568-B Commercial Building Telecommunications Cabling Standard.

.2 TIA/EIA-569-A Commercial Building Standard for Telecommunications Pathways and Spaces.

.3 TIA/EIA-606A Administration Standard for the Telecommunications Infrastructure of Commercial Buildings.

.4 TIA/EIA-607A Commercial Building Grounding and Bonding Requirements for Telecommunications.

.5 TIA/EIA-TSB140 Additional guidelines for field testing of Optical Fibre Cabling Systems.

.6 Building Industries Consulting Services, International (BICSI) Telecommunications Distribution Methods Manual (TDMM) – Current edition.

.7 National Fire Protection Agency (NFPA) - 70, Canadian Electrical Code (CEC) – Current Edition.

.8 ISO / IEC 11801 Information Technology - Generic cabling for customer premises.

1.4 SHOP DRAWINGS AND SUBMITTALS

.1 Submit documents to the Contract Administrator in accordance with Technical Specification 26 05 00 - Common Work Results – Electrical.

1.5 DELIVERY, STORAGE AND HANDLING

.1 Deliver, store and handle materials in accordance with Technical Specification 26 05 00 - Common Work Results – Electrical.

Part 2 Products

2.0 GENERAL

.1 All equipment shall be complete with all necessary appurtenances to perform the functions indicated on the Contract Drawings with respect to input and outputs.

.2 The equipment shall be complete with all accessory items, whether specifically mentioned or not, to provide completeness of installation and operation as intended.

2.1 ETHERNET PATCH PANELS

.1 Ethernet Patch Panel shall include the following features:

- .1 Mounting: DIN Rail
- .2 Ethernet TX: RJ-45, 10/100/1000 Mbits/s
- .3 Standard of Acceptance: Phoenix Contact PP-RJ-IDC

2.2 NETWORK SWITCHES

.1 Application: unmanaged industrial ethernet switch

- .1 Ports: 8 10/100BaseTX RJ-45
- .2 Power supply: 24VDC
- .3 Mounting: DIN
- .4 Configurable alarm contact
- .5 Mean time between failure: minimum 1,000,000 hours
- .6 Standard of Acceptance: Phoenix Contact FL Switch 1008N

2.3 MODEM

.1 The pump station shall be equipped with a Rogers/Shaw cable hard wired service and modem for use with the City's SCADA system.

.2 The modem shall be mounted in a mounting bracket adjacent to the control panel, but not inside, to permit easy access for viewing the indicator light and setting the reset button.

.3 The modem shall be sub-fed off the UPS protected receptacle.

2.4 ROUTER/FIREWALL

.1 The modem shall be connected through a Owner supplied router firewall to the communications port on the PLC.

.2 The router/firewall shall be mounted on a shelf or mounting bracket adjacent to or within the control panel. The router/firewall shall be sub-fed by the UPS.

2.5 COPPER (ETHERNET) PATCHCORDS

.1 Supply Patch cords from switches to Media Converters (with lengths to suit) as required, plus 25% spare capacity.

Part 3 Execution

3.0 INSTALLATION

.1 Performance Verification

.1 Copper

.1 Category 6 data cabling systems shall be performance verified using an automated test set. This test set shall be a Level III qualified tester approved by the cabling manufacturer. The test shall be permanent link which tests for the following performance parameters:

1. Wire Map
2. Length
3. Insertion Loss
4. Pair-to-Pair Near End Crosstalk (NEXT)
5. Power Sum Near End Crosstalk (PSNEXT)
6. Equal Level Far End Crosstalk (ELFEXT)
7. Power Sum Equal Level Far End Crosstalk (PSELFEXT)
8. Return Loss (RL)
9. Propagation Delay
10. Delay Skew

.2 Category 6 data cable shall be performance verified using an automated test set. Test results shall be automatically evaluated by the equipment, using the most up-to-date criteria from the ANSI/TIA/EIA-568-B.2.1 Standard, and the result shown as pass/fail. Test results shall be printed directly from the test unit or from a download file using an application from the test equipment manufacturer. The printed test results shall

include all tests performed, the expected test result and the actual test result achieved.

1. Date of the test.
2. Description of equipment used, manufacturer model number and serial number.
3. Date of latest equipment calibration.
4. Test personnel.
5. Trace of the fiber or cabling link.
6. Fiber identifier or circuit identifier with fiber length and fiber attenuation of events.
7. Test wavelength(s).

3.1 NETWORK CONNECTIONS

.1 Configure all fibre patch panels, switches, media converters, TVSS's, wall jacks, fibre patch cords, copper patch cords and other devices as required to provide a complete and functional communications system(s) as specified in this Section

3.2 FIELD QUALITY CONTROL

.1 Perform tests in accordance with Technical Specification 26 05 00 Common Work Results - Electrical and Technical Specification 26 05 10 Testing and Commissioning.

END SECTION

TABLE OF CONTENTS

Part 1 General 2
1.0 Documents 2
1.1 Scope 2
1.2 Related Technical Specifications 2
1.3 Regulatory Requirements 2
1.4 Shop Drawings and Submittals 2
1.5 Delivery, Storage and Handling 2
Part 2 Products 2
2.0 Harmonic Mitigation 3
2.1 Variable Frequency Drives (VFD) 3
2.2 VFD Communications 4
2.3 Disconnect Switch 4
2.4 Control Circuit Transformers 4
2.5 Thermostat (Line Voltage) 4
Part 3 Execution 4
3.0 Installation 5
3.1 Factory Testing 5
3.2 Field Testing and Commissioning 5
3.3 Functional Demonstration Testing 6
3.4 Field Quality Control 6

Revision History

Rev. No.	Date	Description of Revisions	Prep. By	Rev. By
-	May 29, 2026	Issued for Tender	JB	MS

Part 1 General

1.0 DOCUMENTS

.1 This Technical Specification forms a part of the Contract Documents and is to be read, coordinated, and implemented in conjunction with all other parts.

1.1 SCOPE

.1 Materials and installation of Variable Frequency Drives (VFDs).

1.2 RELATED TECHNICAL SPECIFICATIONS

.1 Technical Specification 26 05 00 Common Work Results – Electrical

.2 Technical Specification 26 05 31 Splitters, Junction, Pull Boxes and Cabinets

.3 Technical Specification 26 05 10 Testing and Commissioning

1.3 REGULATORY REQUIREMENTS

.1 The Variable Frequency Drives (VFD) and all components shall be designed, manufactured and tested in accordance with the latest applicable standards.

.1 IEEE 519-1992: Guide for harmonic content and control

.2 UL508C: Power Conversion Equipment

.3 cUL

.4 NEMA ICS 7.0: Industrial Controls & Systems for AFD

.5 IEC 61800-2 and -3

.6 EN 50082-1 and -2

.7 Fulfill all EMC immunity requirements

.2 In case of conflict between the requirements of this section and those of the listed documents, the requirements of this section shall prevail.

1.4 SHOP DRAWINGS AND SUBMITTALS

.1 Submit documents to the Contract Administrator in accordance with Technical Specification 26 05 00 - Common Work Results – Electrical.

1.5 DELIVERY, STORAGE AND HANDLING

.1 Deliver, store and handle materials in accordance with Technical Specification 26 05 00 - Common Work Results – Electrical.

Part 2 Products

2.0 HARMONIC MITIGATION

.1 Line Filter Equipment:

.1 Provide an integrated 5% DC link choke or open frame line reactor. External choke is not acceptable.

.2 DC choke:

.1 The choke shall be a two coil design. DC choke shall include input surge protection.

.2 Load Filter Equipment:

.1 Provide dv/dt filter located at the VFD and shall reduce the dv/dt clamp any voltage overshoots of the VFD output. It will return the energy in the voltage overshoots to the VFD DC bus. A power dissipative resistance device is not acceptable.

2.1 VARIABLE FREQUENCY DRIVES (VFD)

.1 Standard of Acceptance

.1 Eaton DG1 Series or approved equivalent

.2 Pump Motor Drives

.1 The VFDs shall sized per Contract Drawings.

.2 Constant Torque

.3 Overload rating:

.1 150% for one minute of motor FLA

.2 110% continuous of motor FLA.

.4 Provide Terminal blocks for field wiring.

.5 Include inputs for VFD start/stop.

.6 Include relay outputs for VFD running and fault status.

.7 Include analog inputs/outputs for VFD speed setpoint and feedback.

.8 Provide adequate ventilation for stated site conditions.

.9 Mount within enclosure.

.10 Provide remote mounted control panel installed on front door of VFD cabinet.

.1 Include panel platform for docking of control panel.

.11 Standard of Acceptance: Eaton DG1 Series + Panel Holder Mounting Kit

.3 Ventilation Fan

.1 The VFDs shall sized in accordance with the ventilation fan motor ratings, Refer to Mechanical Specifications for motor sizing.

.2 Constant Torque

.3 Overload rating:

.1 150% for one minute of motor FLA

.2 110% continuous of motor FLA.

.4 Provide Terminal blocks for field wiring.

.5 Include inputs for VFD start/stop.

.6 Include relay outputs for VFD running and fault status.

.7 Include analog inputs/outputs for VFD speed setpoint and feedback.

.8 Provide adequate ventilation for stated site conditions.

.9 Mount within enclosure.

.10 Provide remote mounted control panel installed on front door of VFD cabinet.

.1 Include panel platform for docking of control panel.

.11 Standard of Acceptance: Eaton DG1 Series + Panel Holder Mounting Kit

2.2 VFD COMMUNICATIONS

.1 The VFD shall provide at a minimum 1 Modbus TCP communications port.

2.3 DISCONNECT SWITCH

.1 Refer to Technical Specification 26 28 23 – Disconnect Switches – Fused and Non-Fused.

2.4 CONTROL CIRCUIT TRANSFORMERS

.1 Refer to Technical Specification 26 12 16 01 - Dry Type Transformers up to 600V Primary.

2.5 THERMOSTAT (LINE VOLTAGE)

.1 Refer to Technical Specification 26 54 00 – Heaters and Ventilation.

Part 3 Execution

3.0 INSTALLATION

.1 Install control devices and interconnect as indicated on the Contract Drawings and per manufacturers recommendations.

3.1 FACTORY TESTING

.1 Tests shall be performed to verify the proper operation of control devices, input and output signals, local control functions, and indication and alarm points.

.2 The Consultant reserves the right to witness the factory tests. Notify the Consultant 14 working days in advance that the assembly is ready for testing.

.3 Factory testing shall include making final settings and configuration of ModBus TCP system and devices and other programmable or field-configurable components.

3.2 FIELD TESTING AND COMMISSIONING

.1 Operational Readiness Testing

.1 The Contractor shall inspect and test furnished equipment and associated systems for conformance to the contract documents, including equipment manufacture's recommendations, and readiness for operation. The test shall include the following as a minimum:

.2 Visually inspect for physical damage and proper installation

.3 Perform tests in accordance with manufacturer's instructions,

.4 Perform tests in accordance with Technical Specification 26 05 00 - Common Work Results for Electrical and Technical Specification 26 05 10 Testing and Commissioning.

.5 Perform tests that equipment is ready for operation,

.6 Touch-up paint all chips and scratches with manufacturer-supplied paint and transfer remaining paint to Owner,

.2 Contractor shall submit an operational readiness test report documenting all test results, including all assumptions, conditions, allowances and corrections made during the test. The report shall provide a listing of all modifications and adjustments made onsite to include any settings / parameters not identified as factory defaults within the equipment's O&M documentation. The test report shall include a signed statement from the Contractor, installer(s) and the factory-trained manufacturer's representative(s) certifying that the furnished equipment and associated system have been installed, configured, and tested in accordance with the manufacturer's recommendations, completely conforms to the requirements of the Contract Documents and is ready for operation.

3.3 FUNCTIONAL DEMONSTRATION TESTING

.1 Prior to scheduling functional demonstration testing the Contractor shall submit a signed statement from the Contractor, installer(s) and the factory-trained manufacturer's representative(s) certifying that the furnished equipment and associated system have been installed, configured, and tested in accordance with the manufacturer's recommendations, completely conforms to the requirements of the Contract Documents and is ready for operation.

.2 The Contractor shall completely demonstrate the functionality and performance of the equipment and associated systems in the presence of Owner and Engineer, observing and documenting complete compliance with the Contract Documents.

.3 The Contractor shall submit a written report documenting successful completion of functional demonstrating testing including all assumptions, conditions, allowances and corrections made during the test.

3.4 FIELD QUALITY CONTROL

.1 Perform tests in accordance with Technical Specification 26 05 00 - Common Work Results for Electrical and Technical Specification 26 05 10 Testing and Commissioning.

.2 Depending upon magnitude and complexity, divide control system into convenient sections, energize one section at time and check out operation of section.

.3 Upon completion of sectional test, undertake group testing.

.4 Check out complete system for operational sequencing.

END SECTION

TABLE OF CONTENTS

Part 1 General 2
1.0 Documents 2
1.1 Scope 2
1.2 Related Technical Specifications 2
1.3 Regulatory Requirements 2
1.4 Shop Drawings and Submittals 4
1.5 Operations and Maintenance Manual 5
1.6 Warranty 6
1.7 Earthquake Restraint 6
Part 2 Products 6
2.0 General 6
2.1 System Description 7
2.2 Diesel Engine 7
2.3 Alternator 10
2.4 Main Breaker and Load Bank Breaker 10
2.5 Control Panel 11
2.6 Safety Shutdowns, Alarms, and Control 11
2.7 Steel Mounting Base 13
2.8 Fuel System 13
2.9 Exhaust System 13
2.10 Enclosure 13
2.11 Equipment Identification 16
Part 3 Execution 16
3.0 Source Quality Control 16
3.1 Delivery, Storage, and Handling 18
3.2 Installation 18
3.3 Field Commissioning 19

Revision History

Rev. No.	Date	Description of Revisions	Prep. By	Rev. By
-	May 29, 2026	Issued for Tender	JB	MS

Part 1 General

1.0 DOCUMENTS

.1 This Technical Specification forms a part of the Contract Documents and is to be read, coordinated, and implemented in conjunction with all other parts.

1.1 SCOPE

.1 Supply one outdoor standby diesel generator set and all associated equipment as described in this Technical Specification.

.2 Provide factory testing as described in this Technical Specification.

.3 Provide delivery to Site and offload.

.4 Provide full 24 hour sub-base fuel tank, parts, spare parts, tools, and equipment.

.5 Provide field commissioning services to test a complete and operable standby electric generating system, including all devices and equipment specified herein, or required for the service.

.6 Supply documentation as described in this Technical Specification.

.7 Provide a warranty as described in this Technical Specification.

1.2 RELATED TECHNICAL SPECIFICATIONS

.1 Technical Specification 26 05 00 Common Work Results – Electrical

.2 Technical Specification 26 05 10 Testing & Commissioning

.3 Technical Specification 26 05 31 Splitters, Junction, Pull Boxes and Cabinets

.4 Technical Specification 26 50 00 Lighting

1.3 REGULATORY REQUIREMENTS

.1 American Petroleum Institute (API)

.2 UL-142, Standard for aboveground Tanks and Flammable and Combustible Liquids

.3 CAN/ULC S601, Standard for Shop Fabricated Steel Aboveground Tanks for Flammable and Combustible Liquids

.4 Canadian General Standards Board (CGSB)

.5 CAN/CGSB 3.6 2010, Regular Sulfur Diesel Fuel.

.6 Canadian Environmental Protection Act (CEPA)

.7 CCME PN 1326, Environmental Code of Practice for Above ground and Underground Storage Tank Systems for Petroleum Products and Allied Petroleum Products.

.8 CSA International

.9 CSA B139-Series 19 (R2014), Installation Code for Oil Burning Equipment.

.10 CSA 282-15, Emergency Electrical Power Supply for Buildings.

.11 C22.2 NO. 94.1-15 - Enclosures for electrical equipment, non-environmental considerations

.12 C22.2 NO. 94.2-15 - Enclosures for electrical equipment, environmental considerations.

.13 International Organization for Standardization (ISO)

.14 ISO 3046 1 2002, Reciprocating Internal Combustion Engines Performance Part 1: Declarations of Power, Fuel and Lubricating Oil Consumptions, and Test Methods - Additional requirements for engines for general use.

.15 National Electrical Manufacturers Association (NEMA)

.16 NEMA MG 1-2014, Motors and Generators.

.17 Underwriters' Laboratories of Canada (ULC)

.18 CAN/ULC S601 14, Standard for Shop Fabricated Steel Aboveground Horizontal Tanks for Flammable and Combustible Liquids 5th Edition.

.19 CAN/ULC S603 14, Standard for Steel Underground Tanks for Flammable and Combustible Liquids.

1.4 DEFINITIONS

.1 Owner – Westshore Environmental Services

.2 Consultant – Colquitz Engineering / PBX

.3 Supplier – the Company who tenders is subsequently contracted to supply equipment and services as defined in this Technical Specification.

.4 Installation Contractor – the Company to be contracted by the Owner to install the equipment provided by the Supplier.

.5 Site – location(s) of where the equipment is to be delivered and installed.

1.5 SHOP DRAWINGS AND SUBMITTALS

.1 Submit in accordance with Technical Specification 26 05 00 Common Work Results – Electrical.

.2 Product Data:

.1 Provide manufacturer's printed product literature, specifications and data sheets for power generators and include product characteristics, performance criteria, physical size, finish and limitations.

.3 Submittals:

.1 Submit Shop Drawings for generator, and include:

.1 Engine: make and model, with performance curves.

.2 Alternator: make and model.

.3 Voltage regulator: make, model and type.

.4 Battery: make, type and capacity.

.5 Battery charger: make, type and model.

.6 Main circuit breaker and trip unit: make, type and model.

.7 Load bank circuit breaker and trip unit: make, type and model.

.8 Alternator control panel: make and type of meters and controls.

.9 Governor type and model.

.10 Generator enclosure, model and type.

.11 Exhaust system and muffler model and type.

.12 Fuel tank.

.13 Schematic and wiring diagrams of engine, generator, and control panel, complete with interconnecting wiring diagram for automatic transfer switch.

.14 Single line diagram showing all breakers, switches, metering and protective relays.

.15 Complete bill of materials, including manufacturer's name, catalogue numbers and capacity.

.2 Submit dimensioned Shop Drawing showing complete generating system and fuel tank mounted on steel base, including vibration isolators, exhaust system, cooling system, drip trays, and enclosure. Indicate on Shop Drawings:

.1 Horizontal and vertical dimensions.

.2 Minimum door opening required for moving unit.

.3 Clearance requirements from equipment.

.4 Weight of entire assembly with full tank and fluids.

.5 Exact locations and details where necessary of interconnecting services including house load electrical connections, communications connections, general electrical connections, etc.

.3 Include slab anchoring locations and dimensioned foundation template.

.4 Provide conduit stub-up template for use by the Subcontractor responsible for installation of the diesel generator set and all associated equipment.

.5 Provide proof of seismic certification.

.4 Manuals:

.1 Two (2) sets operations and maintenance manuals - to be submitted on delivery

.2 Two (2) sets Engine Shop Manuals & two (2) sets Complete Parts Manual – to be submitted on delivery

.3 One (1) USB flash drive containing searchable PDF files of all final manuals, including maintenance manuals, engine shop manual, parts manual, and shop drawings.

1.6 OPERATIONS AND MAINTENANCE MANUAL

.1 Provide an operation and maintenance manual for the particular unit supplied and not general description of units manufactured by supplier. Such operation and maintenance manual shall include the following items, in sections and with referenced index:

.1 Title page showing pertinent details of the subject generator set.

.2 Table of contents.

.3 Certified copy of factory test reports

.4 Genset ID record including serial numbers and pertinent configuration.

.5 Engine operator's manual.

.6 Voltage regulation equipment operation manual.

.7 Voltage regulation equipment data sheets including batteries, and battery charger.

.8 Control panel equipment data sheets.

.9 Fuel system operator's manual and data sheets.

.10 Ventilation system operator's manual and data sheets.

.11 Exhaust system operator's manual and data sheets.

.12 Mechanical drawings and complete bill of materials as described in action and informational submittals

.13 Include components manufacturer name, and part number in material list to allow ease of purchase for replacement or spare parts.

.14 All other parts listings, maintenance and repair data, wiring diagrams, and schematics for the equipment supplied.

.15 Precise details for adjustment and setting of time delay relays or sensing controls which require on site adjustment.

1.7 WARRANTY

.1 Warranty shall be Five (5) year or Three Thousand (3000)-Hour Comprehensive Limited Warranty which covers parts for 5yrs and labour for 5 years.

.2 Provide terms of warranty.

1.8 EARTHQUAKE RESTRAINT

.1 Generator set shall be factory seismic certified per IBC 2018 standards.

.2 Generator Supplier to provide BC Structural P.Eng stamped seismic report.

Part 2 Products

2.0 GENERAL

.1 All equipment shall be of current production by a firm who manufacturers the generator and control panel and who assembles the standby generator set as a matched unit. All equipment shall be new, factory tested, and delivered ready for installation.

.2 The supplier shall be the manufacturer's authorized distributor, who shall provide initial start-up services, conduct field commissioning services, and provide warranty service. The supplier shall have 24-hour service availability and factory-trained service technicians authorized to do warranty service on all warrantable products. The supplier shall be able to provide onsite parts and service within 24 hours of initial call.

.3 The generator should be Manufactured by Gillette (diesel type). An alternate generator manufacturer must be approved by the Owner’s engineer.

.4 The generator must be sized so that it will not be required to run at more than 80% of its total capacity while having all pumps running simultaneously.

2.1 SYSTEM DESCRIPTION

.1 Generating system shall consist of a fully automatic diesel engine driven electrical generation plant completely equipped with the following:

- .1 Diesel engine.
- .2 Alternator.
- .3 Alternator control panel.
- .4 Generator control panel and annunciator.
- .5 Main electronic trip circuit breaker.
- .6 Load bank electronic trip circuit breaker.
- .7 Battery charger and battery.
- .8 Fuel supply system, including sub-base fuel tank.
- .9 Exhaust system.
- .10 Factory sound attenuated enclosure.
- .11 Steel mounting base.

.2 Generator set to be: 60kW/75kVA, 347/600V, 60Hz, 3 PH., 4W.

.3 System designed to operate as standby.

.4 All components necessary for the satisfactory operation of the standby power system shall be included and installed.

.5 Complete unit shall be CSA approved and meet NFPA current regulations.

2.2 DIESEL ENGINE

.1 Diesel engine: to ISO 3046 1.

.2 Diesel engine-generator set is to be a 4-cycle, 1800 rpm, diesel engine generator set with low reactance brushless generator, single phase RMS sensing automatic voltage regulator, set-mounted control panel, and high ambient cooling system 50 degrees C.

.3 Engine shall be designed to operate on #2 diesel fuel. Diesel engine requiring premium fuels will not be accepted.

.4 Capacity:

.1 Rated continuous power in kW at rated speed, after adjustment for system losses in auxiliary equipment necessary for engine operation; to be calculated as follows: Rated continuous output = Generator kW divided by Generator efficiency at full load.

.1 Under following site conditions:

.1 Altitude: refer to project location.

.2 Installed outdoors.

.5 Performance:

.1 The voltage regulation in a steady state shall be within +/-1.5% for any constant load between no load and rated load at 0.8 P.F.

.2 The adjustment range of the voltage regulator shall be tested and shall be at least +/-10% of the nominal voltage.

.3 Maximum transient voltage dip shall not exceed 20% below rated voltage on application of the single largest surge load step at a 0.8 power factor. Refer to Contract Drawings.

.4 Maximum transient voltage rise shall not exceed 25% above rated voltage on removal of full load at 0.8 power factor.

.5 Transient frequency recovery time within +/- 2% shall be less than 5 seconds.

.6 Governor:

.1 Stability plus or minus 0.5%.

.2 Speed regulation no load to full load 2.5% maximum.

.3 Automatic frequency regulation shall be isochronous from steady state no load to steady state rated load.

.4 Frequency regulation shall be adjustable in droop mode from isochronous to 5% droop.

.6 Cooling System:

.1 Engine shall be cooled by a mounted closed loop radiator system rated for full load operation in 50 degrees C ambient as measured at the generator air inlet.

.2 Block heater: thermostatically controlled lube oil or liquid coolant heater to allow engine to start in lowest ambient temperature experienced at installation location.

.1 Switch and fuse in heater circuit, mounted in engine alternator control cubicle.

.3 All coolant hoses, including block heater hoses, silicon type.

.4 Cooling system shall be filled with 50/50 ethylene glycol/water mixture by the equipment supplier.

.5 Factory installed coolant drain extension to exterior.

.7 Fuel system:

.1 Solid injection, mechanical fuel transfer pump, fuel filters and air cleaner, fuel rack solenoid energized when engine running.

.8 Lubrication system:

.1 Lube oil filter: replaceable, full flow type, removable without disconnecting piping.

.2 Lube oil cooler.

.3 Engine sump drain valve.

.4 Oil level dip stick.

.5 Engine oil drain to exterior of sound attenuated enclosure, complete with manual shut-off valve located inside enclosure.

.9 Starting system:

.1 12 or 24V dc electric starting motor.

.2 Heavy duty, 12 or 24V lead-acid battery with a cold cranking amp rating high than the cold cranking amp requirement of the starter motor.

.3 Battery must have sufficient capacity to crank engine at 10°C for 1 min with a battery end voltage of at least 80% of the rated voltage.

.4 Batteries must be accessible and include battery mounting rack and interconnecting cables of generous length.

.5 Battery charger: fully automatic, three stage, trickle type. Charge at standby to boost charge after use.

.1 Equipped with dc voltmeter, dc ammeter and on off switch.

.2 Minimum charger capacity: capable of recharging a battery discharged by two cranking cycles to 80% of capacity within 4 hours and to full capacity within 12 hours.

.3 Charger shall be mounted at the generator enclosure.

Guards to protect personnel from hot and moving parts.

.1 Locate guards so that normal daily maintenance inspections can be undertaken without their removal.

2.3 ALTERNATOR

.1 The Contractor shall confirm the generator rating and physical size with the manufacturer.

.2 The AC generator shall be: synchronous, four pole, revolving field, brushless type, drip-proof construction, single pre-lubricated sealed bearing, air cooled by a direct drive centrifugal blower fan, and directly connected to the engine with flexible drive disc(s).

.3 All insulation system components shall meet NEMA MG1 temperature limits for Class H, 130°C insulation system.

.4 A permanent magnet generator (PMG) shall provide excitation power for immunity from voltage distortion caused by non-linear loads. The PMG shall sustain excitation power for optimum motor starting and to sustain short circuit current at approximately 300% of rated current for not less than 10 seconds.

.5 Output at 50 degrees C ambient:

.1 100% full load continuously.

.6 The automatic voltage regulator shall be temperature compensated, solid-state design. The voltage regulator shall be equipped with single phase RMS sensing. The regulator shall control buildup of AC generator voltage to provide a linear rise and limit overshoot.

2.4 MAIN BREAKER AND LOAD BANK BREAKER

.1 Two (2) generator mounted 3-pole circuit breakers

.1 Breaker #1 (Main Breaker) – LSI, 100% Rated

.2 Breaker #2 (Load Bank)

.2 Minimum 10kA symmetrical rms interrupting capacity rating.

.3 Operate by means of solid state trip unit with associated current monitors and self-powered shunt trip to provide inverse time current trip under overload condition, and long/short time/instantaneous tripping for short circuit protection.

.4 Include Form-C contacts to indicate open/closed position. Breaker auxiliary contact to be wired to “Breaker open alarm” on generator controller.

.5 Circuit breaker shall be so located that the feeder conduits rise straight out of the floor into the bottom of the breaker enclosure.

.6 Load Bank Circuit Breaker to come with shunt trip, wired to transfer switch to trip load bank breaker if power fails during load testing.

2.5 CONTROL PANEL

.1 The NEMA 12 weatherproof enclosed control panel shall be mounted on the generator set with vibration isolators, and contain a digital solid-state based generator controller.

.2 Control panel features shall include:

.1 Engine Oil Pressure Gauge, Coolant Temperature Gauge, DC Voltmeter, and Running Time Meter (hours).

.2 Voltage adjustment to adjust voltage ±5% from rated value.

.3 Voltage for each phase, 2% accuracy.

.4 Current for each phase, 2% accuracy.

.5 Frequency/RPM, ±0.3 Hz accuracy.

.6 Panel illuminating light.

.7 Battery charging ammeter.

.3 Operating indication:

.1 "Normal power"

.2 "Emergency power"

.3 “Auto”

.4 “Off”

.4 Run/Off/Auto Selection

.5 Fault Annunciation Indication

.6 Communications:

.1 Controller shall be equipped to accept a plug-in device capable of allowing maintenance personnel to test controller performance without operating the engine.

.2 Include network interface card: Modbus TCP over Ethernet.

.3 Include monitoring software, if available.

2.6 SAFETY SHUTDOWNS, ALARMS, AND CONTROL

.1 Digital engine controller to be mounted on unit.

.2 Each of the items below shall have configurable shutdown feature and separate fault annunciation:

.1 Low oil pressure

.2 Low coolant level

.3 High engine temperature

.4 Over temperature on alternator

.5 Over/under speed

.6 Overcrank

.7 Over/under voltage

.8 Fuel leakage

.9 Low fuel level.

.10 Low battery voltage.

.11 Short circuit.

.3 Engine start delay (0-240 sec.)

.4 Overcrank delay (0-240 sec.)

.5 All wiring and contacts shall terminate in the generator control panel and shall land on clearly identified and easily accessible terminal blocks intended for customer use.

.6 Form C contacts for the following alarms and operations (refer to Contract Drawings for quantity of contacts required for monitoring purposes):

.1 Generator running: NO/NC contacts that change state on generator run.

.2 Generator Fail: NO/NC contacts that change state on Generator Fail. Include tank leakage as a Generator Fail.

.3 Common Alarm: NO/NC contacts that change state on warning. Warnings are alarms which do not cause the generator to shut down or cause the generator to otherwise be unavailable.

.4 Low Fuel Alarm: NO/NC contacts that change state on a low fuel alarm.

.5 Breaker Open Alarm: NO/NC contacts that change state on a Breaker open position.

.6 Run Mode Relay: NO/NC contacts that change state on ”not in auto” position.

.7 The noted contacts shall be available for customer use and available for connection in the generator control panel in a clearly identified terminal block.

2.7 STEEL MOUNTING BASE

.1 Complete generating set and fuel tank mounted on steel base of sufficient strength and rigidity to protect assembly from stress or strain during transportation, installation and under operating conditions on suitable level surface.

2.8 FUEL SYSTEM

.1 Fuel tank to be sized for 24 hours of continuous operation at full load.

.2 Above-ground fuel tank to be belly-style, included in the generator sub-base and shall be double-contained/double-walled, and be supplied complete with a leakage sensor.

.3 Include fill and vent lines with weatherhoods, fuel level gauge and vent alarm, drain and end plug, feed and return lines, with flexible terminations at engine, shut off cock, renewable cartridge filter, fire valve.

.4 Primary and secondary fuel filters to be spin-on type of easy access.

.5 Low fuel level alarms for remote indication: 1/8, 1/4, and 1/3 fuel level sensors.

.6 Sub-base fuel tank must include all accessories to meet current CSA B139-Series 19 code, including, but not limited to, extension of fuel tank, vents and fill to exterior of enclosure, overfill prevention valve, high fuel alarm and fuel fill alarm.

2.9 EXHAUST SYSTEM

.1 Exhaust silencer with condensate drain, plug and flanged couplings, shall be mounted within the genset enclosure.

.2 Cap on muffler exhaust with additional lockable screen over top to prevent vandals from dropping debris inside.

.3 Fittings and accessories, as required.

.4 Expansion joints: stainless steel, corrugated, of suitable length, to absorb both vertical and horizontal expansion.

2.10 ENCLOSURE

.1 Factory manufactured and installed enclosure shall be weatherproof, sound attenuated, rigid, free-standing, vandal resistant, highly corrosion resistant enclosure complete with heating and lighting.

.2 Enclosure shall be rated UL-2200 and certified to CAN/CSA C22.2 No. 94.1-15 and CAN/CSA C22.2 No. 94.2-15.

.3 All enclosure assemblies shall be from the same manufacturer, shall bear the CSA seal of approval, or other certification mark acceptable in the Province of British Columbia, and be manufactured by an enclosure manufacturer regularly engaged in this type of work

.4 Enclosure dimensions on Contract Drawings are approximate only. Contractor to determine final dimensions to layout of all proposed equipment on Site.

.5 Sound Attenuation:

.1 Sound attenuated on inside surface to obtain 65dBA when measured at a distance of 7 meters from any side of the enclosure and 1 meter above ground.

.2 Compliance with this requirement shall be provided and demonstrated during factory testing.

.3 Compliance with this requirement shall be verified on site.

.4 Sound level verification shall be performed with genset at full load.

.6 General Material Requirements:

.1 All materials shall be new.

.2 Equipment shall be fabricated from marine grade aluminum.

.3 Use stainless steel hardware, unless otherwise noted.

.7 Generator enclosure shall include the following equipment:

.1 Gravity air intake dampers.

.2 Gravity air discharge dampers.

.8 Connecting Hardware:

.1 Miscellaneous hardware other than screws, nuts, bolts and washers shall be stainless steel.

.2 Connecting hardware (i.e. screws, nuts, bolts and washers) 3/8” diameter or smaller and shall conform to the following:

.1 All hardware shall have unified national thread form (ANSI) and shall be stainless steel.

.9 Fabrication Mechanical Requirements

.1 The enclosure shall be fabricated with sufficient bracing to form a structure capable of withstanding transportation, wind, snow and ice loading.

.1 Recommended anchor locations shall be provided on Shop Drawings.

.2 Anchor requirements shall be provided based on wind, snow and seismic loading criteria for the geographic location of the installation.

.3 Importance factor of one (1) shall be considered for the installation.

.2 Doors:

.1 Doors shall have internal bracing when required to prevent excessive distortion. Doors shall be at least 100mm above concrete

.2 All enclosure doors are to be lockable. The latches must contain minimum 13 mm diameter hole to be able to receive padlock.

.3 Handles, latches and padlocks shall be recessed such that they cannot be struck off or cut with a standard hacksaw. Handle shall not protrude from recessed pocket during operation.

.4 Door hardware to be mounted with tamper resistant hardware.

.5 Each door shall have factory installed door restraints.

.6 Hinges shall be hidden and not accessible from the outside with the door closed. Hinge body to be aluminum with stainless steel hinge pin. Hinges to be of permanently lubricated design.

.3 Door Gaskets:

.1 The gasket shall be of one continuous piece per side (ex. four strips per opening) and shall be permanently bonded to the metal.

.2 The gasket shall be of an appropriate length so as not to have gaps at gasket joints or to shrink over time.

.3 The surface of the gasket shall be covered with a silicon lubricant to prevent sticking to the mating surface.

.4 The hinge shall be designed to prevent binding of the gasket

.10 Enclosure Finish

.1 General Requirements:

.1 The powder coating process shall be tested on at least one piece from a given batch of aluminum components to ensure a high-quality coating for that type of component before the complete batch is powder coated. If there is uncertainty about the quality or appearance of the powder coating, the Contractor shall obtain the Owner’s approval on the powder coating.

.2 Items to be powder coated shall be free of dents, scratches, weld burns, ripples, pits, and abrasion before powder coating.

.3 Removable components which may be damaged by the powder coating process shall be removed before powder coating and reassembled after powder coating.

.4 Mask all threaded hardware and tapped holes, as required.

.5 Generator to be shrink-wrapped with image approved by owner.

.6 Powder coat colour: RAL code to be provided by the Owner at the time of Shop Drawing review. Supplier shall provide RAL code on request for purposes of matching other equipment on site.

.7 Generator to be shrink-wrapped with image as approved by owner.

.11 Enclosure shall be vandal resistant

.1 Externally accessible fasteners shall preferably be blind head although Allen head will be permissible.

.2 Air inlet and outlet openings shall be designed such that objects of any size directed at the enclosure from vertically downward to horizontally flat cannot enter. Air inlet and outlet openings shall be sized such that inlet air velocity is below he level at which water penetration will occur.

.12 Engine coolant and oil drains to exterior of sound attenuated enclosure complete with manual shut off valve located inside enclosure.

2.11 EQUIPMENT IDENTIFICATION

.1 Provide equipment identification in accordance with Technical Specification 26 05 00 Common Work Results - Electrical.

.2 Enclosure shall be labelled with the Supplier’s company name, model number, panel rating and date of manufacture. This label shall be located on the inside of the enclosure in an easy to read location.

Part 3 Execution

3.0 SOURCE QUALITY CONTROL

.1 Notify Contract Administrator 10 Business Days in advance of date of factory test. Contract Administrator may be present for testing outlined in this Technical Specification.

.2 Test procedure:

.1 Prepare blank forms and check sheet with spaces to record data and at top of first sheet record:

.1 Date.

.2 Generator set serial no.

.3 Engine, make, model, serial no.

.4 Alternator, make, model, serial no.

.5 Voltage regulator, make and model.

.6 Rating of generator set, kW, kVA, V, A, r/min, Hz.

.2 Mark check sheet and record data on forms in duplicate as test proceeds.

.3 The engine generator set and the testing results shall meet current CSA standard C282 including the following tests:

.1 Generator to be tested at generator manufacturers facility for four (4) hours at full load and 0.8 power factor, taking readings at 15 minute intervals, and record the following:

.1 Time of reading.

.2 Running time.

.3 Ambient temp in degrees C.

.4 Lube oil pressure in kPa.

.5 Lube oil temp in degrees C.

.6 Alternator voltage: phase 1-2, 2-3, 1-3.

.7 Alternator current: phase 1, 2, 3.

.8 Power in kW.

.9 Frequency in Hz.

.10 Power Factor.

.11 Battery charger current in A.

.12 Battery voltage.

After completion of 4 hours run, demonstrate following shut down devices and alarms:

.13 Overcranking.

.14 Overspeed.

.15 High engine temp.

.16 Low lube oil pressure.

.17 Short circuit.

.18 Alternator over voltage.

.19 Low battery voltage, or no battery charge.

.20 Manual remote emergency stop.

.21 High alternator temperature.

.22 Tank leakage.

.4 Provide sound measurement results.

3.1 DELIVERY, STORAGE, AND HANDLING

.1 The equipment shall at all times, while in the care, custody, and control of the Supplier, be protected from damage or deterioration of any sort whatsoever.

.2 Spare parts, special tools, loose items etc., shall be packed separately from the standby generator and the containers used shall be clearly marked to indicate the contents.

.3 Provide minimum 12.5mm plywood outer covering with single vapour barrier inside.

.4 Mount unit and panel on shipping skids with plank floor.

.5 Each package to have shipping weight, address, dimensions, and brief description of contents stenciled on at least two sides.

.6 Prior to shipping the standby generator, the Supplier shall contact the Owner.

.7 Minimum three weeks notice is required.

.8 Total weight shall be provided.

.9 Instructions on how to off-load and store the equipment until it is able to be permanently installed shall be provided.

.10 The equipment shall be delivered to Langford, British Columbia:

.1 Delem Road

.11 The standby generator shall be unloaded by the Installation Contractor.

.12 Deliver, store and handle materials in accordance with Technical Specification 26 05 00 Common Work Results – Electrical.

.13 After the genset is installed, temporary power shall be connected to the unit to energize the space heating

3.2 INSTALLATION

.1 General

.1 The Contractor shall provide all necessary hoists, skids, temporary supports and beams to assist with installing the genset.

.2 The generating set shall be positioned on the seismic restraints neoprene pad type vibration isolators, supplied with the set, and carefully aligned and positioned as detailed on the Shop Drawings.

.3 The vibration isolator seismic restraints and anchor bolts shall be installed as per the manufacturer's instructions. The installation must be inspected and certified by the manufacturer's representative.

.4 Ensure that there are no rigid connections or incidental physical contacts between isolated equipment and the building structure or nearby systems.

.5 Select and locate vibration isolation equipment to give uniform loading and deflection, according to weight distribution of equipment.

.6 Complete wiring and interconnections as indicated.

.2 Fuel System

.1 Install sub-base tank and secure to the concrete slab with anchors as specified by the manufacturer.

.2 All unused surplus bungs in the fuel tank shall be plugged.

.3 Exhaust System

.1 Ship loose exhaust components to be installed on-site by contractor. Generator supplier to provide instructions/assistance via phone or email as required.

3.3 FIELD COMMISSIONING

.1 Notify the Contract Administrator 10 Business Days in advance of test date.

.2 Provide fuel for testing and leave full tanks on acceptance.

.3 Demonstrate:

.1 Unit start, transfer to load, retransfer to normal power, unit shut down, on "Automatic" control.

.2 Unit start and shut down on "Manual" control

.3 Unit start and transfer on "Test" control.

.4 Unit start on "Engine start" control.

.5 Operation of manual bypass switch.

.6 Operation of automatic alarms and shut down devices.

.7 Install continuous strip chart recorders to record frequency and voltage variations during load switching procedures. Each load change delayed until steady state conditions exist. Switching increments to include:

.1 No load to full load to no load.

.2 No load to 70% load to no load.

.3 No load to 20% load to no load.

.4 20% load to 40% load to no load.

.5 40% load to 60% load to no load.

.6 60% load to 80% load to no load.

.4 Run unit on 100% load for minimum period of 4h to show load carrying ability, stability of voltage and frequency, and satisfactory performance of dampers in ventilating system to provide adequate engine cooling. No adjusting of speed or voltage shall be made after the load tests have commenced.

.1 Generator supplier to be responsible for supplying all fuel and fluids for commissioning generator.

.5 At end of test run, check battery voltage to demonstrate battery charger has returned battery to fully charged state.

.6 After completion of 4 hours run, demonstrate following shut down devices and alarms:

.1 Overcranking.

.2 High engine temp.

.3 Low lube oil pressure.

.4 Low battery voltage, or no battery charge.

.5 Manual remote emergency stop.

.6 Tank leakage.

.7 Provide test reports from shop/factory that sensors were tested, in accordance with the Division 26 Technical Specifications and trip points documented. Provide certified documents.

END SECTION

TABLE OF CONTENTS

Part 1 General 2
1.0 Documents 2
1.1 Scope 2
1.2 Related Technical Specifications 2
1.3 Regulatory Requirements 2
1.4 Shop Drawings and Submittals 2
1.5 Delivery, Storage and Handling 3
Part 2 Products 3
2.0 Standard of Acceptance 3
2.1 System Description 3
2.2 Performance 3
2.3 Uninterruptible Power System 4
2.4 Battery 5
2.5 Display and Controls 5
Part 3 Execution 5
3.0 Installation 6
3.1 Testing 6

Revision History

Rev. No.	Date	Description of Revisions	Prep. By	Rev. By
-	May 29, 2026	Issued for Tender	JB	MS

Part 1 General

1.0 DOCUMENTS

.1 This Technical Specification forms a part of the Contract Documents and is to be read, coordinated, and implemented in conjunction with all other parts.

1.1 SCOPE

.1 Materials and installation for uninterruptable power supplies.

1.2 RELATED TECHNICAL SPECIFICATIONS

.1 Technical Specification 26 05 00 Common Work Results - Electrical.

1.3 REGULATORY REQUIREMENTS

.1 CSA International

.2 CSA C22.2 No 107.1 – Power Conversion Equipment

.3 CSA C22.2 No 107.2 – Battery Chargers

.4 CSA C22.2 No 107.3 – Uninterruptible Power Systems

.5 CSA C813.1 – Performance Test Methods for Uninterruptible Power Supplies

.6 IEC 62040 - Uninterruptible Power Systems (UPS)

.7 IEEE 1184 – IEEE Guide for Batteries for Uninterruptible Power Supply Systems

.8 IEEE C62.41.1 – IEEE Guide on the Surge Environment in Low Voltage (1000V or less) AC Power Circuits

.9 IEEE C62.41.2 – IEEE Recommended Practice on Characterization of Surge in Low Voltage (1000V or less) AC Power Circuits

.10 NEMA PE1 - Uninterruptible Power Systems (UPS) – Specification and Performance Verification

1.4 SHOP DRAWINGS AND SUBMITTALS

.1 Submit in accordance with Technical Specification 26 05 00 Common Work Results – Electrical.

1.5 DELIVERY, STORAGE AND HANDLING

.1 Deliver, store and handle materials in accordance with Technical Specification 26 05 00 Common Work Results – Electrical.

Part 2 Products

2.0 STANDARD OF ACCEPTANCE

.1 Eaton 9SX1000 with Eaton RELAY-MS card and Eaton 9SX extended battery module.

.1 The Contractor shall provide the City with a ten-year manufacturer’s warranty for this UPS unit.

2.1 SYSTEM DESCRIPTION

.1 The UPS is to operate in conjunction with the electrical system to provide power conditioning and backup power protection for electronic equipment loads.

.2 System is to use normal power supply mains and battery to provide continuous, regulated sinusoidal AC power to isolated load.

.3 Equipment to operate continuously and unattended.

.4 Ensure that Uninterruptible Power Systems (UPS) is compatible with equipment that it feeds and with source from which it is fed.

2.2 PERFORMANCE

.1 Normal Mode:

.1 The rectifier shall derive power as needed from the commercial AC utility or generator source and supply filtered and regulated DC power to the on-line inverter. The inverter shall convert the DC power at its input to highly regulated and filtered AC power for the critical loads.

.2 Battery Mode:

.1 Upon complete failure of utility power, the UPS shall provide power to the critical loads through the inverter, from the internal or extended batteries. When utility power returns, the unit shall return to Normal operation.

.3 By-Pass Mode:

.1 The automatic bypass shall transfer the critical load to the commercial AC source, bypassing the UPS's inverter/rectifier, in the case of an overload, load fault, or internal failure

.4 Standby Mode:

.1 When initially attached to a utility or other power source, the UPS shall start in standby mode until the user initiates power to the critical load. In this mode, the UPS shall recharge the batteries, but power shall not be supplied to the critical load.

2.3 UNINTERRUPTIBLE POWER SYSTEM

.1 Input power:

.1 Voltage and phase as indicated on Contract Drawings.

.2 Normal supply from AC mains.

.3 Emergency supply from standby automatic diesel-electric unit.

.2 Output power:

.1 Voltage and phase as indicated on Contract Drawings.

.2 The UPS shall attempt to clear overloads while remaining on inverter in normal operation before transferring to bypass.

.3 Frequency - nominal 60 Hz:

.4 Duration of full load output after mains failure not less than [15] minutes

.5 Output voltage control:

.1 Continuously adjustable on load at least 5% from rated value.

.2 Voltage regulation: voltage not to change by more than 2% as load increases gradually from zero to 100%, or for specified duration of full load after mains failure.

.3 Transient voltage change not to exceed +/-10% of rated voltage upon 50% sudden load change, loss or return of AC input voltage to system when fully loaded or transfer of full load from inverter to bypass and vice versa, and return to normal within 3 Hz.

2.4 BATTERY

.1 External battery type to be maintenance free, non spillable, lead acid cells.

.2 Hot swappable internal batteries.

.3 UPS shall have enough capacity to power devices for a period of 2 hours after utility power has failed.

2.5 DISPLAY AND CONTROLS

.1 The UPS shall be provided with a full graphical LCD display that provides the information and access to all settings and control features of the UPS.

.2 The main status screen shall include all the following information at a single view

.1 UPS mode status

.2 Load information:

.1 Load wattage

.2 Load VA

.3 Load percentage

.4 Graphical representation of load %

.3 Battery Condition

.1 Battery charge percentage

.2 Estimated runtime

.3 Number of EBMs connected

.4 Graphical representation of battery %

.4 Alert / Alarm conditions

.5 Efficiency

Part 3 Execution

3.0 INSTALLATION

.1 Locate UPS cubicles, battery rack and battery as indicated.

.2 Assemble and interconnect components to provide complete UPS as specified.

.3 Connect AC mains to main input terminal.

.4 Connect UPS output to load.

.5 Start-up UPS and make preliminary tests to ensure satisfactory performance.

3.1 TESTING

.1 Perform tests in accordance with Technical Specification 26 05 00 - Common Work Results for Electrical, Technical Specification 26 05 10 Testing and Commissioning, and CAN/CSA-C813.1.

.2 Provide:

.1 Competent field personnel to perform test, adjustments and instruction on UPS equipment.

.3 Tests:

.1 Inspection of cubicles, battery rack and battery.

.2 Inspection of electrical connections.

.3 Inspection of installation of remote mode lights and alarms.

.4 Demonstration of system start-up and shut-down.

.5 Run UPS for minimum period of 4 hours at full rated load to demonstrate proper operation with AC mains input, emergency generator input, no AC input.

.6 Discharge battery by operating UPS with AC mains open for specified duration of full load. Record readings of temperature of each cell.

.7 Recharge battery automatically with full rated load on UPS for 4 hours and record readings of voltage of each cell.

END SECTION

TABLE OF CONTENTS

Part 1 General 2
1.0 Documents 2
1.1 Scope 2
1.2 Related Technical Specifications 2
1.3 Regulatory Requirements 2
1.4 Shop Drawings and Submittals 2
1.5 Delivery, Storage and Handling 2
Part 2 Products 2
2.0 System Description 3
2.1 Transfer Switch 3
Part 3 Execution 10
3.0 Installation 10
3.1 Field Quality Control 10

Revision History

Rev. No.	Date	Description of Revisions	Prep. By	Rev. By
-	May 29, 2026	Issued for Tender	JB	MS

Part 1 General

1.0 DOCUMENTS

.1 This Technical Specification forms a part of the Contract Documents and is to be read, coordinated, and implemented in conjunction with all other parts.

1.1 SCOPE

.1 Materials and installation for automatic transfer switches.

1.2 RELATED TECHNICAL SPECIFICATIONS

.1 Technical Specification 26 05 00 Common Work Results - Electrical.

.2 Technical Specification 26 05 10 Testing and Commissioning.

1.3 REGULATORY REQUIREMENTS

.1 Canadian Standards Association (CSA International)

.1 CSA C22.2 No.178.1-14, Transfer Switch Equipment.

.2 The Automatic Transfer Switch shall be designed, manufactured, tested and listed to the following safety standards:

.1 UL 1008 Edition 8 - Automatic Transfer Switches For Use in Emergency Systems

.2 UL 869A - Reference Standard Service Equipment

.3 CSA - C22.2 No 178.1-12 - Automatic Transfer Switches

1.4 SHOP DRAWINGS AND SUBMITTALS

.1 Submit in accordance with Technical Specification 26 05 00 Common Work Results – Electrical.

1.5 DELIVERY, STORAGE AND HANDLING

.1 Deliver, store and handle materials in accordance with Technical Specification 26 05 00 Common Work Results – Electrical.

Part 2 Products

2.0 SYSTEM DESCRIPTION

.1 It is intended for the Automatic Transfer Switch (ATS) to operate in the following modes:

.1 The ATS shall continually monitor the condition of the utility supply voltage/frequency and shall automatically respond to a utility power failure condition by issuing an engine start signal to the standby generators(s) in the system.

.2 The ATS shall automatically transfer the load to the generator supply in the event of a utility supply failure and return the load to the utility supply upon restoration.

.3 The ATS shall perform an open transition power transfer with a neutral delay period between operating generator and the utility supply once the utility power source has been restored.

.4 When an On Load test mode is activated, the ATS shall automatically transfer the load to the generator supply and return the load to the utility supply upon test completion.

.2 All work defined within this specification shall be the responsibility of the Automatic Transfer Switch manufacturer, unless specifically defined as provided and/or installed by others.

2.1 TRANSFER SWITCH

.1 Rating: As indicated on Contract Drawings.

.2 Operation: Open Transition

.3 Transfer switch to be mechanically held type.

.4 The complete ATS assembly shall be mounted as indicated on the Contract Drawings.

.5 Exercise Timer with load on, 7 day, with battery backup.

.6 Time Delays:

.1 Engine Start - A time delay on engine start shall be provided to delay the engine start signal after failure of the utility source. The time delay shall be user adjustable 0 - 60 seconds, factory set at three (3) seconds.

.2 Engine Warmup - A time delay for engine warm up shall be provided which permits transfer to the generator supply after generator voltage and frequency have reached acceptable limits. The time delay shall be user adjustable 0 - 60 minutes, factory set at two (2) seconds.

.3 Utility Return - A time delay for return to utility shall be provided which permits a re-transfer back to the utility supply only after stable voltage and frequency condition exists for the specified time period. The time delay shall be user adjustable 0 - 60 minutes, factory set at five (5) minutes.

.4 Engine Cooldown - A time delay for engine cooldown shall be provided which delays the engine stop signal after load has re-transferred back to the utility source. The time delay shall be user adjustable 0 - 60 minutes, factory set at five (5) minutes.

.5 Neutral Delay - A time delay for neutral position shall be provided in the open transition mode to minimize the effect of out-of-phase transfer due to connected motor load. The time delay shall be user adjustable 0 - 120 seconds, factory set at three (3) seconds.

.6 Gen Commit to Transfer Delay - A time delay for Gen Commit to Transfer position shall be provided. Should the generator fail to transfer on load with the “commit to transfer” feature enabled, the ATS shall automatically re-transfer back to the utility supply if within nominal limits following expiry of the “Gen Commit to Transfer” timer. The time delay shall be user adjustable 0 - 600 seconds, factory set at three hundred (300) seconds.

.7 Transfer Fail Delay - A time delay for Transfer Fail delay shall be provided. The timer shall activate a fail alarm condition if the transfer switch fails to successfully transfer within the transfer fail time delay setting. The time delay shall be user adjustable 0 - 600 seconds, factory set at thirty (30) seconds.

.7 The transfer controller shall provide a timer bypass function to automatically bypass unwanted delays during testing or maintenance procedures. The timers shall automatically reset on the next operation sequence to their original setting. The following time delays shall have a user initiated bypass feature:

.1 Engine Warmup Delay

.2 Utility Return Timer

.3 Engine Cooldown Timer

.4 Neutral Delay Timer

.8 Integrated surge suppression.

.9 Auxiliary contacts:

.1 2 sets NO/NC contacts for transfer switch in “On Utility”

.2 2 sets NO/NC contacts for transfer switch in “On Generator”

.3 2 sets NO/NC contacts for utility power available

.4 2 sets NO/NC contacts for transfer switch “Not in Auto”

.5 2 sets NO/NC contacts for transfer switch internal fault

.10 Shunt trip generator switch. A Shunt trip device shall be provided in the Generator transfer power switching device to provide remote tripping capability for load shedding or load dumping purposes. Shunt trip device shall be rated for 24Vdc 10A control power, which shall be to be supplied by an external source with required logic and over current protection.

.11 Shunt trip utility switch. A Shunt trip device shall be provided in the Utility transfer power-switching device to provide remote tripping capability for immediate load dumping purposes. Shunt trip device shall be rated for 24Vdc 10A control power, which shall be to be supplied by an external source with required logic and over current protection.

.12 Relay Control for load bank circuit breaker shunt trip. Contact must sustain 30A inrush current draw from shunt trip solenoid. Coordinate with Generator Supplier.

.13 Front panel HMI shall display, at minimum:

.1 Utility power available

.2 Generator power available

.3 Transfer switch in utility position

.4 Transfer switch in emergency position

.5 Transfer switch fault condition

.6 Utility voltage

.7 Generator voltage

.8 Phase rotation

.14 Controller input for “Transfer Inhibit” functionality via relay dry contact.

.15 Voltage/Frequency sensing: The ATS controller shall provide the following voltage and frequency sensing control features for the utility and generator supplies:

.1 The Transfer Switch controller shall have fully integrated 120-600V, 3 phase true RMS AC voltage sensing on the Utility Supply, generator supply and ATS Load bus for operation and monitoring. Programmable set points shall be provided for utility/generator source under voltage, overvoltage, and phase unbalance.

.2 AC voltage sensing shall utilize advanced symmetrical component algorithms to determine positive, negative and zero sequence voltages. This shall provide the capability to detect true phase loss/unbalance (i.e. single phasing) protection on 3 phase systems where re-generative phase voltages maybe present due to failed 3 phase transformers or motor loads.

.3 AC Voltage sensing shall be fully configurable to allow operation on 3 phase 3 wire or 3 phase 4 wire systems without use of additional potential transformers on systems 600VAC or below.

.4 Phase Sequence & Phase Reversal Protection: Phase Sequence/Phase reversal protection shall be provided to inhibit transfer between alternate sources should an incorrect phase sequence condition exist between connected sources. The Transfer Switch controller shall provide capability to program either A-B-C or C-B-A phase rotation.

.5 Under Voltage Sensing: Three phase under voltage sensing shall be provided for both utility and generator supplies. Activation of an abnormal under voltage condition on any phase shall initiate a load transfer to the alternate source or shall inhibit a transfer to a source until its voltage levels are within normal limits. The under-voltage sensor shall be user adjustable from 70-100% of nominal and shall be based on a falling (i.e. drop-out) voltage. The under-voltage sensor shall be factory set for drop-out at 85% nominal voltage. The under-voltage sensor shall reset (i.e. pick-up) 5% above the dropout setting and shall be adjustable. The under-voltage sensor shall include an adjustable transient time delay feature.

.6 Over Voltage Sensing: Three phase over voltage sensing shall be provided for both utility and generator supplies. Activation of an abnormal over voltage condition on any phase shall initiate a load transfer to the alternate source or shall inhibit a transfer to a source until its voltage levels are within normal limits. The over voltage sensor shall be user adjustable from 100-130% of nominal and shall be based on a rising (i.e. pick-up) voltage. The over voltage sensor shall be factory set for pick-up at 115% nominal voltage. The over voltage sensor shall reset (i.e. drop-out) 5% below the pick-up setting and shall be adjustable. The over voltage sensor shall include an adjustable transient time delay feature.

.7 Phase Unbalance/Phase Loss Sensing: Voltage phase unbalance/phase loss sensing shall be provided for the generator and utility supplies. Activation of an abnormal utility phase unbalance condition shall initiate the generator to start and to transfer on load. The voltage phase unbalance sensor shall be user adjustable from 3-30% of nominal and shall be factory set for pick-up at 5% nominal voltage. The voltage phase unbalance sensor shall include an adjustable transient time delay feature.

.8 Under Frequency Sensing: Under frequency sensing shall be provided for both utility and generator supplies. Activation of an abnormal under frequency condition shall initiate a load transfer to the alternate source or shall inhibit a transfer to a source until its frequency levels are within normal limits. The under-frequency sensor shall be user adjustable from 70-100% of nominal and shall be based on a falling (i.e. drop-out) frequency. The under-frequency sensor shall be factory set for drop out at 80% nominal frequency. The under-frequency sensor shall reset (i.e. pick-up) 10% above the dropout setting and shall be adjustable. The under-frequency sensor shall include an adjustable transient time delay feature.

.9 Over Frequency Sensing: Over frequency sensing shall be provided for both utility and generator supplies. Activation of an abnormal over frequency condition shall initiate a load transfer to the alternate source or shall inhibit a transfer to a source until its frequency levels are within normal limits. The over frequency sensor shall be user adjustable from 100-130% of nominal and shall be based on a rising (i.e. pick-up) frequency. The over frequency sensor shall be factory set at 115% nominal voltage. The over frequency sensor shall reset (i.e. drop-out) 5% below the pick-up setting and shall be adjustable. The over frequency sensor shall include an adjustable transient time delay feature.

.16 ATS Control Mode: The transfer switch controller shall provide 7 selectable operating modes available from the main operating screen. The following operating modes shall be provided:

.1 Auto: ATS shall operate automatically during a utility power failure

.2 Off: ATS shall not start engine or transfer load during a utility power failure

.3 Manual: ATS can be operated manually to the desired source.

.4 On Load Test: ATS shall be selected to operate in On-Load test mode and permit load transfer.

.5 Off Load Test: ATS shall be selected to operate in Off-Load test mode and shall not permit load transfer.

.6 Timed Test: ATS shall be selected to operate in a Timed test mode.

.7 Closed Transition: ATS shall be selected to operate in a Closed Transition Transfer mode.

.17 Utility Retransfer Operation Selection: The operator interface display shall provide a selection for Utility Re-transfer operation. The utility re-transfer operation shall be user selectable for Automatic, or Manual re-transfer operation. When Manual re-transfer mode is selected, the user can initiate when the re-transfer to utility power shall occur.

.18 Test Modes: The transfer switch controller shall provide the following user selectable test modes and features:

.1 On Load/Off Load: The operator interface shall provide selection of “OFF-LOAD” testing (i.e. load does not transfer to generator) or “ON-LOAD” testing (i.e. load transfers to generator) modes.

.2 Automatic Timed Test Modes: Automatic timed test mode shall be provided to allow for tests to be manually initiated and automatically terminated. Timed test modes shall be user adjustable (0-999 minutes). The load shall automatically re-transfer back to the utility supply should the generator fail on load.

.3 Automatic Gen Exerciser: A calendar based automatic exercise time function shall be provided for generator testing. The Exercise scheduler shall be fully programmable for; start/stop date & time, duration of the test and type of test mode (i.e. On-Load or Off-Load). The exercise timer shall utilize the transfer controller’s internal time clock for referencing all timing functions. The transfer switch shall automatically re-transfer back to the utility supply if the generator set fails during an exercise period.

.19 Controller to include Ethernet Modbus TCP remote communication port or suitable Modbus gateway device.

.20 The Transfer Switch Controller shall be capable of operating in conjunction with other ATS controllers on a common Ethernet Modbus TCP communication network.

.21 All programming/configuring of the transfer switch controller set points including voltage, frequency and time delays shall be software programmable from the front door mounted graphical display screen.

.22 Front panel selector switch with positions for:

.1 Test

.2 Auto

.3 Off

.23 Standard of Acceptance:

.1 ASCO 300 Series Automatic Transfer Switch, 3-pole, 4-wire, solid-neutral with ASCO 5140 Transfer Switch Communication Module.

Part 3 Execution

3.0 INSTALLATION

.1 Installation Location: The transfer switch shall be installed in an environment where the temperature range is within +5° to +122° Fahrenheit (-15° to +50° Celsius) and humidity range not exceeding 5%-95% non-condensing. The transfer switch shall not be installed in a location where it is subjected to direct sunlight on the front of the transfer switch door.

.2 Power Cabling: All power cabling entering/exiting the transfer switch enclosure shall be installed per Technical Specification 26 05 21 Wiring Devices (0-1000V). To ensure satisfactory installation of this equipment, all power cabling connections shall utilize approved lugs and shall be adequately torqued as specified by the ATS manufacturer. All mechanical and electrical connections shall be checked for tightness prior to placing this equipment in service to ensure proper operation and to validate applicable warranty coverage.

.3 Control Wiring: All control wiring for engine start, load shed, alarm and remote test shall be installed per Technical Specification 26 05 21 Wiring Devices (0-1000V).

3.1 FIELD QUALITY CONTROL

.1 Perform tests in accordance with Technical Specification 26 05 10 – Testing and Commissioning.

.2 The automatic transfer switch shall be tested once installed at the project site to confirm proper operation of the system. Schedule and witness testing activities shall be coordinated with the Contract Administrator, site contractor, and owner as required in advance of the testing.

END SECTION

TABLE OF CONTENTS

Part 1 General 2
1.0 Documents 2
1.1 Related Technical Specifications 2
1.2 Regulatory Requirements 2
1.3 Scope 3
1.4 Shop Drawings and Submittals 3
1.5 Delivery, Storage and Handling 3
Part 2 Products 4
1.0 Hazardous Location Fixture 4
2.0 Kiosk Light Fixture 4
2.1 Area Light Fixture 4
2.2 Luminaire Pole 5
Part 3 Execution 5
3.0 Installation 5
3.1 Wiring 5
3.2 Luminaire Alignment 5

Revision History

Rev. No.	Date	Description of Revisions	Prep. By	Rev. By
-	May 29, 2026	Issued for Tender	JB	MS

Part 1 General

1.0 DOCUMENTS

.1 This Technical Specification forms a part of the Contract Documents and is to be read, coordinated, and implemented in conjunction with all other parts.

1.1 RELATED TECHNICAL SPECIFICATIONS

.1 Technical Specification 26 05 00 Common Work Results – Electrical

.2 Technical Specification 26 27 16 Electrical Cabinets and Enclosures

.3 Technical Specification 26 32 13 01 Power Generation – Diesel

1.2 REGULATORY REQUIREMENTS

.1 American National Standards Institute (ANSI)

.1 ANSI C78.374-2015 Light-Emitting Diode Package Specification Sheet for General Illumination Applications

.2 ANSI C78.377-2015 American National Standard for Electric Lamps—Specifications for the Chromaticity of Solid State Lighting (SSL) Products

.2 Illuminating Engineering Society (IES)

.1 IES LM-79-08: Approved Method: Electrical and Photometric Measurements of Solid-State Lighting Products

.2 IES LM-80-15: Approved Method: Measuring Luminous Flux and Color Maintenance of LED Packages, Arrays and Modules

.3 IES LM-82-12: LED Light Engines and LED Lamps for Electrical and Photometric Properties as a Function of Temperature

.4 IES LM-84-14: Approved Method for Measuring Luminous Flux and Color Maintenance of LED Lamps, Light Engines, and Luminaires

.5 IES LM-85-14: Approved Method for Electrical & Photometric Measurements of High Power LEDs

.6 IES TM-21-11: Projecting Long Term Lumen Maintenance of LED Light Sources

.7 IES TM-28-14: Projecting Long-Term Luminous Flux Maintenance of LED Lamps and Luminaires

.8 IES TM-30-15: IES Method for Evaluating Light Source Color Rendition

.3 American National Standards Institute/Institute of Electrical and Electronics Engineers (ANSI/IEEE)

.1 ANSI/IEEE C62.41.1-2002 (R2008), IEEE Guide on the Surge Environment in Low-Voltage (1000 V and less) AC Power Circuits

.2 ANSI/IEEE C62.41.2-2002, IEEE Recommended Practice on Characterization of Surges in Low-Voltage (1000V and Less) AC Power Circuits

.4 Canadian Standards Association (CSA International)

.1 CSA C22.1-15, Canadian Electrical Code, Part 1, 23rd Edition.

.5 ICES-005-2016, Lighting Equipment

.6 National Electrical Manufacturers Association (NEMA)

.1 NEMA SSL 1-2010 Electronic Drivers for LED Devices, Arrays, or Systems

.7 Underwriters' Laboratories of Canada (ULC)

.1 UL 1449 (2014), Standard for Surge Protective Devices

1.3 SCOPE

.1 Materials and installation of lighting.

1.4 SHOP DRAWINGS AND SUBMITTALS

.1 Submit in accordance with Technical Specification 26 05 00 Common Work Results – Electrical.

1.5 DELIVERY, STORAGE AND HANDLING

.1 Deliver, store and handle materials in accordance with Technical Specification 26 05 00 Common Work Results – Electrical.

Part 2 Products

1.0 HAZARDOUS LOCATION FIXTURE

.1 Construction: Copper-free die cast aluminum alloy; thermal shock and impact-resistant borosilicate glass globe; reinforced porcelain socket.

.2 Stainless steel mounting screws and washers.

.3 Hazardous location listed: Class 1, Division 2 – Group IIB

.4 Ceiling or wall mounted.

.5 Lamp: LED; 120V 60Hz

.6 Stainless Steel Wire Guard

.7 Standard of Acceptance: Crouse Hinds LED DLLA2 series or approved equal.

2.0 KIOSK LIGHT FIXTURE

.1 LED, 120V.

.2 100W equivalent.

.3 Mounted to ceiling panel of kiosk.

.4 Include all necessary connectors.

.5 Standard of Acceptance: Stego – Ecoline Light LED 025 or approved equal.

2.1 AREA LIGHT FIXTURE

.1 LED

.2 Tenon-mounted on Type 2 Pole, location as indicated in Contract Drawings.

.3 Power: As indicated in the Contract Drawings.

.4 Lumen Output: 10000

.5 3000K colour temperature.

.6 Include all necessary connectors.

.7 Basis of design: Philips Lumec Roadfocus

2.2 LUMINAIRE POLE

.1 Steel poles: to CSA C22.2 No.206 and per BC MoTI specifications.

.2 Foundations to BC MoTI specifications.

.3 Pole shaft: BC MoTI Type 2

.4 Luminaire arm and antenna pole shaft extension:

.1 Flange: BC MoTI Type 1 flange (top and bottom)

.2 Arm: BC MoTI 2A Arm

.3 Finish: all materials and hardware shall be galvanized steel.

Part 3 Execution

3.0 INSTALLATION

.1 Locate and install luminaires as indicated in Contract Drawings.

3.1 WIRING

.1 Connect luminaires to lighting circuits:

.1 Install flexible or rigid conduit for luminaires as indicated in Contract Drawings.

3.2 LUMINAIRE ALIGNMENT

.1 Align luminaires mounted individually parallel or perpendicular to building grid lines.

END SECTION

TABLE OF CONTENTS

Part 1 General 2
1.0 Documents 2
1.1 Related Technical Specifications 2
1.2 Regulatory Requirements 2
1.3 Scope 2
1.4 Shop Drawings and Submittals 2
1.5 Delivery, Storage and Handling 2
Part 2 Products 2
2.0 Controls 2
2.1 Heaters 3
2.2 Ventilation 3
2.3 Thermostat 4
Part 3 Execution 4
3.0 Installation 4
3.1 Field Quality Control 4

Revision History

Rev. No.	Date	Description of Revisions	Prep. By	Rev. By
-	May 29, 2026	Issued for Tender	JB	MS

Part 1 General

1.0 DOCUMENTS

.1 This Technical Specification forms a part of the Contract Documents and is to be read, coordinated, and implemented in conjunction with all other parts.

1.1 RELATED TECHNICAL SPECIFICATIONS

.1 Technical Specification 26 05 00 - Common Work Results – Electrical

.2 Technical Specification 26 05 10 – Testing and Commissioning

.3 Technical Specification 26 05 31 – Splitters, Junction, Pull Boxes and Cabinets

.4 Technical Specification 26 27 16 – Electrical Cabinets and Enclosures

.5 Technical Specification 26 32 13 01 – Power Generation Diesel

1.2 REGULATORY REQUIREMENTS

.1 Not Used

1.3 SCOPE

.1 Materials and installation for heating and ventilation systems.

1.4 SHOP DRAWINGS AND SUBMITTALS

.1 Submit in accordance with Technical Specification 26 05 00 Common Work Results – Electrical.

1.5 DELIVERY, STORAGE AND HANDLING

.1 Deliver, store and handle materials in accordance with Technical Specification 26 05 00 Common Work Results – Electrical.

Part 2 Products

2.0 CONTROLS

.1 Refer to electrical Contract Drawings for details on heating and ventilation control.

.2 Provide control equipment as shown on electrical Contract Drawings. Devices to be industrial quality, line voltage (120/240 volts), single-pole, white unless otherwise indicated on the Contract Drawings.

.3 Provide clear plastic thermostat guard for all heating/cooling wiring devices: thermostats, astronomical time switch.

2.1 HEATERS

.1 Element: Durable tubular heating element with fins.

.2 Finish: Epoxy-polyester powdercoat

.3 Installation: Wall mounted with surface mounting box (included)

.4 Wattage & Voltage: As indicated on Contract Drawings

.5 Control: Built-in thermostat with control knob.

.6 Heaters shall be serviceable and replaceable without removing any component in the kiosk or area. Heaters shall be located to prevent burning of adjacent components.

.7 Heaters shall be suitably shielded to prevent accidental burning.

.8 There shall be no exposed electrical parts.

.9 Standard of Acceptance: Ouellet OVS Series or approved equal.

2.2 VENTILATION

.1 Kiosk Ventilation

.1 Ventilating louvers shall be vermin, insect and rainproof with easily replaceable fiberglass, non-circular automotive type filters.

.2 Ventilation louvres shall be adequately sized and die punched.

.3 The controls compartment of the kiosk shall be equipped with one or more 120VAC exhaust fans. The number of fans and louvers will vary according to the kiosk size, prevailing temperature conditions and kiosk equipment heat load.

.4 Electrical connections shall be by two insulated spade connectors.

.5 There shall be no exposed electrical parts.

.6 Fans shall be covered with a protective guard.

.7 Fans shall be serviceable and replaceable without having to remove any other component in the kiosk.

.2 Wet Well Ventilation Fan

.1 A variable speed explosion-proof exhaust fan with high and low speed switch (with VFD Program Module) must be used which will be running constantly at low speed, which has sufficient capacity to exchange the total volume of air inside the well at least 6 times an hour with means for detecting failure. At high speed, the fan must purge noxious fumes while maintenance personnel are in the wet well, per Work Safe BC Confined Space regulations.

.2 Rating: As indicated on Contract Drawings.

.3 Hazardous location classification: Class 1 Div. 2

.4 Motor: Explosion proof construction

.5 Fan guard

.6 Horizontal mounting

.7 Refer to Mechanical Specifications.

2.3 THERMOSTAT

.1 Kiosks or enclosures shall be equipped with one or more 120/240VAC thermostats as indicated in the Contract Drawings.

.2 Thermostats shall be serviceable and replaceable without removing any component in the kiosk.

.3 There shall be no exposed electrical parts.

.4 Control of heater shall be from a thermostat integral to heater enclosure.

.5 Control of fan shall be from a wall-mount thermostat.

Part 3 Execution

3.0 INSTALLATION

.1 Mount heaters on kiosk wall as indicated on Contract Drawings.

.2 Electrically connect ventilation as shown in manufacturer's installation instructions.

.3 Install control equipment in locations indicated on Contract Drawings.

.4 Install heat trace equipment in water compartment of electrical kiosk.

.5 Make power and control connections.

3.1 FIELD QUALITY CONTROL

.1 Perform tests in accordance with Technical Specification 26 05 10 – Testing and Commissioning.

.2 Ensure that heaters, ventilation and controls operate correctly.

END SECTION

1.0 GENERAL

The unit price or lump sum price bid for each item shall be full compensation for all labour, equipment and materials incidental and necessary to complete the supply, installation and construction of each item as specified herein and as indicated on the Drawings and other Contract Documents, either directly or by implication, and any and all other incidental items. In all cases where utilities and services are constructed outside of areas where new surface works are designated, reinstatement including restoration of existing surfaces shall be considered incidental to the bid price for the respective utility or service.

The descriptions of work to be done under the Schedule of Quantities and Prices as listed herein are general descriptions of the Work only in order to break down and assess the Total Tender Price. These descriptions are not intended to include all details of all requirements and responsibilities of the Contractor to complete the Work in accordance with the Contract. It is the Tenderer's responsibility to ensure that the Total Tender Price submitted with its Tender is sufficient to complete all of the Work based upon the whole of the Contract Documents, without reservation.

DIVISION 26 – ELECTRICAL PAYMENT ITEM DESCRIPTIONS

Div 26 - Electrical		
26 – 1.1	LS	**Coordinate Power Supply to Site**
26 – 1.2	LS	**Hydro and Communication Conduits**
26 – 1.3	LS	**Electrical Kiosk Supply, Installation, and Commissioning**
26 – 1.4	LS	**Generator Supply, Installation, and Commissioning**
26 – 1.5	LS	**Wet Well Electrical**
26 – 1.6	LS	**Miscellaneous Electrical for Valve Chamber and Street Light**
26 – 1.7	LS	**SCADA Programming Coordination**

1.1 Power Supply to Site

The lump sum price bid for this item shall be full compensation for all work necessary and incidental to coordinate BC Hydro bringing power to the site.

Construction of all electrical ducting and appurtenances for power supply to the site, including shop drawings, submissions, co-ordination with BC Hydro, supply and installation of new BC Hydro 347/600V 3 Phase, 100A service, including service disconnect and meter socket, trenching and backfilling for underground electrical duct work, and supply and installation of underground electrical conduits and all labour, material and equipment necessary to complete the work. Refer to Technical Specifications and Drawings of the Contract Documents for detailed requirements.

Payment: Lump sum bid.
Measurement: Paid per percentage of work completed as agreed by the Contract Administrator.

1.2 Hydro and Communication Conduits

The lump sum price bid for this item shall be full compensation for all work necessary and incidental for supply and installation of hydro and communication conduits associated with the site facilities and services.

Construction of all electrical ducting and appurtenances of the project, including shop drawings, submissions, co-ordination with BC Hydro, and all labour, material and equipment necessary to complete the work. Refer to Technical Specifications and Drawings of the Contract Documents for detailed requirements.

Payment: Lump sum bid.
Measurement: Paid per percentage of work completed as agreed by the Contract Administrator.

1.3 Electrical Kiosk Supply, Installation, and Commissioning

The lump sum price bid for this item shall be full compensation for all work necessary and incidental for supply, installation, testing and commission of the electrical kiosk associated with the site facilities and services.

Construction of all electrical works and appurtenances for the electrical kiosk, including shop drawings, submissions, and all labour, material and equipment necessary to complete the work. Refer to Technical Specifications and Drawings of the Contract Documents for detailed requirements.

Payment: Lump sum bid.
Measurement: Paid per percentage of work completed as agreed by the Contract Administrator.

1.4 Generator Supply, Installation, and Commissioning

The lump sum price bid for this item shall be full compensation for all work necessary and incidental for supply, installation, testing and commissioning of the generator associated with the site facilities and services.

Construction of all electrical works and appurtenances for the generator, including shop drawings, submissions, and all labour, material and equipment necessary to complete the work. Refer to Technical Specifications and Drawings of the Contract Documents for detailed requirements.

Payment: Lump sum bid.
Measurement: Paid per percentage of work completed as agreed by the Contract Administrator

1.5 Wet Well Electrical

The lump sum price bid for this item shall be full compensation for all work necessary and incidental for electrical ducting and appurtenances for the wet well electrical associated with the site facilities and services.

Construction of all electrical ducting, wiring, and appurtenances for the wet well electrical, including shop drawings, submissions, and all labour, material and equipment necessary to complete the work. Refer to Technical Specifications and Drawings of the Contract Documents for detailed requirements.

Payment: Lump sum bid.
Measurement: Paid per percentage of work completed as agreed by the Contract Administrator.

1.6 Miscellaneous Electrical for Valve Chamber and Street Light

The lump sum price bid for this item shall be full compensation for all work necessary and incidental for miscellaneous electrical works for the valve chamber and street light associated with the site facilities and services.

Construction of all electrical ducting, wiring, and appurtenances for the valve chamber and street light, and all other electrical works not covered elsewhere, including shop drawings, submissions, and all labour, material and equipment necessary to complete the work. Refer to Technical Specifications and Drawings of the Contract Documents for detailed requirements.

Payment: Lump Sum bid.
Measurement: Paid per percentage of work completed as agreed by the Contract Administrator.

1.7 SCADA Programming Coordination

The lump sum price bid for this item shall be full compensation for all work necessary and incidental to coordinate SCADA programming. SCADA programming is to be completed by PBX under direction and paid for by the Owner. Contractor to be responsible for coordination with the SCADA programmer.

The Owner will be responsible for start-up of the PLC and the aspects of the Delem Drive Pump Station operation which involve PLC control. During the period that the Owner is carrying out the PLC testing and start-up procedures, the Contractor shall ensure that qualified representatives of the mechanical and electrical trades are on site and able to correct deficiencies, make adjustments, and assist in start-up procedures as required. Attendance and participation of these trades in the start-up procedures shall be at the Contractor's cost.

Payment: Lump sum bid.
Measurement: Paid per percentage of work completed as agreed by the Contract Administrator.

1.5	**Measurement and Payment**	.2S	Delete text in Clause 1.5.2 and replace with: Payment for **Removable Bollards** will be made for each bollard. Payment includes supply of all materials and complete installation as shown on Contract Drawings.

END OF SECTION

1.9 Measurement and Payment

.4S ***(Add clause 1.9.4S)***

Payment for concrete bases will be made at the unit price per specified pole base type shown in the Tender Form. The price shall include the supply and installation of all above, equipment, materials, including excavation, bedding, backfill, anchor bolts, installation of concrete base, and all work incidental thereto.

.5S ***(Add clause 1.9.5S)***

Payment for junction boxes will be made at the unit price see box type specified in the Tender Form. The price shall include materials, installation, and work incidental thereto.

.6S ***(Add clause 1.9.6S)***

Payment for conduit and wiring will be made at the unit prices per linear metre shown in the Tender Form. Measurement will be made longitudinally along the road and transversely across the road of conduit and wiring runs (feeders). The price shall include; trench excavation, bedding and backfill, all above, equipment, conduit, installation of feeder, wiring as specified, warning tape, and all work incidental thereto.

.7S ***(Add clause 1.9.7S)***

Payment for poles, luminaires and bases will be made at the unit price per specified pole and luminaire type shown in the Tender Form. The price shall include materials, assembly, installation of the assembly and all work incidental thereto.

.8S ***(Add clause 1.9.8S)***

Payment for detector loops will be made at the unit price shown in the Tender Form. The price shall include the supply and installation of materials, labour, equipment, loop leads, joint sealing, and all work incidental thereto.

.9S ***(Add clause 1.9.9S)***

Payment for the supply and installation of traffic signal and signage modification/additions will be made at a lump sum basis or unit rates for each location as shown on the Tender Form.

The price shall include the supply and installation of all equipment, labour, materials and work incidental thereto in accordance with the specifications and drawings.

END OF SECTION

City of Langford

Delem Drive Sanitary Pumpstation and Intersection Upgrade

NRFP CON26-0191

ADDITIONAL DOCUMENTS

colquitz engineering

Appendix A

WSP Geotechnical Reports (A1, A2, A3, A4 and A5)

WEST SHORE ENVIRONMENTAL SERVICES LP

SOOKE ROAD SITE CHARACTERIZATION

GEOTECHNICAL REPORT

Draft for Review

AUGUST 23, 2024



SOOKE ROAD SITE CHARACTERIZATION

GEOTECHNICAL REPORT

WEST SHORE ENVIRONMENTAL SERVICES LP

DRAFT

PROJECT NO.: CA0024295.3529
DATE: AUGUST 23, 2024

WSP
SUITE 301
3600 UPTOWN BOULEVARD
VICTORIA, BC, CANADA V8Z 0B9

T: +1 250 384-5510
F: +1 250 386-2844
WSP.COM

Draft for Client Review

August 23, 2024

WEST SHORE ENVIRONMENTAL SERVICES LP
Unit 103, 859 Orono Avenue
Victoria, BC V9B 2T9

Attention: Ms. Catherine Laurie, A. ScT.

Dear Madam,

Subject: Sooke Road Geotechnical Site Characterization

WSP Canada Inc. (WSP) was engaged by the West Shore Environmental Services LP (WSES) to provide geotechnical engineering services for the proposed sewer extension along Sooke Road between West Shore Parkway and the Center Mountain Business Park (Delem Drive) in accordance with our geotechnical proposal dated 15 February 2024 (WSP Proposal 2023CA113529). Authorization to proceed was given by Darrin Stephanson via the purchase order #P92-5042-100509 dated 28 February 2024.

This report summarizes our geotechnical site assessment and provides preliminary geotechnical discussion and recommendations for the proposed options for the sewer extension. This report is issued for client review.

Yours sincerely,

Don Kaluza, P.Eng.
Senior Principal Engineer

WSP ref.: CA0024295.3529

Draft for Client Review

Suite 301
3600 Uptown Boulevard
Victoria, BC, Canada V8Z 0B9

T: +1 250 384-5510
F: +1 250 386-2844
wsp.com

REVISION HISTORY

FIRST ISSUE

August 23, 2024	Draft for Client Review			
Prepared by	Reviewed by	Approved By		
Don Kaluza, P. Eng	<reviewer, title>	<approver, title>		
REVISION 1				
<Date>	<Remarks>			
Prepared by	Reviewed by	Approved By		
REVISION 2				
<Date>	<Remarks>			
Prepared by	Reviewed by	Approved By		

Draft for Client Review

SIGNATURES

PREPARED BY

Don Kaluza, P. Eng.
Senior Principal Geotechnical Engineer

Date

REVIEWED BY

Carl Miller, M.Sc., P. Eng.
Senior Principal Geotechnical Engineer

Date

Draft for Client Review

WSP Canada Inc. prepared this report solely for the use of the intended recipient, WEST SHORE ENVIRONMENTAL SERVICES LP, in accordance with the professional services agreement. The intended recipient is solely responsible for the disclosure of any information contained in this report. The content and opinions contained in the present report are based on the observations and/or information available to WSP Canada Inc. at the time of preparation. If a third party makes use of, relies on, or makes decisions in accordance with this report, said third party is solely responsible for such use, reliance or decisions. WSP Canada Inc. does not accept responsibility for damages, if any, suffered by any third party as a result of decisions made or actions taken by said third party based on this report. This limitations statement is considered an integral part of this report.

The original of this digital file will be conserved by WSP Canada Inc. for a period of not less than 10 years. As the digital file transmitted to the intended recipient is no longer under the control of WSP Canada Inc., its integrity cannot be assured. As such, WSP Canada Inc. does not guarantee any modifications made to this digital file subsequent to its transmission to the intended recipient.

TABLE OF CONTENTS

1 INTRODUCTION 1

1.1 Scope of Work 1

2 BACKGROUND INFORMATION 2

2.1 General 2

2.2 Site Description 2

3 ASSESSMENT WORK 4

3.1 Summary of Field Work 4

3.2 Subsurface Stratigraphy 5

3.3 Groundwater Measurements 5

3.4 In Situ Testing 5

3.5 Laboratory Testing 6

3.6 Extensometer Readings 8

3.7 Discussions on Peat 8

3.7.1 General 8

3.7.2 Consolidation and Settlement 8

4 GEOTECHNICAL DISCUSSION AND RECOMMENDATIONS 11

4.1 General 11

4.2 Relocate the sewer 12

4.3 Remove and replace peat 12

4.4 Force Main 13

4.5 PiLe supported Pipe 13

4.6 Additional Preload to the Peat 14

4.7 Summary of Options 14

5 FUTURE GEOTECHNICAL WORK 16

6 CLOSING 17

Draft For Client Review

TABLES

TABLE 3.1	DRILLING SCHEDULE	4
TABLE 3.2	IN SITU VANE SHEAR TEST RESULT	6
TABLE 3.3	ATTERBERG LIMITS	6
TABLE 3.4	WATER CONTENT DETERMINATIONS, THICKNESS AND DEPTH FOR PEAT	7
TABLE 3.5	PRE-CONSOLIDTION STRESS ESTIMATION	7
TABLE 3.6	EXTENSOMETER READINGS	8
TABLE 4.1	SUMMARY OF PROS AND CONS FOR SEWER OPTIONS	14

APPENDICES

A BOREHOLE LOCATION PLAN

B SITE PHOTOS

C BOREHOLE LOGS

D SONIC CORE PHOTOS

E TABLE OF MEASURED SHEAR STRENGTHS

F LAB TESTING

Draft for Client Review

1 INTRODUCTION

1.1 SCOPE OF WORK

WSP Canada Inc. (WSP) was originally contracted by West Shore Environmental Services LP (WSES) to carry out a peer review of geotechnical work that was completed by Ryzuk Geotechnical (Ryzuk) on this project. WSP informed Ryzuk via email on August 3, 2023 of our intent to review documents related to the proposed sewer, which included documents for the proposed Central Mountain Business Park that is to be access off of Delem Drive. Our peer review report dated August 14, 2023 included a recommendation to complete a site characterization of the proposed sewer alignment to get a better understanding of the subsurface conditions and to inform the design of the sewer line.

Subsequent to issuance of our August 14, 2023 report, WSES requested WSP to prepare a scope of work to characterize the propose sewer alignment. The scope of geotechnical work for the project was set out in our 15 February 2024 proposal, and comprised:

- Complete a desktop review;
- Gather and review existing reports and information including data on the existing pre-load along the alignment, if available;
- Expand on the recent peer review of the geotechnical aspects of the work that has been completed to date;
- Characterize the site conditions along the sewer alignment by drilling and sampling along the proposed sewer alignment. Proposed drilling depths were based on historical information by WSP and others;
- Carry out a laboratory testing program to provide information on the consolidation and compression properties of the peat and underlying soils and determine settlement information;
- Based on the characterization and laboratory program, recommend a mitigation strategy and preferred method(s) of construction; and
- Possible other geotechnical solutions or recommendations relating to sewer construction.

WSP's desktop review was completed under separate cover. This document represents the geotechnical characterization part of our scope. WSP understands that we will be further contracted to advance the design upon selection of the preferred option that is discussed as part of this document.

Draft for Client Review

2 BACKGROUND INFORMATION

2.1 GENERAL

A sanitary sewer is proposed to be located between the Central Mountain Business Park from Delem Drive to the West Shore Parkway. WSP understands that Ryzuk Geotechnical had provided geotechnical guidance on the project and Gwaii Engineering Ltd. (GEL) has provided Issued for Approval drawings for the proposed sewer and road alignment. Issued for Approval drawings (dated 3 Nov 2022) prepared by GEL indicate that the proposed 300 mm PVC gravity sanitary sewer will be approximately 700m in length, located in the shoulder of the east bound lane of Sooke Road, and have a gradient that ranges from 0.4% to 0.56%.

The pipe, which is to be installed in 4m lengths, shall not have ponding of more than 10% of the pipe diameter. The maximum settlement at each joint, or along the pipe length is 30 mm. There are no seismic performance criteria given to this sewer line.

WSP understands that the proposed sewer alignment must be located on the south side of Sooke Road. Preliminary design information provided by Ryzuk Geotechnical had the sewer line supported on steel pipe piles with a continuous pile cap.

Additional background information is presented in the following reports prepared by WSP:

1. *Sooke Road Site Characterization - Review of Background Information* dated July 09, 2024; and
2. *Desktop Reviews for Sooke Road Sewer Extension* dated August 14, 2023.

2.2 SITE DESCRIPTION

In general, the proposed alignment passes through known peat deposits, silts, clays, sand and gravels, and outcropping bedrock, as referenced on the Quaternary Geology Map of Greater Victoria[1].

The proposed sewer alignment is to be located mainly within the south shoulder of Sooke Road. Sooke Road has a gradual surface gradient with an approximate elevation of 67.5m near Delem Drive and about 66.5m near the West Shore Parkway. Approximately 250m of the sewer alignment is to be located within a proposed acceleration lane that leads east from Delem Drive. The acceleration lane and the entrance to Delem Drive was preloaded with rock fill and monitored for settlement by Ryzuk Geotechnical. The preload was about 1m above the elevation of the adjacent Sooke Road and was left in place for approximately 1 year. At the time of our assessment, rockfill was exposed at the surface in the proposed acceleration lane and was generally level with the edge of pavement. The rockfill sloped down to the south towards a low-lying peat bog area. Brush and small trees lined the toe of the rockfill.

The shoulder was asphalt surfaced from the south fog line of Sooke Road to a gravel surfaced area. East of the proposed acceleration lane the gravel shoulder was narrow and sloped down to a ditch. A bus stop that includes a small shelter on a concrete island was located about 160m west of the West Shore Parkway. An existing arch culvert passes beneath Sooke Road immediately east of the bus stop. The shoulder of the road narrows with a steeper side slope between the bus stop and the West Shore Parkway.

[1] Ministry of Energy and Mines - Monahan, Patrick A., and Levson, Victor M. "Quaternary Geological Map of Greater Victoria", Trim Sheets (92B.043, 044, 053 & 054), Geoscience Map 2000-2.

Draft for Client Review

The north side of Sooke Road was not observed in detail by WSP as part of this assignment since the sewer is mainly proposed for the south side of the road. However, it is noted that an overhead powerline runs parallel to Sooke Road, north of the north road shoulder. At the east end of the proposed sewer alignment, the sewer will ultimately cross Sooke Road to the north side of the road where it will eventually connect to an existing gravity sewer on the east side of the West Shore Parkway. The proposed sewer will pass beneath cables that connect to a signal kiosk and an area of cellular concrete that was used as part of lightweight backfill for the Finney Road sewer project.

WSP's review of maps provided by utility providers noted that neither Fortis BC gas line nor Telus communication lines were located within the proposed sewer alignment. The closest facilities of Fortis BC and Telus are located on West Shore Parkway, north of Sooke Road.

Draft for Client Review

3 ASSESSMENT WORK

3.1 SUMMARY OF FIELD WORK

A sonic drill was utilized to advance seven boreholes (BH24-01 through BH24-07) along the proposed sewer alignment. The sonic drill was operated by Drillwell Enterprises Ltd. of Duncan, BC. Prior to drilling, WSP visited the site on 15 April 2024 to mark out the proposed borehole locations and escorted the private utility locator (GeoScan) to clear each area of known buried utilities.

WSP conducted a subsurface site investigation from 22 April to 3 May 2024 during which time the seven boreholes were advanced along the proposed sewer alignment on the road shoulder of the eastbound lane of Sooke Road. The boreholes were spaced approximately 100 meters apart along Sooke Road between West Shore Parkway and Delem Drive.

To achieve a sufficient set back distance (a minimum of 6 meters) between the drill crew and highway traffic, and to meet the requirement of lane closure restrictions of Sooke Road (Highway 14), boreholes were drilled in a combination of day shifts and night shifts. Traffic control services were utilized during night shift, and drilling of BH24-01 during the day which was located near the intersection of Delem Drive and Sooke Road. A borehole location plan is included in Appendix A.

The schedule of borehole drilling along with drilling depths is shown in the table below:

Table 3.1 Drilling Schedule

BOREHOLE	FINAL DEPTH (m)	DRILLING DATE AND TIME
SBH24-01	25.66	April 22, 2024 08:00 to 17:00
SBH24-02 (with extensometer install)	25.91	April 23, 2024 08:00 to 17:50 April 24, 2024 08:00 to 14:00
SBH24-03	27.43	April 24, 2024 14:00 to 17:15 April 25, 2024 8:00 to 16:30
SBH24-04 (with extensometer install)	35.05	April 25, 2024 16:30 to 18:00; April 26, 2024 08:00 to 17:00; April 29, 2024 08:00 to 17:00
SBH24-05	35.05	April 30, 2024 08:00 to 18:45
SBH24-06	35.81	May 1, 2024 19:00 to May 2 05:45
SBH24-07	23.93	May 2, 2024 19:00 to May 3 04:15

Photos of drill rig set up at each borehole location and general site photos are included in Appendix B.

Draft for Client Review

3.2 SUBSURFACE STRATIGRAPHY

Borehole logs are included in Appendix C and a summary of the ground conditions is provided below. Soils descriptions are generally in accordance with the description methodology set out in the Unified Soil Classification System (ASTM) D2487 and D2488, and the Canadian Foundation Engineering Manual (CFEM), 5th edition. In general, the ground conditions typically comprised:

- Asphalt and/or sandy gravel fill with cobbles and boulders (1.5m to 5.5m bgl); over
- Peat (1.8m to 8.3m bgl); over
- Clay with layers of silt/sand (5.5m to 35.0m bgl); over
- Inferred bedrock or very dense gravelly sand (Till-like).

Representative disturbed samples were collected at regular intervals and returned to our Victoria laboratory for visual review and further laboratory testing. During drilling, multiple attempts to obtain Shelby tube samples were made when encountering the soft clay immediately below the peat interface. However, the sampling actions were unsuccessful with little to no recovery, as the clay was too soft and wet to be retained in the sampler. Two Shelby tube samples were successfully collected from slightly deeper depths from BH24-03 between 6.1m to 6.8m and from BH24-04 between 7.6m to 8.3m.

Cross-sections of the inferred ground conditions are presented in Appendix A. Photos taken during drilling were included in Appendix D.

3.3 GROUNDWATER MEASUREMENTS

Groundwater monitoring wells were not installed as part of this program. However, historical measurements indicate that groundwater levels may be 1.4m to 2.0m below the natural peat surface. Observations made during the drilling program indicated that groundwater was about 3.4m below the fill surface, or about 1.2m below the fill/peat interface.

3.4 IN SITU TESTING

In situ vane shear tests were performed during drilling when encountering peat or soft clay at vertical intervals of every 2 to 3 meters. Both peak and residual undrained shear strength were measured. Results of the in-situ vane shear tests are presented in the table below and shown on the borehole logs in Appendix B.

Based on the in-situ results, the peak undrained shear strength in the peat ranged from about 22 kPa to 73 kPa; the peak undrained shear strength in clay ranged from 11 kPa to 76 kPa. The following table provides uncorrected average peak in-situ shear strengths for the peat and clay soils for a range of elevations[2]. A full table of all the measured field vane values is included in Appendix E.

Draft for Client Review

[2] Elevations estimated from Issued for Approval drawings (dated 3 Nov 2022) prepared by Gwaii Engineering Ltd.

Table 3.2 In Situ Vane Shear Test Result

ELEVATION (m)	GENERAL STRATIGRAPHY	AVERAGE PEAK UNDRAIN SHEAR STRENGTH (kPa)	AVERAGE RESIDUAL UNDRAIN SHEAR STRENGTH (kPa)
60 – 64	Peat	42	22
57 – 60	Clay	42	16
54 – 57	Clay	22	10
51 - 53	Clay	23	14
48 – 50	Clay	23	11
45 – 47	Clay	27	15
42 – 44	Clay	41	18
39 - 41	Clay	53	15
36 - 38	Clay	53	21

3.5 LABORATORY TESTING

Classification testing was performed on selected samples in our Victoria laboratory. Moisture content determination was performed on all recovered samples in accordance with ASTM D2216-19. Atterberg limit testing was performed on 16 selected samples of fine-grained soil and the results are summarized in the following table. The lab testing results are presented on the borehole log in Appendix C and the graphical results are included in Appendix F.

Table 3.3 Atterberg Limits

BOREHOLE	DEPTH (m)	MOISTURE CONTENT (%)	LL (%)	PL (%)	PI	CLASSIFICATION*
BH24-01	8.2 – 8.5	45.2	35	16	19	CL
BH24-02	7.2 – 7.3	46.5	35	16	19	CL
BH24-02	11.0 – 11.1	25.0	23	19	4	CL-ML
BH24-02	16.5 – 16.6	36.8	33	16	17	CL
BH24-03**	6.1 – 6.8	48.8	30	19	11	CL
BH24-03	10.4 – 10.5	43.5	36	17	19	CL
BH24-03	16.2 – 16.3	47.7	38	17	21	CL
BH24-03	25.3 – 25.5	24.4	23	16	7	CL-ML
BH24-04**	7.6 – 8.2	38.8	32	19	13	CL
BH24-04	10.1 – 10.2	27.4	25	20	5	CL-ML
BH24-04	11.4 – 11.6	41.8	37	17	20	CL
BH24-04	16.2 – 16.3	35.5	33	17	16	CL

Revised for Client Review

BOREHOLE	DEPTH (m)	MOISTURE CONTENT (%)	LL (%)	PL (%)	PI	CLASSIFICATION*
BH24-04	21.0 – 21.2	36.2	36	17	19	CL
BH24-05	7.0 – 7.2	31.3	24	14	10	CL
BH24-06	8.7 – 8.8	47.8	36	17	19	CL
BH24-07	8.7 – 8.845	40.7	38	17	21	CL

*Unified Soil Classification System
**Testing performed by Thurber Engineering Ltd.

Moisture content determinations were made for all the recovered samples. The average moisture content for encountered peat along with thickness and depth to the bottom of the peat in each borehole is presented in Table 3.4, below.

Table 3.4 Water Content Determinations, Thickness and Depth for Peat

BOREHOLE	APPROX. THICKNESS (m)	DEPTH FROM SURFACE TO BOTTOM OF PEAT	AVERAGE MOISTURE CONTENT (%)
BH24-01	6.1	7.9	210
BH24-02	4.6	6.7	298
BH24-03	3.9	6.0	303
BH24-04	3.3	7.5	270
BH24-05	2.1	6.1	341
BH24-06	3.0	7.9	275
BH24-07	2.8	8.3	260

One dimensional consolidation tests were performed on the Shelby tube samples taken from at BH24-03 between 6.1m to 6.8m and BH24-04 between 7.6m to 8.3m. Estimates of pre-consolidation pressure and effective overburden stress are shown in Table 3.5, below.

Table 3.5 Pre-Consolidtion Stress Estimation

BOREHOLE	DEPTH (m)	PRE-CONSOLIDATION STRESS*(kPa)	PRE-CONSOLIDATION STRESS**(kPa)	EFFECTIVE OVERBURDEN STRESS***(kPa)
BH24-03	6.1-6.8	38	45	55
BH24-04	7.6-8.3	53	65	73

* Pacheco Silva Method
** Casagrande Method
***Based on estimated unit weights from borehole logs and groundwater depth

Draft for Client Review

3.6 EXTENSOMETER READINGS

Measurements of vertical displacement were taken from the extensometers that were installed into BH24-02 and BH24-04. The results are summarized in the following table.

Table 3.6 Extensometer Readings

DATE	BH24-02			BH24-04		
	Upper Magnet	Lower Magnet	Datum Magnet	Upper Magnet	Lower Magnet	Datum Magnet
14 May 2024	2.052	6.629	24.817	4.143	7.300	N/A*
5 July 2024	2.052	6.628	24.816	4.144	7.301	N/A*
6 August 2024	2.052	6.626	24.817	4.141	7.300	N/A*

*N/A: extensometer tape is limited to 30m and could not reach bottom magnet.

3.7 DISCUSSIONS ON PEAT

3.7.1 GENERAL

Peat is generally considered to fall into three main groups for engineering purposes: amorphous-granular peat, (i.e. well decayed peat), fine fibrous peat, and course fibrous peat. Based on our site and laboratory observations, the peat falls into the fine fibrous peat category. In terms of the "Von Post" Classification system, the peat falls within the categories of H5 to H7, as described below.

H5: Moderately decomposed or muddy peat. Growth structure evident but slightly obliterated. Some amorphous peat substance passes through the fingers when pressed but mostly muddy water. The pressed residue is very thick.

H7: Fairly well decomposed or markedly muddy peat but the growth structure can just be seen. When pressed about half the peat substance passes through the fingers. If water is also released this is dark and peaty.

3.7.2 CONSOLIDATION AND SETTLEMENT

Consolidation and settlement of a peat can be seen to follow two main phases, "primary consolidation" and "secondary compression" as shown on the typical time vs settlement graph in the Figure[3] below.

Draft for Client Review

[3] The Muskeg Handbook, National Research Council of Canada, Chapter 6.

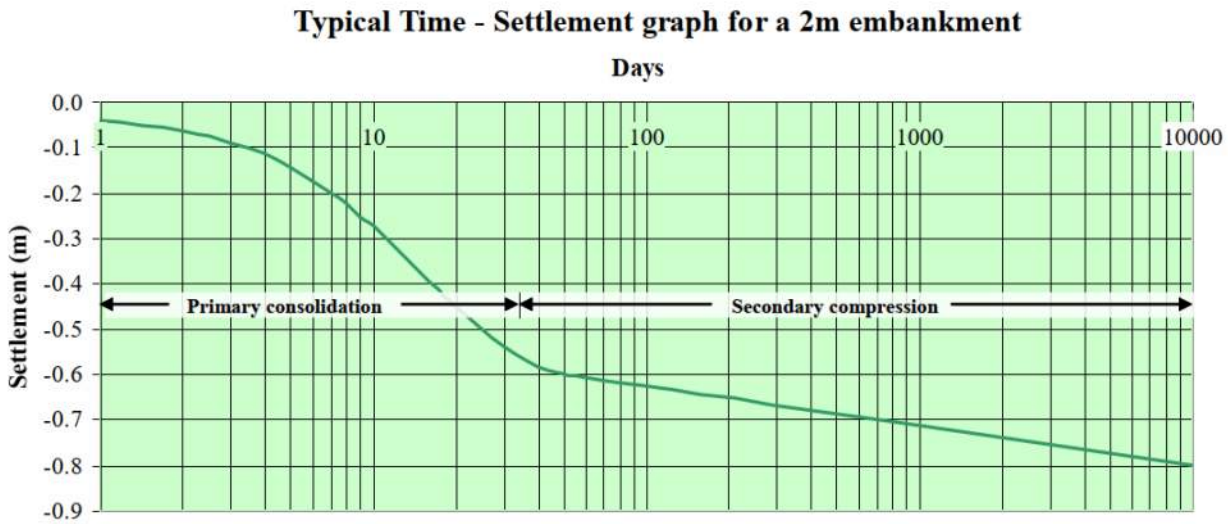

Note: The graph above is given as an indication of what can happen to a typical floating road constructed on peat and should not be taken as a standard or scaled from.

3.7.2.1 *PRIMARY CONSOLIDATION*

Peat in its natural state is a highly permeable material and the magnitude of the initial primary consolidation settlement under load is normally fairly large and the period of settlement short. During this primary phase the new load is jointly supported by the free water within the peat and the peat vegetal mass. As the vegetal structure takes up the load it compresses, and strengthens, and causes load to be transferred back into the free water increasing the pore water pressures locally. This pressure in turn releases into the adjacent unloaded peat causing load to be taken up again by peat vegetal structure with further settlement, strength improvement and load transfer.

Primary consolidation process generally takes place within the time it takes to place granular fill materials and its magnitude is usually dependent on the weight of the fill and the thickness of the peat deposit and any other compressible layers. Once the phase has passed, and the primary excess water pressures have dissipated, the settlement under load continues at a much slower "secondary compression" rate which is generally accepted to be linear with the logarithm of time.

3.7.2.2 *SECONDARY COMPRESSION*

In the secondary compression phase the load on the peat continues to transfer from the water within the peat to the internal peat skeleton as the peat continues to respond to the applied load. This is generally accepted to be the result of the loaded plant fragments within the peat mass slipping and re-organising to form a denser matrix. As these peat fragments come together, and the pore voids close, the permeability through the peat reduces in response.

This simple two phase "primary consolidation" and "secondary compression" scenario gives an indication of the continuous dynamic consolidation process within the loaded peat mass. The amount of primary consolidation that is incurred at a location will vary with type of peat, but it can be generally approximated to around 50 per cent of the total settlement over time. For the purposes of design, secondary compression is normally accepted to take place over a period of 30 years.

Draft for Client Re

3.7.2.3 *ESTIMATING SECONDARY COMPRESSION*

Estimates of secondary compression[4] of peat can be carried out using moisture content, thickness, time for primary consolidation, and duration to completion, which is typically 30 years as described above. For most of the proposed sewer alignment that lays beneath the existing Sooke Road embankment, the majority of secondary compression should have taken place. This assumes that the current road prism has been in place for 30+ years. WSP is currently reviewing this calculation to account for the preload that was monitored by Ryzuk, but for the new stretch of sewer alignment that lays beneath Delem Drive and the proposed acceleration lane, secondary compression settlement of the peat could range from about 250 mm to 450 mm over the next 30 years.

Draft for Client Review

[4] G. Mesri, T.D. Stark, M.A. Ajlouni, " Secondary Compression of Peat With or Without Preloading", Journal of Geoenvironmental Engineering, May 1997

4 GEOTECHNICAL DISCUSSION AND RECOMMENDATIONS

4.1 GENERAL

The current alignment of the proposed gravity sewer line is to be located on the southside of Sooke Road and will pass beneath a proposed acceleration lane, close to the existing edge of pavement of Sooke Road, through an existing bus stop, below an existing arch culvert and across Sooke Road near the intersection of the Westshore Parkway. With the proposed sewer to be installed to depths ranging from about 2m to 4m, the sewer will mostly be located within the existing granular road fill that is atop the peat, or close to the interface of the fill and underlying peat. The gravity line has a very gentle grade of 0.4% to 0.56% that will be negatively impacted by total and/or differential settlements within the peat and/or underlying clay deposits. Given the differences in loading history of the peat related to the proposed acceleration lane, it is considered highly likely that the alignment will experience differential settlements beyond the maintenance tolerances of the sewer as described above, as a result of long term secondary compression in the peat. As described further below, this could be accommodated into a "managed solution" of increased maintenance or potentially mitigated through one of several alternative design options. It is noted that while the Ryzuk option of pile supporting the sewer with a continuous grade may have merit with respect to addressing differential settlements for the sewer, it is an approach that could introduce differential settlements into the highway/acceleration lane with potential drainage and safety implications.

The extensometer readings that were taken from BH24-02 and BH24-04 in the proposed acceleration suggest that primary consolidation settlement is complete for the peat and clay under the current load and position of the watertable. The consolidation test results indicate that the clay is loaded to, or very close to, the pre-consolidation pressure of the deposit. The combination of settlement sensitive sewer and soft ground conditions make for a challenging and complex site in that there are compressible peat and clay soil that will react to load, change in groundwater, and long-term secondary compression of the peat. Additional items that add to its complexity is that part of the alignment is located within fill areas that have consolidated under many years and part that will continue to settle for many years to come.

Conventional grade supported sewer construction would be done by excavating through the existing fill material, placing the sewer (possibly with some form of geofabric separator), and then backfilling with similar materials of the same or lighter density to avoid additional load being put on the underlying peat and clay soils. Any increase in load will induce primary consolidation of the clay and primary consolidation of the peat. Secondary compression of the peat would occur largely independent of load.

Where the sewer installation depth is deep (greater than +/-3.4m), the excavation to construct the sewer will be below the groundwater level. Based on WSP's experience with the Finney Road extension, groundwater was difficult to control given the hydraulic connection to the surrounding low-lying peat bog area. For all excavations, some form of temporary dewatering can be expected along with temporary excavation support given the proximity to Sooke Road.

A non-sewer related issue, but still important, is that the fill in Delem Drive and the proposed acceleration lane will continue to settle due to secondary compression of the peat over the next +/-30 years. Surface maintenance in dealing with settlement and drainage issues is to be expected unless the peat is removed from this area and a program of regular surveillance would be recommended so that maintenance can be proactively scheduled.

Draft for Client Review

In light of the anticipated challenges described above, it is suggested that consideration be given to alternative design and construction approaches. The following sections provides WSP's opinion and discussions in order of geotechnical preference to construct the sewer. In the absence of an alternative approach, a more careful review could be completed for a "managed solution" in which there is an acceptance of a higher degree of maintenance for a gravity sewer with a potentially reduced design life and a requirement for increased surveillance.

4.2 RELOCATE THE SEWER

Although it was noted that the sewer needs to be located on the south side of Sooke Road, there may be a significant benefit to avoiding the thick deposits of peat and clay that are known to be present by relocating the line to the north side of the road and potentially closer to the firm ground conditions anticipated beside Awsworth Road. Ultimately, the sewer needs to be connected to the north side of Sooke Road at the Westshore Parkway, and previous experience from Finney Road along with the local topography suggests that the peat and clay, if present, are significantly thinner on the north side of Sooke Road. Based on a review of topography, the Awsworth Road right-of-way appears to have selected to avoid soft ground and possibly flooding conditions.

A separate geotechnical investigation would be required if the sewer was to be relocated and consideration would need to be given as to the effects that the sewer excavation would have on the existing hydro poles, if close to Sooke Road.

4.3 REMOVE AND REPLACE PEAT

Secondary compression of the peat will be problematic to surface and subsurface elements if left in place, especially in the new acceleration lane and on Delem Drive where 250mm to 450mm of settlement may occur over the next 30 years. To essentially avoid secondary compression, the peat should be removed and replaced with a lightweight stable material such that the sewer can be constructed to normal risks of future settlements. A combination of cellular concrete and conventional granular backfill that has an overall density that is less than the density of material that was excavated may be a suitable replacement. Buoyancy of the combined new fill will need to be considered to prevent floatation, particular in period of high seasonal groundwater.

Alternatively, and time permitting, the peat could be replaced with rockfill. Placement of rockfill will induce settlement to the underlying soft clay soils since the rockfill will be much heavier than the removed peat. Settlement of the clay could take more than a year depending on how much additional load is placed (preload) to induce the settlement. Loading will need to be placed in stages to avoid failures of the fill as it is being placed.

Excavation depths (below the current alignment) between 6m and 8m would be required to completely remove the peat. A long-armed excavator would be required to excavate to the full depth. From our observations from the excavation of the Finney Road extension, sloughing was extensive below the groundwater level. If remove and replacement of peat is considered, the installation of temporary sheet piles may be required to maintain stability of the excavation, particularly on the roadside of the excavation.

Temporary dewatering could be considered to place the rockfill or alternatively the work could be completed "in the wet" to maintain trench stability, accepting that placement will be difficult to field review. This was done in part along the Finney Road extension. Dewatering has the potential to induce settlements below the road and could locally reduce the temporary stability of the excavation.

Ideally the sewer line should be moved as far away as possible from the travel portion of Sooke Road such that the excavation does not have an impact on the performance of the road structure, however, there is a concern that the peat thickness could increase to the south. Provided that there are no future changes to the current Sooke Road, consideration could be given to remove and replace the peat only in the new acceleration lane and on Delem Drive

Draft for Client Review

knowing that the majority of secondary compression of the peat has already occurred in the existing alignment. WSP is in the process of confirmation from the BC Ministry of Transportation and Infrastructure (MoTI) that recent maintenance associated with settlement has not occurred within the alignment.

4.4 FORCE MAIN

If the sewer must be located on the south side of Sooke Road, construction of the sewer with a pump station and force main would allow for some certainty that the sewer will operate as intended since the grades of the pipe could be increased and a HDPE forcemain is less sensitive to settlement and lateral strains. Excavation for the pump station would likely be below groundwater level. Some form of temporary dewatering combined with temporary shoring will be required to maintain stability of the excavation close to the existing roadway and issues of temporary stability and dewatering induced settlements would need careful consideration.

Locating the pump station near the interface of the proposed acceleration lane and the existing Sooke Road may be an appropriate location since the new acceleration lane will continue to settle under secondary compression while the existing road prism is expected to be more stable. It is quite likely that a new pump station would need to be supported on piles down to bedrock due to static and seismic foundation design considerations. At this location, hard ground is about 26m below existing grade so pile lengths in the order of 22m would be required to support the pump station. Accommodation would need to be made for future differential settlement of conveyance lines entering the pile supported structure.

If a pump station option is chosen, WSP and the Civil designer will need confirmation on the maximum deflections that a sewer pipe can take before it is not operational. An HDPE pipe might be a good alternative to allow flexibility in the sewer without separation from joints in a segmented pipe. To manage future settlements, lightweight fill may be required as backfill above the water level. Chemically aggressive groundwater conditions would need to be considered with respect to concrete and any metal fittings.

Installation of the sewer pipe by horizontal directional drilling (HDD)is a potential option for the forcemain, but it would need to be reviewed by contractors that are experts in this field to ensure it is a viable option. The positive side of HDD is that limited excavation is required as there would be an exit and entry pit to advance and pull the pipe through.

The existing road fill may be a barrier to this option as the material may not be conducive to drilling and achieving the design grade. Potentially the sewer could be lowered to elevation of the peat/clay interface, but this would likely require a pump station near the intersection of Sooke Road and the West Shore Parkway since the sewer will be considerably deeper than the tie in location to the existing pipe on the West Shore Parkway.

4.5 PILE SUPPORTED PIPE

A pile supported sewer pipe and continuous pile cap, as originally described by Ryzuk is a potential option to address potential differential settlements in the sewer. If considered, pile lengths up to 35m can be expected based on hard ground drilling depths encountered as part of this assessment.

A pile supported pipe with a continuous pile cap will not eliminate secondary compression of the peat soils in the Delem Drive and acceleration lane area. As noted previously, settlements in the order of 250 mm to 450 mm can be expected at the surface over the next 30 years. In the Delem Drive area, where the depth of sewer is in the order of 1.0m, the manholes and sewer will create a hard point over time as settlement occurs around these items. Road maintenance will be required over the years to maintain a continuous road grade for drainage and safety.

Draft for Client Review

East of the acceleration lane, in the existing Sooke Road area, consideration will need to be given to backfilling using lightweight backfill to avoid potential future settlement associated with heavier backfill than what was removed as part of the excavation process. A buoyancy review would be a part of the backfill selection process.

4.6 ADDITIONAL PRELOAD TO THE PEAT

Additional preload of the peat could be considered on Delem Drive and the proposed acceleration lane. The load would need to be added in stages and would be left in place for several years. This additional load would reduce future the magnitude of secondary compression over the design life of the pipe, but a drawback of this is that it would affect access into and from Delem Drive for a prolonged period of time.

4.7 SUMMARY OF OPTIONS

The following table provides a list of the options above along with the pros and cons associated with each option.

Table 4.1 Summary of Pros and Cons for Sewer Options

OPTION DESCRIPTION	PROS	CONS
Relocate the sewer to the north side of the road or preferable Awsworth Road ROW	• Shallower depth to hard ground • Thickness of peat and clay would be less • Less potential settlement • Can be further away from the existing road. • Avoids re-building of a bus stop and going below an existing arch culvert. • The sewer line would setup for servicing lands beyond Awsworth Road.	• Currently not an option due to land issues. • Potential conflict with hydro poles
Remove and replace the peat	• Eliminates secondary compression of the peat. • Reduces risk of poor performance from future settlement of the road surface and sewer line. • Peat could potentially be given to local farmland.	• Requires a lightweight backfill to avoid compression of the underlying soft clay. • Requires a preload if rockfill is used to replace the peat. The preload may need to be in place fo several years. • Care will be needed to not affect adjacent road infrastructure • Bus top needs to be re-built. • Needs to pass below and existing arch culvert • Constructability issues of excavation and dewatering
Force main	• Enhanced resilience against future settlements • Allows for a steeper gradient sewer. • Provides increased certainty that the sewer will function as intended. • Potentially installed with trenchless techniques.	• Requires a pump station that would need to be supported on piles. • Care will be needed to not affect adjacent road infrastructure • Bus top needs to be re-built. • Needs to pass below and existing arch culvert

for Client Review

OPTION DESCRIPTION	PROS	CONS
	• If horizontal directional drilling is used for the installation, it avoids a long excavation adjacent to Sooke Road and minimizes potential damage and rebuilding of adjacent infrastructure.	• Existing surface on Delem Drive and the acceleration lane will continue to settle due to secondary compression of the peat.
Pile supported pipe with continuous pile caps	• Allows for a continuous pipe grade. • The sewer will function as intended. • This would be more preferrable if it could be put on an alignment further away from the road, so it does not impact the performance of the road.	• Requires deep piles to support the pipe. • Care will be needed to not affect adjacent road infrastructure • Bus top needs to be re-built. • Needs to pass below and existing arch culvert • Existing surface on Delem Drive and the acceleration lane will continue to settle due to secondary compression of the peat. This will create a hard point in the road surface as settlement will occur around the pipe and manholes.

Draft for Client Review

5 FUTURE GEOTECHNICAL WORK

Future geotechnical work is expected to comprise:

1. Discussions with WSES on the contents of this report.
2. Preparing a final version of the report.
3. Potential discussions with a contractor on the construction implications of the options.
4. Potential additional drilling to characterize the north side of Sooke Road or an alignment north of Sooke Road.
5. Discussions with the MoTI on current maintenance of Sooke Road that is related to settlement.
6. Detailed design associated with the preferred option.
7. Assistance with tendering and construction.

Draft for Client Review

6 CLOSING

The geotechnical assessment has determined that the location of the proposed sewer is challenging given the local site conditions, variable history of site preparation and settlement sensitive infrastructure. Prior to proceeding, WSP has introduced several alternative approaches, the merits of which we recommend be reviewed. A managed solution to a grade supported sewer has not been discussed although there would need to be acceptance of increased maintenance, a potentially reduced design life prior to repairs, and a commitment to surveillance to proactively manage potential settlements. WSP would be pleased to discuss the contents of this report further at your convenience.

This report has been prepared in accordance with our service contract with West Shore Environmental Services LP. The City of Langford are considered to be an approved user of this report subject to the same contract terms.

Draft for Client Review

APPENDIX

A BOREHOLE LOCATION PLAN

Draft for Client Review

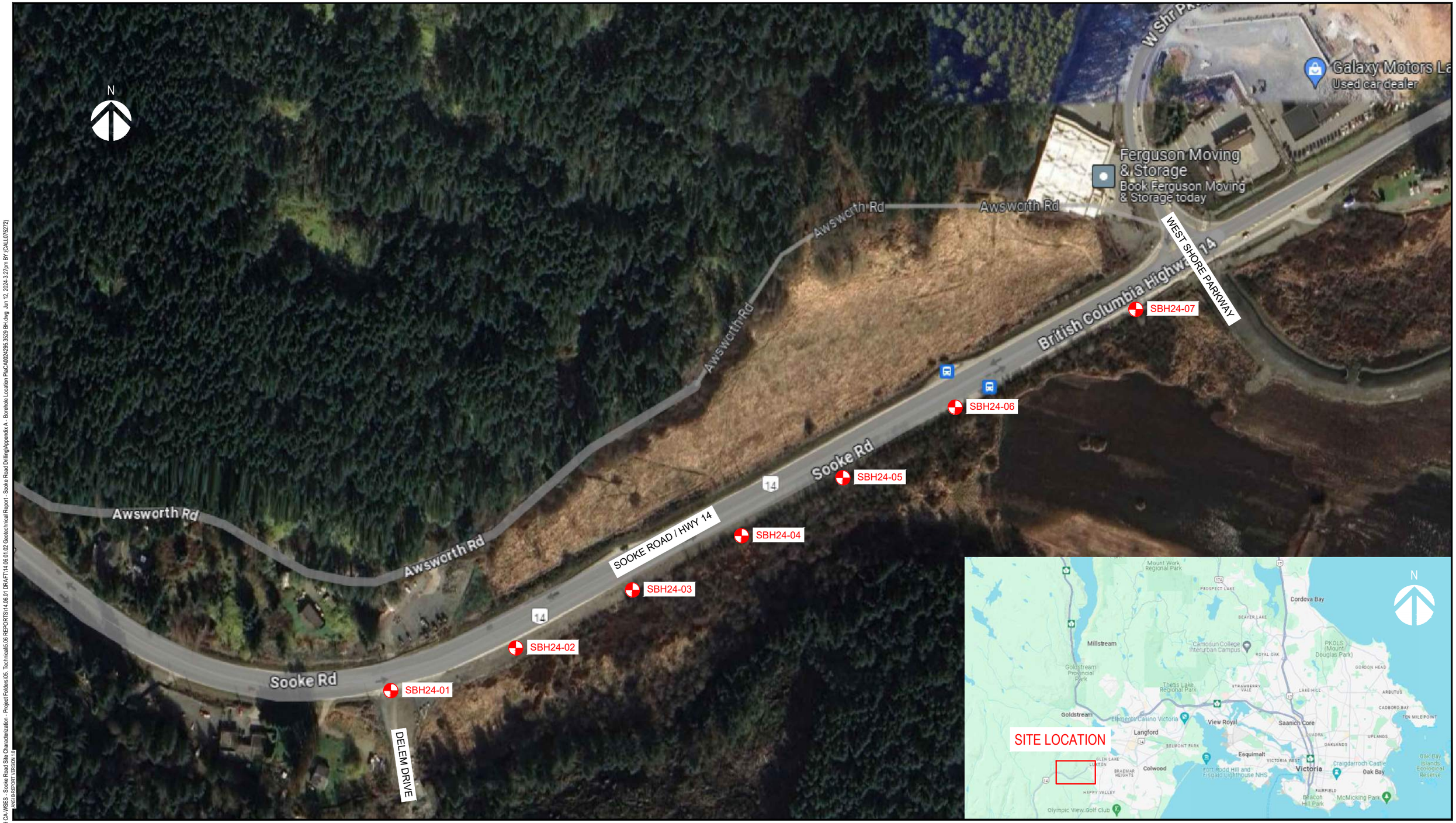

LEGEND:

2024 BOREHOLE

BASEMAP OBTAINED VIA https://www.google.ca/maps/@48.4334427,-123.5434835,15z?entry=ttu ON 12 JUNE 2024

DISCLAIMER: COPYRIGHT:
THIS DRAWING AND DESIGN IS COPYRIGHT PROTECTED WHICH SHALL NOT BE USED, REPRODUCED OR REVISED WITHOUT WRITTEN PERMISSION BY WSP. THE CONTRACTOR SHALL CHECK AND VERIFY ALL DIMENSIONS AND UTILITY LOCATIONS AND REPORT ALL ERRORS AND OMISSIONS PRIOR TO COMMENCING WORK.

REVISION:

REV	DATE	DESCRIPTION	BY
0A	2024-06-12	ISSUED FOR REPORT	DK

wsp
301-3600 Uptown Boulevard, Victoria, BC, V8Z 0B9
T 250-475-1000 | www.wsp.com

PROJECT NO: CA0024295.3529

SCALE:	NTS
DATE:	2024-06-12
DESIGNED BY:	DK
DRAWN BY:	LL
CHECKED BY:	<name>

PROJECT: Sooke Road Site Characterization
HWY 14

CLIENT: West Shore Environmental Services LP

TITLE: BOREHOLE LOCATION PLAN

DRAWING: 01

C:\Users\call07527\WSP O365\CA0024295.3529 CA-WSES - Sooke Road Site Characterization - Project Folders\05. Technical\5.06 REPORTS\14.06.01 DRAFT\14.06.01.02 Geotechnical Report - Sooke Road Drilling\Appendix A - Borehole Location Plan\CA0024295.3529 BH.dwg Jun 12, 2024-3:27pm BY: (CALL07527)
ANSI B REPORT VERSION 1.0

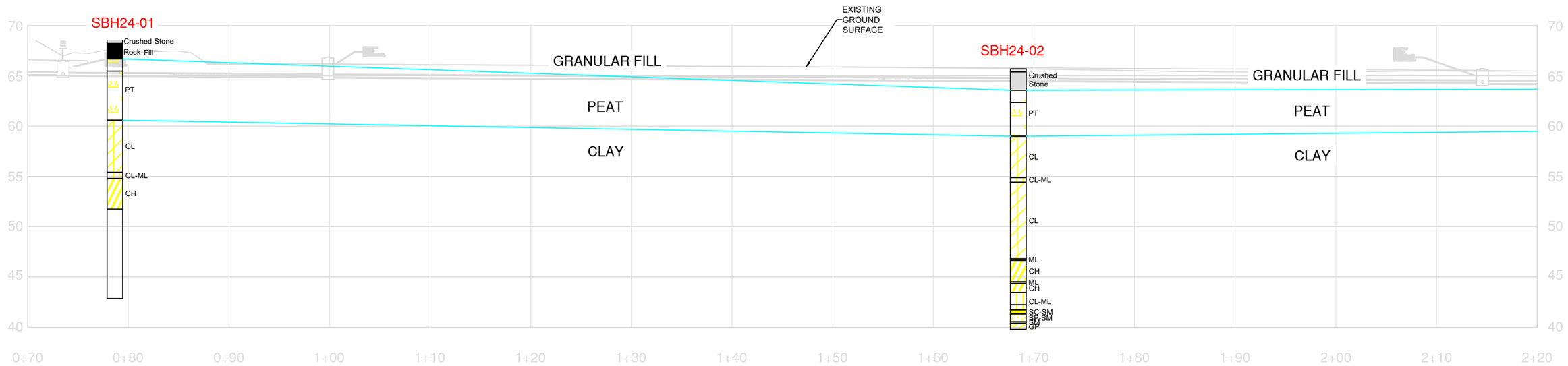

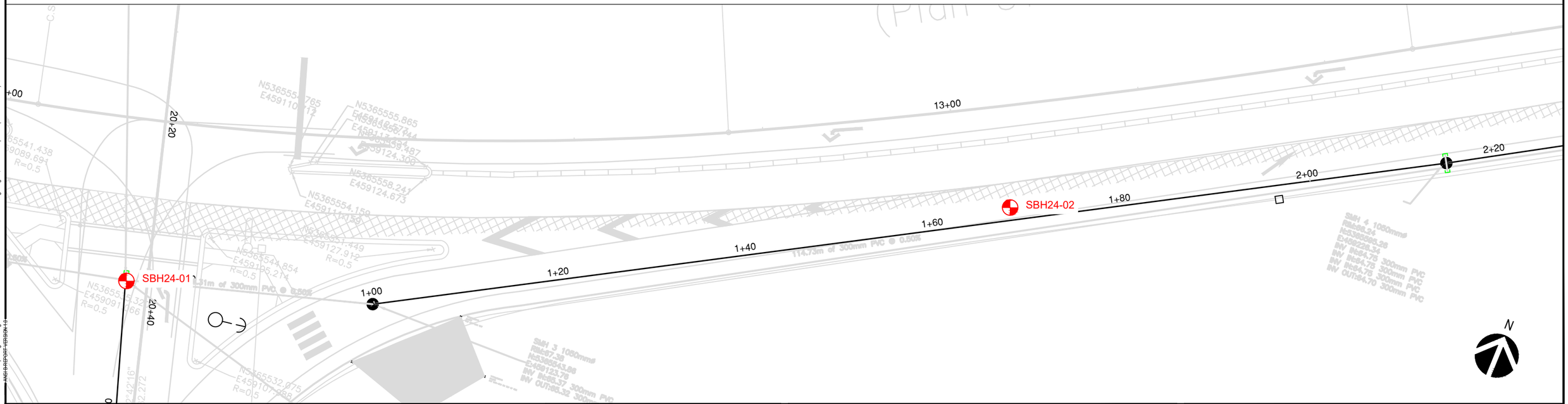

2024 BOREHOLE (APPROX. LOCATION)

BASEMAP PROVIDED BY GWAII ENGINEERING LTD.

DISCLAIMER: COPYRIGHT:
THIS DRAWING AND DESIGN IS COPYRIGHT PROTECTED WHICH SHALL NOT BE USED, REPRODUCED OR REVISED WITHOUT WRITTEN PERMISSION BY WSP. THE CONTRACTOR SHALL CHECK AND VERIFY ALL DIMENSIONS AND UTILITY LOCATIONS AND REPORT ALL ERRORS AND OMISSIONS PRIOR TO COMMENCING WORK.

REVISION:

REV	DATE	DESCRIPTION	BY
0A	2024-08-15	ISSUED FOR REVIEW	---

301-3600 Uptown Boulevard, Victoria, BC, V8Z 0B9
T 250-475-1000 | www.wsp.com

PROJECT NO: CA0024295.3529

SCALE:	AS SHOWN
DATE:	2024-07-10
DESIGNED BY:	DK
DRAWN BY:	LL
CHECKED BY:	CM

PROJECT: SOOKE ROAD SITE CHARACTERIZATION
HWY 14

CLIENT: WEST SHORE ENVIRONMENTAL SERVICES LP

TITLE: BOREHOLE PROFILE

DRAWING: 02

C:\Consign\OC\CA0024295.3529_Sooke_Site_Characterization\Reporting\Drawings\CA0024295.3529 Sooke Road Borehole Section.dwg Aug 15, 2024-12:01pm BY:(Donald.Kaluza)
~~ADD REPORT VERSION HERE~~

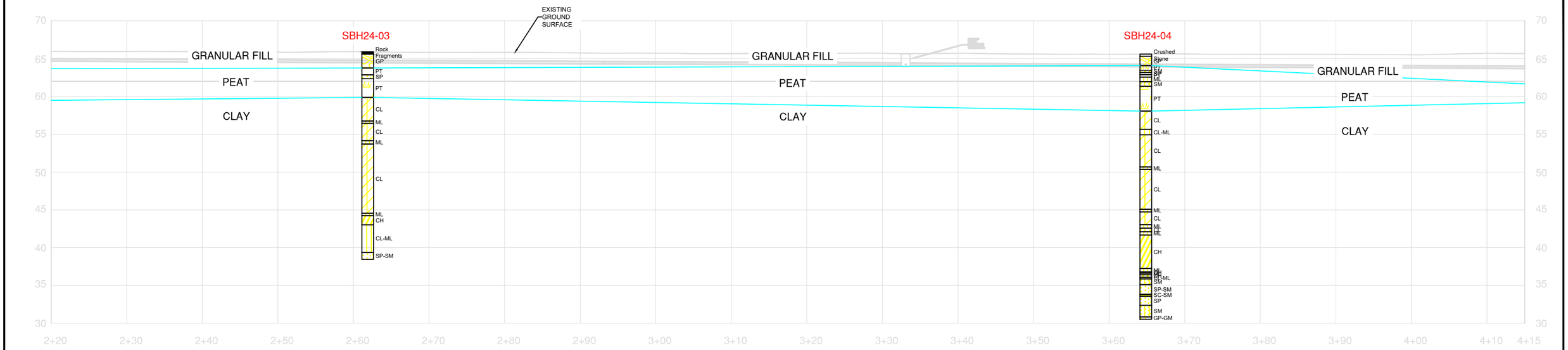

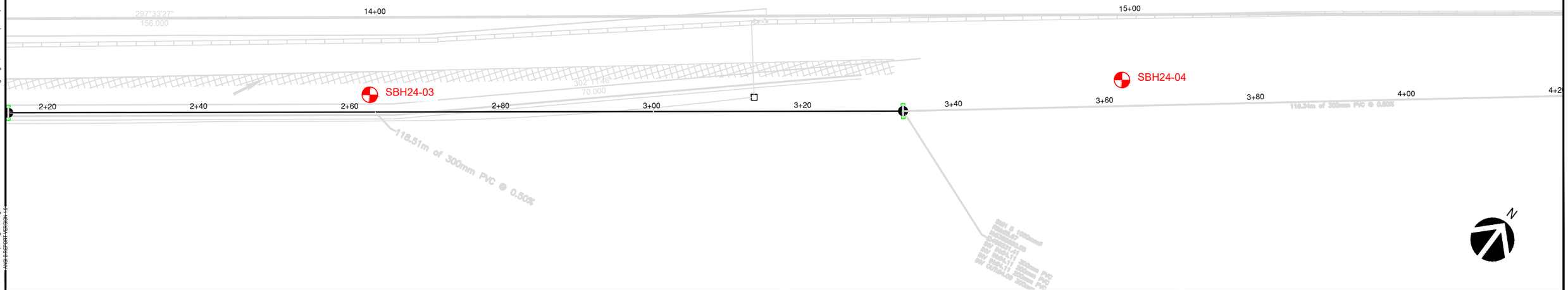

2024 BOREHOLE (APPROX. LOCATION)

BASEMAP PROVIDED BY GWAII ENGINEERING LTD.

DISCLAIMER: COPYRIGHT:
THIS DRAWING AND DESIGN IS COPYRIGHT PROTECTED WHICH SHALL NOT BE USED, REPRODUCED OR REVISED WITHOUT WRITTEN PERMISSION BY WSP. THE CONTRACTOR SHALL CHECK AND VERIFY ALL DIMENSIONS AND UTILITY LOCATIONS AND REPORT ALL ERRORS AND OMISSIONS PRIOR TO COMMENCING WORK.

REVISION:

REV	DATE	DESCRIPTION	BY
0A	2024-08-15	ISSUED FOR REVIEW	---

wsp
301-3600 Uptown Boulevard, Victoria, BC, V8Z 0B9
T 250-475-1000 | www.wsp.com

PROJECT NO: CA0024295.3529

SCALE: AS SHOWN
DATE: 2024-07-10
DESIGNED BY: DK
DRAWN BY: LL
CHECKED BY: CM

PROJECT: SOOKE ROAD SITE CHARACTERIZATION
HWY 14

CLIENT: WEST SHORE ENVIRONMENTAL SERVICES LP

TITLE: BOREHOLE PROFILE

DRAWING: 03

C:\Consign\OC\CA0024295.3529_Sooke_Site_Characterization\Reporting\Drawings\CA0024295.3529 Sooke Road Borehole Section.dwg Aug 15, 2024-12:01pm BY:(Donald.Kaluza)
ANSI B HEIGHT VERSION 11

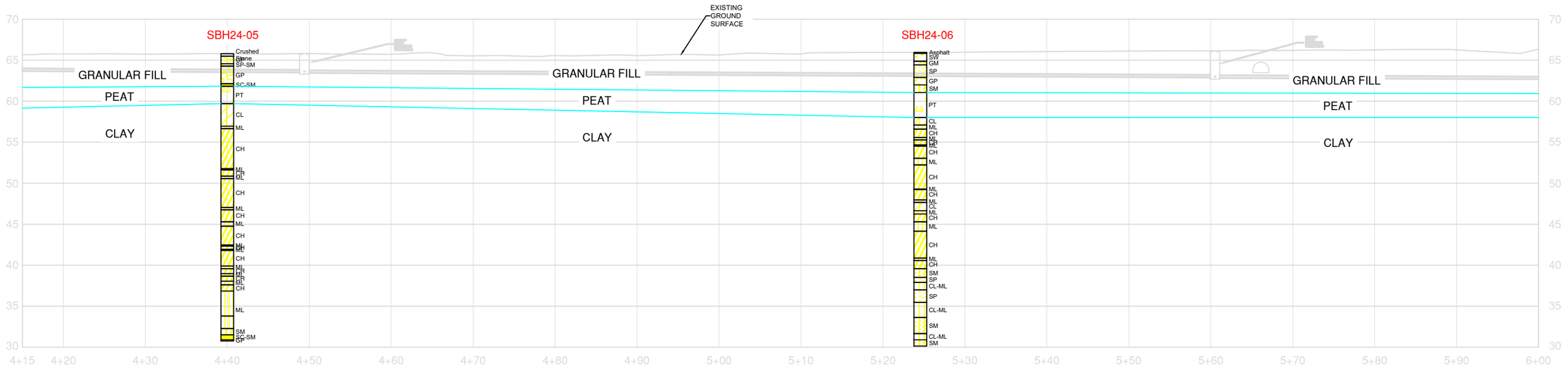

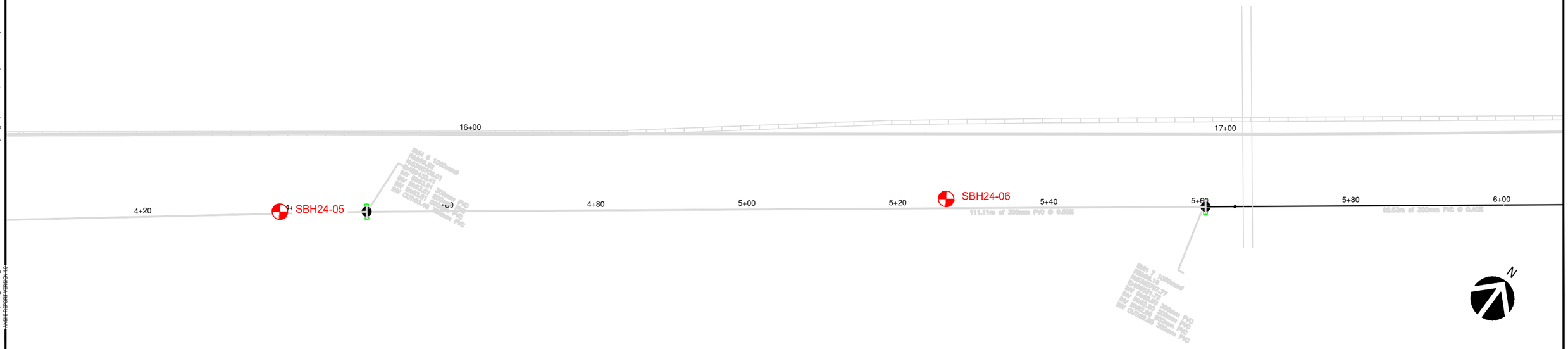

2024 BOREHOLE (APPROX. LOCATION)

BASEMAP PROVIDED BY GWAII ENGINEERING LTD.

DISCLAIMER: COPYRIGHT:
THIS DRAWING AND DESIGN IS COPYRIGHT PROTECTED WHICH SHALL NOT BE USED, REPRODUCED OR REVISED WITHOUT WRITTEN PERMISSION BY WSP. THE CONTRACTOR SHALL CHECK AND VERIFY ALL DIMENSIONS AND UTILITY LOCATIONS AND REPORT ALL ERRORS AND OMISSIONS PRIOR TO COMMENCING WORK.

REVISION:

REV	DATE	DESCRIPTION	BY
0A	2024-08-15	ISSUED FOR <DESCRIPTION>	---

301-3600 Uptown Boulevard, Victoria, BC, V8Z 0B9
T 250-475-1000 | www.wsp.com

PROJECT NO: CA0024295.3529

SCALE: AS SHOWN
DATE: 2024-07-10
DESIGNED BY: DK
DRAWN BY: LL
CHECKED BY: CM

PROJECT: SOOKE ROAD SITE CHARACTERIZATION
HWY 14

CLIENT: WEST SHORE ENVIRONMENTAL SERVICES LP

TITLE: BOREHOLE PROFILE

DRAWING: 04

C:\Consign\OC\CA0024295.3529_Sooke_Site_Characterization\Reporting\Drawings\CA0024295.3529 Sooke Road Borehole Section.dwg Aug 15, 2024-12:02pm BY:(Donald.Kaluza)
ANSI B HEIGHT VERSION 1.0

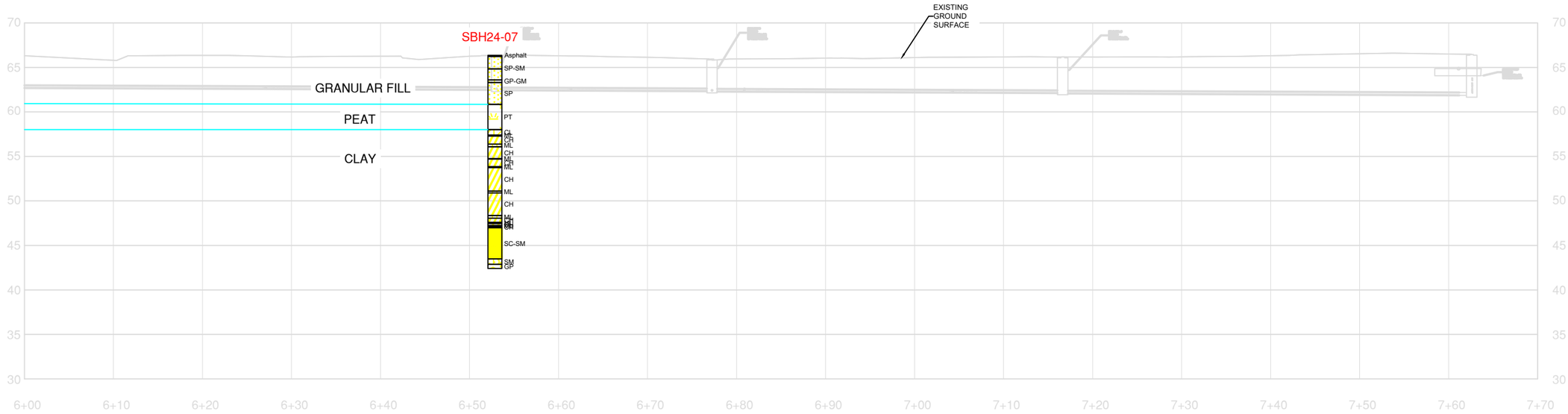

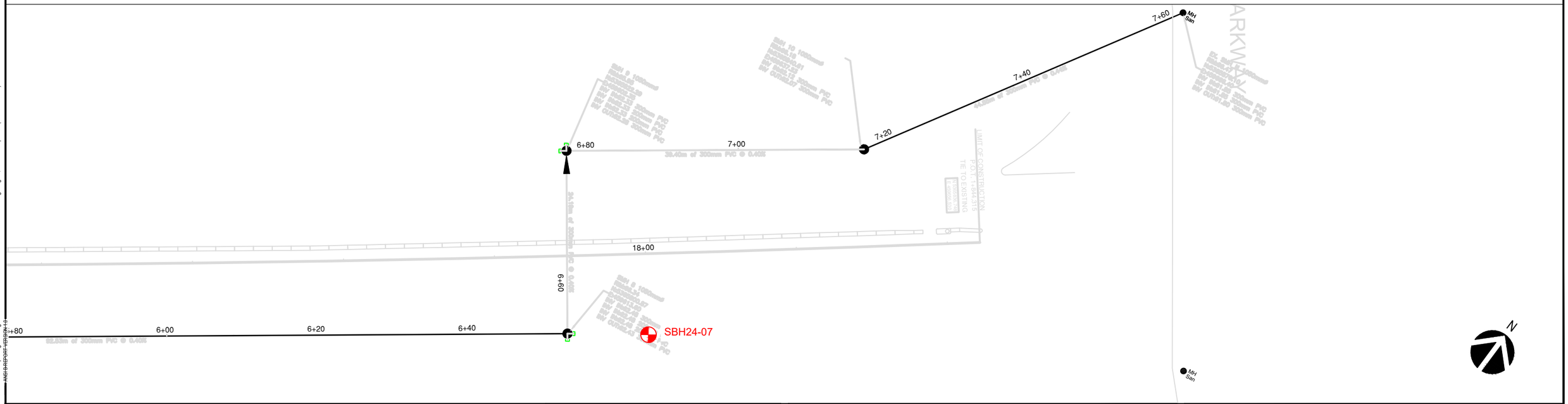

2024 BOREHOLE (APPROX. LOCATION)

BASEMAP PROVIDED BY GWAII ENGINEERING LTD.

DISCLAIMER: COPYRIGHT:
THIS DRAWING AND DESIGN IS COPYRIGHT PROTECTED WHICH SHALL NOT BE USED, REPRODUCED OR REVISED WITHOUT WRITTEN PERMISSION BY WSP. THE CONTRACTOR SHALL CHECK AND VERIFY ALL DIMENSIONS AND UTILITY LOCATIONS AND REPORT ALL ERRORS AND OMISSIONS PRIOR TO COMMENCING WORK.

REVISION:

REV	DATE	DESCRIPTION	BY
0A	2024-08-15	ISSUED FOR REVIEW	---

301-3600 Uptown Boulevard, Victoria, BC, V8Z 0B9
T 250-475-1000 | www.wsp.com

PROJECT NO: CA0024295.3529

SCALE: AS SHOWN
DATE: 2024-07-10
DESIGNED BY: DK
DRAWN BY: LL
CHECKED BY: CM

PROJECT: SOOKE ROAD SITE CHARACTERIZATION
HWY 14

CLIENT: WEST SHORE ENVIRONMENTAL SERVICES LP

TITLE: BOREHOLE PROFILE

DRAWING: 05

C:\Consign\OC\CA0024295.3529_Sooke_Site_Characterization\Reporting\Drawings\CA0024295.3529 Sooke Road Borehole Section.dwg Aug 15, 2024-12:03pm BY:(Donald.Kaluza)
ANSI B HEIGHT VERSION 11.0

APPENDIX

B SITE PHOTOS

Draft for Client Review

PHOTO TABLE

Photo	Description
	Photo 1: Overview of the proposed sewer line alignment along Sooke Road. Photo looking northeast. Photo taken 15 April 2024.
	Photo 2: Overview of the proposed sewer line alignment along Sooke Road. Photo looking southwest. Photo taken 15 April 2024.

	Photo 3: Utility locates on proposed borehole locations. Photo looking northeast. Photo taken 15 April 2024.
	Photo 4: Drill rig set up at SBH24-01. Photo looking north. Photo taken 22 April 2024.

	Photo 5: Drill rig set up at SBH24-02. Photo looking southwest. Photo taken 23 April 2024.
	Photo 6: Drill rig set up at SBH24-03. Photo looking southwest. Photo taken 24 April 2024.

	Photo 7: Drill rig set up at SBH24-04. Photo looking southwest. Photo taken 25 April 2024.
	Photo 8: Drill rig set up at SBH24-05. Photo looking northeast. Photo taken 30 April 2024.

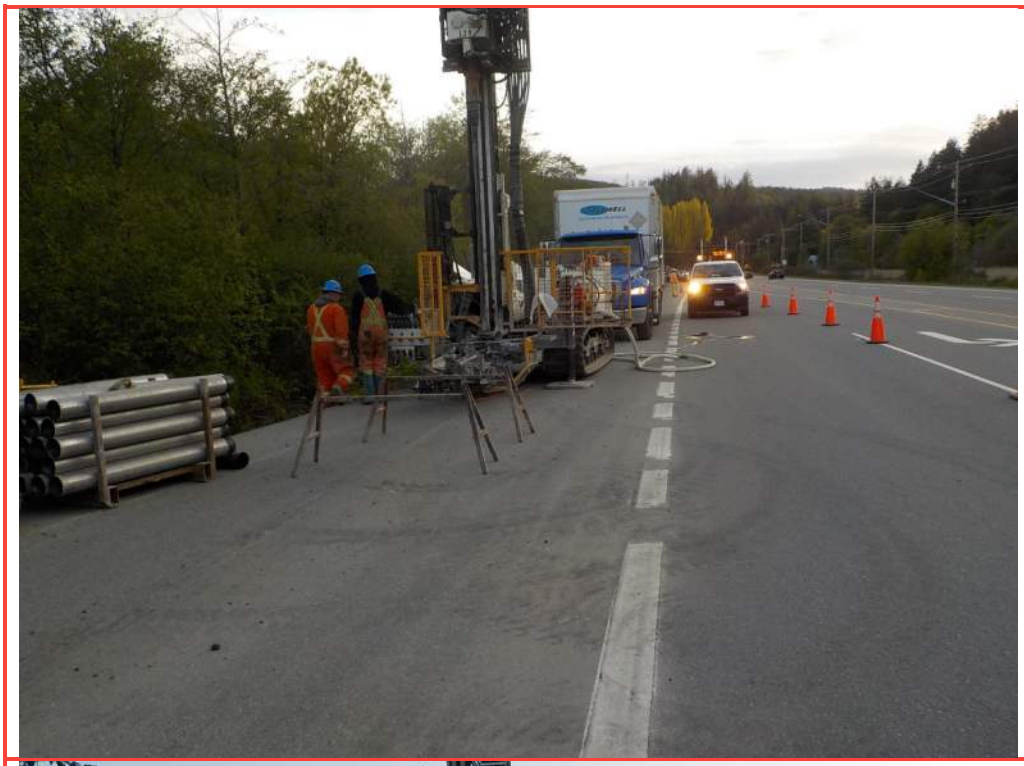	Photo 9: Drill rig set up at SBH24-06. Photo looking northeast. Photo taken 01 May 2024.
	Photo 10: Drill rig set up at SBH24-07. Photo looking northeast. Photo taken 02 May 2024.

APPENDIX

C BOREHOLE LOGS

Draft for Client Review

RECORD OF BOREHOLE: SBH24-01

CLIENT: West Shore Environmental Services L
PROJECT: Sooke Road Site Characterization
PROJECT NO: CA0024295.3529
LOCATION: Sooke Road, langford, BC
DATE: April 22, 2024
INCLINATION: 90.0°
CONTRACTOR: DRILLWELL
ELEVATION: Data Not Available
COORDINATES: Lat: 48.423004° Long: -123.555164°
COORD SYS: UTM Zone 10N
HORZ DATUM: NAD83

DEPTH (m)	DRILL RIG	DRILL METHOD	MATERIAL PROFILE: DESCRIPTION	USCS	STRATA PLOT	ELEV. / DEPTH (m)	SAMPLES: NUMBER	TYPE	REC %	BLOWS	N-VALUE	WATER CONTENT: Plastic & Liquid Limits (%), Water Content (%), NP Nonplastic	GRADATION %: GRAVEL	SAND	FINES	DYNAMIC PENETRATION RESISTANCE, BLOW/0.3m: Nat Vane (kPa), Rem Vane (kPa), Pocket Pen (kPa), Q, U	ADDITIONAL OBSERVATIONS	CONSTRUCTION AND INSTALLATION DETAILS
0	BL LS250	Sonic Drilling - 102-mm Hole Dia.	FILL.			0.00												
			(GP) sandy GRAVEL, fine to coarse, poorly graded, fine to coarse sand; greyish green; moist, dense, With cobbles and boulders.	GP		0.30	SA01	GS										
1																		
2			(PT) PEAT, fibrous, fine to medium sand; brown.	PT		1.83												
3			(PT) PEAT, fibrous; brown.			3.05												
4							SA02	GS				103						
5																		
6							SA03	GS				206						
7							SA04	GS				230						
8			(CL) LEAN CLAY, low plasticity; grey; w > PL, very soft.	CL		7.92	SA05	GS				300						
9							SA06	GS										
10																		

Continued on Next Page

DEPTH SCALE: 1:51
HAMMER TYPE: Automatic

REV:

LOGGED: Dwayne Mackie
CHECKED:

DATE: Apr 22, 2024
DATE:

Draft

RECORD OF BOREHOLE: SBH24-01

CLIENT: West Shore Environmental Services L
PROJECT: Sooke Road Site Characterization
PROJECT NO: CA0024295.3529
LOCATION: Sooke Road, langford, BC
DATE: April 22, 2024
INCLINATION: 90.0°
CONTRACTOR: DRILLWELL
ELEVATION: Data Not Available
COORDINATES: Lat: 48.423004° Long: -123.555164°
COORD SYS: UTM Zone 10N
HORZ DATUM: NAD83

DEPTH (m)	DRILL RIG	DRILL METHOD	MATERIAL PROFILE: DESCRIPTION	USCS	STRATA PLOT	ELEV. / DEPTH (m)	SAMPLES: NUMBER	TYPE	REC %	BLOWS	N-VALUE	WATER CONTENT: Plastic & Liquid Limits (%), Water Content (%), NP Nonplastic	GRADATION %: GRAVEL	SAND	FINES	DYNAMIC PENETRATION RESISTANCE, BLOW/0.3m: Nat Vane (kPa), Rem Vane (kPa), Pocket Pen (kPa), Q, U	ADDITIONAL OBSERVATIONS	CONSTRUCTION AND INSTALLATION DETAILS
11	BL LS250	Sonic Drilling - 102-mm Hole Dia.	(CL) LEAN CLAY, low plasticity; grey; w > PL, very soft.	CL			SA07	GS										
12							SA08	GS										
13							SA09	GS										
			(CL) SILTY CLAY, low plasticity; grey; w > PL, firm.			13.11												
							SA10	GS										
14			CLAY, low plasticity; w > PL, very soft.	CH		13.72												
15							SA11	GS										
16							SA12	GS										
17																		
18																		
19																		
20																		

Continued on Next Page

DEPTH SCALE: 1:51
HAMMER TYPE: Automatic

REV:

LOGGED: Dwayne Mackie
DATE: Apr 22, 2024
CHECKED:
DATE:

Draft

RECORD OF BOREHOLE: SBH24-01

CLIENT: West Shore Environmental Services L
PROJECT: Sooke Road Site Characterization
PROJECT NO: CA0024295.3529
LOCATION: Sooke Road, langford, BC
DATE: April 22, 2024
INCLINATION: 90.0°
CONTRACTOR: DRILLWELL
ELEVATION: Data Not Available
COORDINATES: Lat: 48.423004° Long: -123.555164°
COORD SYS: UTM Zone 10N
HORZ DATUM: NAD83

DEPTH (m)	DRILL RIG	DRILL METHOD	MATERIAL PROFILE: DESCRIPTION	USCS	STRATA PLOT	ELEV. / DEPTH (m)	SAMPLES: NUMBER	TYPE	REC %	BLOWS	N-VALUE	WATER CONTENT: Plastic & Liquid Limits (%), Water Content (%), NP Nonplastic	GRADATION %: GRAVEL	SAND	FINES	DYNAMIC PENETRATION RESISTANCE, BLOW/0.3m: Nat Vane (kPa), Rem Vane (kPa), Pocket Pen (kPa), Q, U	ADDITIONAL OBSERVATIONS	CONSTRUCTION AND INSTALLATION DETAILS
21	BL LS250	Sonic Drilling - 102-mm Hole Dia.																
22																		
23																		
24																		
25																		
26			End of hole at 25.96 m.															
27																		
28																		
29																		
30																		

DEPTH SCALE: 1:51
HAMMER TYPE: Automatic

REV:

LOGGED: Dwayne Mackie
CHECKED:

DATE: Apr 22, 2024
DATE:

Draft

RECORD OF BOREHOLE: SBH24-02

CLIENT: West Shore Environmental Services L
PROJECT: Sooke Road Site Characterization
PROJECT NO: CA0024295.3529
LOCATION: Sooke Road, langford, BC
DATE: April 23, 2024
INCLINATION: 90.0°
CONTRACTOR: DRILLWELL
ELEVATION: 19.81 m (Ground)
COORDINATES: Lat: 48.423289° Long: -123.553951°
COORD SYS: UTM Zone 10N
HORZ DATUM: NAD83

DEPTH (m)	DRILL RIG	DRILL METHOD	DESCRIPTION	USCS	ELEV. / DEPTH (m)	SAMPLES: NUMBER	TYPE	REC %	BLOWS	N-VALUE	WATER CONTENT (Plastic & Liquid Limits (%), Water Content (%), NP Nonplastic)	GRADATION % GRAVEL	SAND	FINES	DYNAMIC PENETRATION RESISTANCE, BLOW/0.3m (Nat Vane (kPa), Rem Vane (kPa), Pocket Pen (kPa), Q, U)	ADDITIONAL OBSERVATIONS	CONSTRUCTION AND INSTALLATION DETAILS
0	BL LS250	Sonic Drilling - 102-mm Hole Dia.	FILL.		0.00												
					19.51												
			(GP) sandy GRAVEL, fine to coarse, poorly graded, angular, fine to coarse sand; greenish grey; Blast rock; moist, dense, With cobbles and boulders, FILL.	GP	0.30												
1																	
2					17.68												
			(PT) sandy gravelly PEAT, fibrous, fine to medium sand; brown.		2.13	SA01	GS										
3																	
					16.46												
			(PT) PEAT, fibrous; brown.	PT	3.35	SA02	GS				286						
4																	
5						SA03	GS				431						
6						SA04	GS				176						
					13.11												
			(CL) LEAN CLAY, low plasticity; grey; w > PL, firm.	CL	6.71	SA05	GS										
7																	
8						SA06	GS										
9																	
10																	

Continued on Next Page

DEPTH SCALE: 1:51
HAMMER TYPE:

REV:

LOGGED: Dwayne Mackie
CHECKED:

DATE: Apr 23, 2024
DATE:

Golder Log Metric - Letter / Soil-Gradation w DP / Golder - 1 Metric Global / Golder CA Auto (was previously common in Canada) / 2024-08-21

Draft

RECORD OF BOREHOLE: SBH24-02

CLIENT: West Shore Environmental Services L
PROJECT: Sooke Road Site Characterization
PROJECT NO: CA0024295.3529
LOCATION: Sooke Road, langford, BC
DATE: April 23, 2024
INCLINATION: 90.0°
CONTRACTOR: DRILLWELL
ELEVATION: 19.81 m (Ground)
COORDINATES: Lat: 48.423289° Long: -123.553951°
COORD SYS: UTM Zone 10N
HORZ DATUM: NAD83

DEPTH (m)	DRILL RIG	DRILL METHOD	MATERIAL PROFILE: DESCRIPTION	USCS	STRATA PLOT	ELEV. / DEPTH (m)	SAMPLES: NUMBER	TYPE	REC %	BLOWS	N-VALUE	WATER CONTENT: Plastic & Liquid Limits (%), Water Content (%), NP Nonplastic	GRADATION %: GRAVEL	SAND	FINES	DYNAMIC PENETRATION RESISTANCE, BLOW/0.3m: Nat Vane (kPa), Rem Vane (kPa), Pocket Pen (kPa), Q, U	ADDITIONAL OBSERVATIONS	CONSTRUCTION AND INSTALLATION DETAILS
			(CL) LEAN CLAY, low plasticity; grey; w > PL, firm.	CL		8.99	SA 07	GS										
11			(CL-ML) SILTY CLAY, low plasticity; grey; w < PL, firm to stiff.	CL-ML		10.82	SA 08	GS										
			(CL) LEAN CLAY, low plasticity; grey; w > PL, very soft.			8.53 11.28												
12							SA 09	GS										
13																		
14																		
15	BL LS250	Sonic Drilling - 102-mm Hole Dia.		CL			SA 10	GS										
16																		
							SA 11	GS										
17																		
							SA 12	GS										
18																		
						0.91												
19			(ML) SILT with slight plasticity, low plasticity; grey; w < PL, firm.	ML		18.90	SA 13	GS										
			CLAY, low plasticity; grey; w > PL, soft.	CH		0.76 19.05												
							SA 14	GS										
20																		

Continued on Next Page

DEPTH SCALE: 1:51
HAMMER TYPE:

REV:

LOGGED: Dwayne Mackie
CHECKED:

DATE: Apr 23, 2024
DATE:

Draft

RECORD OF BOREHOLE: SBH24-02

CLIENT: West Shore Environmental Services L
PROJECT: Sooke Road Site Characterization
PROJECT NO: CA0024295.3529
LOCATION: Sooke Road, langford, BC
DATE: April 23, 2024
INCLINATION: 90.0°
CONTRACTOR: DRILLWELL
ELEVATION: 19.81 m (Ground)
COORDINATES: Lat: 48.423289° Long: -123.553951°
COORD SYS: UTM Zone 10N
HORZ DATUM: NAD83

DEPTH (m)	DRILL RIG	DRILL METHOD	DESCRIPTION	USCS	ELEV. / DEPTH (m)	SAMPLES: NUMBER	TYPE	REC %	BLOWS	N-VALUE	GRADATION %: GRAVEL	SAND	FINES	ADDITIONAL OBSERVATIONS
21	BL LS250	Sonic Drilling - 102-mm Hole Dia.	CLAY, low plasticity; grey; w > PL, soft.	CH	-1.37	SA 15	GS							
			(ML) SILT with slight plasticity, low plasticity; grey; w < PL, firm to stiff.	ML	21.18	SA 16	GS							
			CLAY, low plasticity; w > PL, soft.	CH	-1.52 21.34									
22						SA 17	GS							
					-2.44									
			(CL) SILTY CLAY, low plasticity; grey; w > PL, firm.	CL	22.25	SA 18	GS							
23						SA 19	GS							
					-3.66									
			(CL) sandy SILTY CLAY, low plasticity, fine to medium sand; w > PL, firm.		23.47	SA 20	GS							
					-4.17									
24			(SC) CLAYEY SAND, fine to coarse, low plasticity fines, some fine rounded to subrounded gravel; grey; wet, compact to dense.	SC	23.98									
					-4.57	SA 21	GS							
			(SP-SM) gravelly SAND, fine to coarse, poorly graded, fine rounded to subrounded gravel, some fines; grey; wet, dense.	SP-SM	24.38									
						SA 22	GS							
25					-5.33									
			(SM) SILTY SAND, fine to coarse, low plasticity fines, some fine rounded to subrounded gravel; grey; moist, very dense, Till like.	SM	25.15 -5.49	SA 23	GS							
			(GP-GM) sandy GRAVEL, fine to coarse, poorly graded, angular, fine to coarse sand, some fines; grey; dry, very dense, Bedrock.	GP-GM	25.30									
					-6.10									
			End of hole at 25.91 m.											
26														
27														
28														
29														
30														

WATER CONTENT: Plastic & Liquid Limits (%); Water Content (%); NP Nonplastic; 0 20 40 60 80 100

DYNAMIC PENETRATION RESISTANCE, BLOW/0.3m: 20 40 60 80

Nat Vane (kPa); Rem Vane (kPa); Pocket Pen (kPa); Q; U

0 100 200 300 400 500

CONSTRUCTION AND INSTALLATION DETAILS

DEPTH SCALE: 1:51
HAMMER TYPE:

REV:

LOGGED: Dwayne Mackie
DATE: Apr 23, 2024
CHECKED:
DATE:

Draft

RECORD OF BOREHOLE: SBH24-03

CLIENT:	West Shore Environmental Services L	START DATE:	April 24, 2024	ELEVATION:	Data Not Available
PROJECT:	Sooke Road Site Characterization	END DATE:	April 25, 2024	COORDINATES:	Lat: 48.423708° Long: -123.552847°
PROJECT NO:	CA0024295.3529	INCLINATION:	90.0°	COORD SYS:	UTM Zone 10N
LOCATION:	Sooke Road, langford, BC	CONTRACTOR:	DRILLWELL	HORZ DATUM:	NAD83

DEPTH (m)	DRILL RIG	DRILL METHOD	MATERIAL PROFILE: DESCRIPTION	USCS	STRATA PLOT	ELEV. DEPTH (m)	SAMPLES: NUMBER	TYPE	REC %	BLOWS	N-VALUE	WATER CONTENT: Plastic & Liquid Limits (%), Water Content (%), NP Nonplastic	GRADATION %: GRAVEL	SAND	FINES	DYNAMIC PENETRATION RESISTANCE, BLOW/0.3m: Nat Vane (kPa), Rem Vane (kPa), Pocket Pen (kPa), Q, U	ADDITIONAL OBSERVATIONS	CONSTRUCTION AND INSTALLATION DETAILS
0	BL LS250	Sonic Drilling - 102-mm Hole Dia.	ROCK FRAGMENTS.			0.00												
			(GP) sandy GRAVEL, fine to coarse, poorly graded, angular, fine to coarse sand; greyish green; moist, dense.	GP		0.30												
2			(PT) PEAT, fibrous, some fine to coarse sand, some fine rounded to subrounded gravel; brown.	PT		2.13	SA01	GS										
3			(SP) SAND, fine to coarse, poorly graded, some fine rounded gravel, trace fines; grey; wet, compact.	SP		3.05	SA02	GS										
			(PT) PEAT, fibrous; brown.	PT		3.56	SA03	GS				299						
5							SA04	GS				445						
6			(CL) LEAN CLAY, low plasticity; grey; w > PL, soft to firm.	CL		6.02	SA05	AS				166						
							SA06	TO	100			Plastic and liquid limit						
7							SA07	GS										
8							SA08	GS										
9			(ML) SILT with slight plasticity, low plasticity; grey; w > PL, soft.	ML		9.14	SA09	GS										
			(CL) LEAN CLAY, low plasticity; grey; w > PL, very soft.	CL		9.45												
10																		

Continued on Next Page

DEPTH SCALE: 1:51

HAMMER TYPE:

REV:

LOGGED: Dwayne Mackie

DATE: Apr 24, 2024

CHECKED:

DATE:

Draft

RECORD OF BOREHOLE: SBH24-03

CLIENT:	West Shore Environmental Services L	START DATE:	April 24, 2024	ELEVATION:	Data Not Available
PROJECT:	Sooke Road Site Characterization	END DATE:	April 25, 2024	COORDINATES:	Lat: 48.423708° Long: -123.552847°
PROJECT NO:	CA0024295.3529	INCLINATION:	90.0°	COORD SYS:	UTM Zone 10N
LOCATION:	Sooke Road, langford, BC	CONTRACTOR:	DRILLWELL	HORZ DATUM:	NAD83

DEPTH (m)	DRILL RIG	DRILL METHOD	MATERIAL PROFILE: DESCRIPTION	USCS	STRATA PLOT	ELEV. / DEPTH (m)	SAMPLES: NUMBER	TYPE	REC %	BLOWS	N-VALUE	WATER CONTENT: Plastic & Liquid Limits (%), Water Content (%), NP Nonplastic (0–100)	GRADATION %: GRAVEL	SAND	FINES	DYNAMIC PENETRATION RESISTANCE, BLOW/0.3m: Nat Vane (kPa), Rem Vane (kPa), Pocket Pen (kPa), Q, U (0–500)	ADDITIONAL OBSERVATIONS	CONSTRUCTION AND INSTALLATION DETAILS
11	BL LS250	Sonic Drilling - 102-mm Hole Dia.	(CL) LEAN CLAY, low plasticity; grey; w > PL, very soft.	CL			SA 10	GS										
							SA 11	GS										
12			(ML) SILT with slight plasticity, low plasticity; grey; w > PL, firm.	ML		11.73	SA 12	GS										
			(CL) LEAN CLAY, low plasticity; grey; w > PL, soft.	CL		12.19												
13							SA 13	GS										
14							SA 14	GS										
15																		
16							SA 15	GS										
17																		
18							SA 16	GS										
19																		
20							SA 17	GS										

Continued on Next Page

DEPTH SCALE: 1:51

HAMMER TYPE:

REV:

LOGGED: Dwayne Mackie DATE: Apr 24, 2024

CHECKED: DATE:

Draft

RECORD OF BOREHOLE: SBH24-03

CLIENT:	West Shore Environmental Services L	START DATE:	April 24, 2024	ELEVATION:	Data Not Available
PROJECT:	Sooke Road Site Characterization	END DATE:	April 25, 2024	COORDINATES:	Lat: 48.423708° Long: -123.552847°
PROJECT NO:	CA0024295.3529	INCLINATION:	90.0°	COORD SYS:	UTM Zone 10N
LOCATION:	Sooke Road, langford, BC	CONTRACTOR:	DRILLWELL	HORZ DATUM:	NAD83

DEPTH (m)	DRILL RIG	DRILL METHOD	MATERIAL PROFILE: DESCRIPTION	USCS	STRATA PLOT	ELEV. DEPTH (m)	SAMPLES: NUMBER	TYPE	REC %	BLOWS	N-VALUE	WATER CONTENT: Plastic & Liquid Limits (%); Water Content (%); NP Nonplastic	GRADATION %: GRAVEL	SAND	FINES	DYNAMIC PENETRATION RESISTANCE, BLOW/0.3m: Nat Vane (kPa); Rem Vane (kPa); Pocket Pen (kPa); Q; U	ADDITIONAL OBSERVATIONS	CONSTRUCTION AND INSTALLATION DETAILS
21	BL LS250	Sonic Drilling - 102-mm Hole Dia.	(CL) LEAN CLAY, low plasticity; grey; w > PL, soft.	CL			SA 18	GS										
			(ML) SILT with slight plasticity, low plasticity; grey; w > PL, firm.	ML		21.34	SA 19	GS										
22			CLAY, low plasticity; grey; w > PL, soft.	CH		21.64	SA 20	GS										
23			(CL-ML) SILTY CLAY, low plasticity, some sand, trace fine gravel; grey; w > PL, soft.	CL-ML		22.86	SA 21	GS										
24																		
25							SA 22	GS										
26							SA 23	GS										
			(SP-SM) gravelly SAND, fine to coarse, poorly graded, fine to coarse rounded to subrounded gravel, some fines; grey; wet, dense to very dense.	SP-SM		26.52	SA 24	GS										
27			End of hole at 27.43 m.															
28																		
29																		
30																		

DEPTH SCALE: 1:51

HAMMER TYPE:

REV:

LOGGED: Dwayne Mackie DATE: Apr 24, 2024

CHECKED: DATE:

Golder Log Metric - Letter / Soil-Gradation w DP / Golder - 1 Metric Global / Golder CA Auto (was previously common in Canada) / 2024-08-21

Draft

RECORD OF BOREHOLE: SBH24-04

CLIENT:	West Shore Environmental Services L	START DATE:	April 25, 2024	ELEVATION:	Data Not Available
PROJECT:	Sooke Road Site Characterization	END DATE:	April 29, 2024	COORDINATES:	Lat: 48.424137° Long: -123.551635°
PROJECT NO:	CA0024295.3529	INCLINATION:	90.0°	COORD SYS:	UTM Zone 10N
LOCATION:	Sooke Road, langford, BC	CONTRACTOR:	DRILLWELL	HORZ DATUM:	NAD83

DEPTH (m)	DESCRIPTION	USCS	ELEV. DEPTH (m)	SAMPLES NUMBER	TYPE	REC %	BLOWS	N-VALUE	WATER CONTENT (%)	GRADATION % GRAVEL	SAND	FINES	DYNAMIC PENETRATION RESISTANCE, BLOW/0.3m	ADDITIONAL OBSERVATIONS	CONSTRUCTION AND INSTALLATION DETAILS
0	CRUSHED STONE.		0.00												
	(GP) sandy GRAVEL, fine to coarse, poorly graded, angular, fine to coarse sand, trace fines; greyish green; moist, dense.	GP	0.30												
1															
	(PT) PEAT, fibrous, with fine to coarse sand, some fine subrounded to angular gravel; brown.	PT	1.52												
2	(SM) SILTY SAND and GRAVEL, fine to medium, and fine subrounded to subangular GRAVEL; grey; wet, loose.	SM	2.13												
	(SP) SAND and GRAVEL, fine to coarse, poorly graded, and fine GRAVEL, trace fines; grey; wet, loose to compact.	SP	2.44												
	(PT) PEAT, fibrous, with fine to coarse sand, some fine gravel; brown.	PT	2.74												
3	(ML) and SAND, and fine to medium SAND; grey; wet, loose to compact.	ML	3.05	SA 01	GS										
	(SM) gravelly SILTY SAND, fine to coarse, fine gravel; grey; wet, dense.	SM	3.66	SA 02	GS										
4	(PT) PEAT, fibrous; brown.	PT	4.27	SA 03	GS				113						
5															
				SA 04	GS				358						
6															
				SA 05	GS				495						
7															
	(CL) LEAN CLAY, low plasticity; grey; w > PL, firm.	CL	7.54	SA 06	GS				114						
8				SA 07	TO	113			Plastic and liquid limit						
9				SA 08	GS										
				SA 09	GS										
10	(CL-ML) SILTY CLAY, low plasticity; grey; w > PL, firm.		9.96												

Continued on Next Page

DRILL RIG: BL LS250

DRILL METHOD: Sonic Drilling - 102-mm Hole Dia.

WATER CONTENT: Plastic & Liquid Limits (%); Water Content (%); NP Nonplastic

DYNAMIC PENETRATION RESISTANCE, BLOW/0.3m: Nat Vane (kPa); Rem Vane (kPa); Pocket Pen (kPa); Q; U

DEPTH SCALE: 1:51

HAMMER TYPE:

REV:

LOGGED: Dwayne Mackie

DATE: Apr 25, 2024

CHECKED:

DATE:

Draft

RECORD OF BOREHOLE: SBH24-04

CLIENT:	West Shore Environmental Services L	START DATE:	April 25, 2024	ELEVATION:	Data Not Available
PROJECT:	Sooke Road Site Characterization	END DATE:	April 29, 2024	COORDINATES:	Lat: 48.424137° Long: -123.551635°
PROJECT NO:	CA0024295.3529	INCLINATION:	90.0°	COORD SYS:	UTM Zone 10N
LOCATION:	Sooke Road, langford, BC	CONTRACTOR:	DRILLWELL	HORZ DATUM:	NAD83

DEPTH (m)	DESCRIPTION	USCS	ELEV. DEPTH (m)	SAMPLES NUMBER	SAMPLES TYPE	SAMPLES REC %	SAMPLES BLOWS	SAMPLES N-VALUE	GRADATION % GRAVEL	GRADATION % SAND	GRADATION % FINES
0	(CL-ML) SILTY CLAY, low plasticity; grey; w > PL, firm.	CL-ML		SA 10	GS						
10.67	(CL) LEAN CLAY, low plasticity; grey; w > PL, soft.	CL	10.67	SA 11	GS						
				SA 12	GS		8				
					TO						
				SA 13	GS						
14.94	(ML) SILT with slight plasticity, low plasticity; grey; w > PL, firm.	ML	14.94	SA 14	GS						
15.24	(CL) LEAN CLAY, low plasticity; grey; w > PL, soft.	CL	15.24	SA 15	GS						
				SA 16	GS						
				SA 17	GS						

Plastic & Liquid Limits (%) ⊢ ⊢
Water Content (%) ○
NP Nonplastic

DYNAMIC PENETRATION RESISTANCE, BLOW/0.3m: 20 40 60 80
Nat Vane (kPa) ⊕
Rem Vane (kPa) ⊗
Pocket Pen (kPa) ■
Q ●
U ○

0 100 200 300 400 500

DRILL RIG: BL LS250
DRILL METHOD: Sonic Drilling - 102-mm Hole Dia.

ADDITIONAL OBSERVATIONS

CONSTRUCTION AND INSTALLATION DETAILS

Continued on Next Page

DEPTH SCALE: 1:51
HAMMER TYPE:

REV:

LOGGED: Dwayne Mackie
CHECKED:

DATE: Apr 25, 2024
DATE:

Draft

RECORD OF BOREHOLE: SBH24-04

CLIENT:	West Shore Environmental Services L	START DATE:	April 25, 2024	ELEVATION:	Data Not Available
PROJECT:	Sooke Road Site Characterization	END DATE:	April 29, 2024	COORDINATES:	Lat: 48.424137° Long: -123.551635°
PROJECT NO:	CA0024295.3529	INCLINATION:	90.0°	COORD SYS:	UTM Zone 10N
LOCATION:	Sooke Road, langford, BC	CONTRACTOR:	DRILLWELL	HORZ DATUM:	NAD83

DEPTH (m)	DRILL RIG	DRILL METHOD	DESCRIPTION	USCS	ELEV. DEPTH (m)	SAMPLES NUMBER	SAMPLES TYPE	SAMPLES REC %	SAMPLES BLOWS	SAMPLES N-VALUE	GRADATION % GRAVEL	GRADATION % SAND	GRADATION % FINES	ADDITIONAL OBSERVATIONS	CONSTRUCTION AND INSTALLATION DETAILS
20	BL LS250	Sonic Drilling - 102-mm Hole Dia.	(CL) LEAN CLAY, low plasticity; grey; w > PL, soft.	CL		SA 18	GS								
			(ML) SILT with slight plasticity, low plasticity; grey; w > PL, firm.	ML	20.52										
21			(CL) LEAN CLAY, low plasticity; grey; w > PL, soft.	CL	20.88	SA 19	GS								
22						SA 20	GS								
			(ML) SILT with slight plasticity, low plasticity; grey; w > PL, firm.	ML	22.56	SA 21	GS								
23			(CL) LEAN CLAY, low plasticity; grey; w > PL, soft.	CL	23.01										
			(ML) SILT with slight plasticity, low plasticity; grey; w > PL, firm.	ML	23.47	SA 22	GS								
24			CLAY, low plasticity; grey; w > PL, soft.	CH	23.93	SA 23	GS								
25						SA 24	GS								
26															
27						SA 25	GS								
28															
			(ML) SILT with slight plasticity, low plasticity; grey; w > PL.	ML	28.35	SA 26	GS								
			CLAY, low plasticity; grey; w > PL.	CH	28.80	SA 27	GS								
29			(ML) SILT with slight plasticity, low plasticity; brown; w > PL, firm.	ML	28.96	SA 28	GS								
			CLAY, low plasticity; grey; w > PL.	CH	29.18	SA 29	GS								
			(Cl) sandy SILTY CLAY, low plasticity, fine to medium sand, trace fine rounded to subrounded gravel; grey; w > PL, firm to stiff.	Cl	29.51	SA 30	GS								
			(SM) SILTY SAND, fine to medium; grey; wet, compact to dense.	SM	29.72										
30															

Continued on Next Page

WATER CONTENT: Plastic & Liquid Limits (%); Water Content (%); NP Nonplastic; 0–100

DYNAMIC PENETRATION RESISTANCE, BLOW/0.3m: 20 40 60 80; Nat Vane (kPa); Rem Vane (kPa); Pocket Pen (kPa); Q; U; 0–100–200–300–400–500

DEPTH SCALE: 1:51

HAMMER TYPE:

REV:

LOGGED: Dwayne Mackie DATE: Apr 25, 2024

CHECKED: DATE:

Draft

RECORD OF BOREHOLE: SBH24-04

CLIENT:	West Shore Environmental Services L	START DATE:	April 25, 2024	ELEVATION:	Data Not Available
PROJECT:	Sooke Road Site Characterization	END DATE:	April 29, 2024	COORDINATES:	Lat: 48.424137° Long: -123.551635°
PROJECT NO:	CA0024295.3529	INCLINATION:	90.0°	COORD SYS:	UTM Zone 10N
LOCATION:	Sooke Road, langford, BC	CONTRACTOR:	DRILLWELL	HORZ DATUM:	NAD83

DEPTH (m)	DRILL RIG	DRILL METHOD	MATERIAL PROFILE: DESCRIPTION	USCS	STRATA PLOT	ELEV. DEPTH (m)	SAMPLES: NUMBER	TYPE	REC %	BLOWS	N-VALUE	WATER CONTENT: Plastic & Liquid Limits (%), Water Content (%), NP Nonplastic	GRADATION %: GRAVEL	SAND	FINES	DYNAMIC PENETRATION RESISTANCE, BLOW/0.3m: Nat Vane (kPa), Rem Vane (kPa), Pocket Pen (kPa), Q, U	ADDITIONAL OBSERVATIONS	CONSTRUCTION AND INSTALLATION DETAILS
31	BLLS250	Sonic Drilling - 102-mm Hole Dia.	(SM) SILTY SAND, fine to medium; grey; wet, compact to dense.	SM			SA 31	GS										
			(SP-SM) SAND, fine to medium, poorly graded, some fines; grey; wet, compact to dense.	SP-SM		30.48	SA 32	GS										
32			(SC) gravelly CLAYEY SAND, fine to medium, fine rounded to subrounded gravel; grey; wet, compact to dense.	SC		31.75	SA 33	GS										
			(SP) SAND, fine to medium, poorly graded, trace fines; grey; wet, dense.	SP		32.00												
33							SA 34	GS										
			(SM) SILTY SAND, fine to medium, and fines, some fine rounded to subrounded gravel; grey; wet, dense.	SM		33.22												
34							SA 35	GS										
35			(GP-GM) sandy GRAVEL, fine to coarse, poorly graded, angular, some fines; wet, very dense, Possible bedrock.	GP-GM		34.75												
			End of hole at 35.05 m.															
36																		
37																		
38																		
39																		
40																		

DEPTH SCALE: 1:51

HAMMER TYPE:

REV:

LOGGED: Dwayne Mackie DATE: Apr 25, 2024

CHECKED: DATE:

Draft

RECORD OF BOREHOLE: SBH24-05

CLIENT: West Shore Environmental Services L
PROJECT: Sooke Road Site Characterization
PROJECT NO: CA0024295.3529
LOCATION: Sooke Road, langford, BC
DATE: April 30, 2024
INCLINATION: 90.0°
CONTRACTOR: DRILLWELL
ELEVATION: Data Not Available
COORDINATES: Lat: 48.424492° Long: -123.550787°
COORD SYS: UTM Zone 10N
HORZ DATUM: NAD83

DEPTH (m)	DRILL RIG	DRILL METHOD	MATERIAL PROFILE: DESCRIPTION	USCS	STRATA PLOT	ELEV. / DEPTH (m)	SAMPLES: NUMBER	TYPE	REC %	BLOWS	N-VALUE	WATER CONTENT: Plastic & Liquid Limits (%), Water Content (%), NP Nonplastic	GRADATION %: GRAVEL	SAND	FINES	DYNAMIC PENETRATION RESISTANCE, BLOW/0.3m: Nat Vane (kPa), Rem Vane (kPa), Pocket Pen (kPa), Q, U	ADDITIONAL OBSERVATIONS	CONSTRUCTION AND INSTALLATION DETAILS
0	BL LS250	Sonic Drilling - 102-mm Hole Dia.	CRUSHED STONE; Blast rock fill.			0.00												
			(GP) GRAVEL, fine to coarse, poorly graded, angular, some fine to coarse sand, trace fines; brown; wet, dense, Blast rock fill.	GP		0.30												
1			(SP-SM) gravelly SAND, fine to coarse, poorly graded, fine rounded to subrounded gravel, some fines; brown; wet, dense.	SP-SM		1.22												
			(GP) GRAVEL, fine to coarse, poorly graded, angular, some fine to coarse sand, trace fines; brown; wet, dense, Blast rock fill.	GP		1.52												
2																		
3																		
			(SC) gravelly CLAYEY SAND, fine to coarse, fine gravel; grey; wet, dense.	SC		3.66	SA 01	GS										
4			(PT) PEAT, fibrous; brown.	PT		3.96	SA 02	GS				275						
5																		
							SA 03	GS				406						
6			(CL) LEAN CLAY, low plasticity; grey; w > PL, very soft.	CL		6.10												
7							SA 04	GS										
8							SA 05	GS										
9			(ML) SILT with slight plasticity, low plasticity; grey; w > PL, firm.	ML		8.84	SA 06	GS										
			CLAY, low plasticity; grey; w > PL, soft.	CH		9.14												
10																		

Continued on Next Page

DEPTH SCALE: 1:51
HAMMER TYPE:

REV:

LOGGED: Dwayne Mackie
CHECKED:

DATE: Apr 30, 2024
DATE:

Golder Log Metric - Letter / Soil-Gradation w DP / Golder - 1 Metric Global / Golder CA Auto (was previously common in Canada) / 2024-08-21

Draft

RECORD OF BOREHOLE: SBH24-05

CLIENT: West Shore Environmental Services L
PROJECT: Sooke Road Site Characterization
PROJECT NO: CA0024295.3529
LOCATION: Sooke Road, langford, BC
DATE: April 30, 2024
INCLINATION: 90.0°
CONTRACTOR: DRILLWELL
ELEVATION: Data Not Available
COORDINATES: Lat: 48.424492° Long: -123.550787°
COORD SYS: UTM Zone 10N
HORZ DATUM: NAD83

DEPTH (m)	DRILL RIG	DRILL METHOD	MATERIAL PROFILE: DESCRIPTION	USCS	STRATA PLOT	ELEV. / DEPTH (m)	SAMPLES: NUMBER	TYPE	REC %	BLOWS	N-VALUE	WATER CONTENT: Plastic & Liquid Limits (%), Water Content (%), NP Nonplastic	GRADATION %: GRAVEL	SAND	FINES	DYNAMIC PENETRATION RESISTANCE, BLOW/0.3m: Nat Vane (kPa), Rem Vane (kPa), Pocket Pen (kPa), Q, U	ADDITIONAL OBSERVATIONS	CONSTRUCTION AND INSTALLATION DETAILS
11	BL LS250	Sonic Drilling - 102-mm Hole Dia.	CLAY, low plasticity; grey; w > PL, soft.	CH			SA 07	GS										
12							SA 08	GS										
13							SA 09	GS										
14			(ML) SILT with slight plasticity, low plasticity; grey; w > PL, firm.	ML		14.02	SA 10	GS										
			CLAY, low plasticity; grey; w > PL, soft.	CH		14.17	SA 11	GS										
15			(ML) SILT with slight plasticity, low plasticity; grey; w > PL, firm.	ML		14.94	SA 12	GS										
			CLAY, low plasticity; grey; w > PL, soft.	CH		15.24	SA 13	GS										
16																		
17							SA 14	GS										
18																		
			(ML) SILT with slight plasticity, low plasticity; grey; w > PL, firm.	ML		18.75	SA 15	GS										
19			CLAY, low plasticity; grey; w > PL, soft.	CH		19.05	SA 16	GS										
20																		

Continued on Next Page

DEPTH SCALE: 1:51
HAMMER TYPE:

REV:

LOGGED: Dwayne Mackie
CHECKED:

DATE: Apr 30, 2024
DATE:

Golder Log Metric - Letter / Soil-Gradation w DP / Golder - 1 Metric Global / Golder CA Auto (was previously common in Canada) / 2024-08-21

Draft

RECORD OF BOREHOLE: SBH24-05

CLIENT: West Shore Environmental Services L
PROJECT: Sooke Road Site Characterization
PROJECT NO: CA0024295.3529
LOCATION: Sooke Road, langford, BC
DATE: April 30, 2024
INCLINATION: 90.0°
CONTRACTOR: DRILLWELL
ELEVATION: Data Not Available
COORDINATES: Lat: 48.424492° Long: -123.550787°
COORD SYS: UTM Zone 10N
HORZ DATUM: NAD83

DEPTH (m)	DRILL RIG	DRILL METHOD	DESCRIPTION	USCS	ELEV. DEPTH (m)	SAMPLES NUMBER	TYPE	REC %	BLOWS	N-VALUE	GRADATION % GRAVEL	SAND	FINES	ADDITIONAL OBSERVATIONS
20	BL LS250	Sonic Drilling - 102-mm Hole Dia.	CLAY, low plasticity; grey; w > PL, soft.	CH										
			(ML) SILT with slight plasticity, low plasticity; grey; w > PL, firm.	ML	20.50	SA 17	GS							
21			CLAY, low plasticity; grey; w > PL, soft.	CH	21.03	SA 18	GS							
22						SA 19	GS							
23														
			(ML) SILT with slight plasticity, low plasticity; grey; w > PL, firm.	ML	23.32									
			CLAY, low plasticity; grey; w > PL, soft.	CH	23.47									
			(ML) SILT with slight plasticity, low plasticity; grey; w > PL, firm.	ML	23.85	SA 20	GS							
24			CLAY, low plasticity; grey; w > PL, soft.	CH	24.00	SA 21	GS							
25						SA 22	GS							
26			(ML) SILT with slight plasticity, low plasticity; grey; w > PL, firm.	ML	25.91									
			CLAY, low plasticity; grey; w > PL, soft.	CH	26.21									
27			(ML) SILT with slight plasticity, low plasticity; grey; w > PL, firm.	ML	26.82	SA 23	GS							
			CLAY, low plasticity; grey; w > PL, very soft.	CH	27.13	SA 24	GS							
28			(ML) SILT with slight plasticity, low plasticity; grey; w > PL, firm to stiff.	ML	27.74	SA 25	GS							
			CLAY, low plasticity; grey; w > PL, very soft.	CH	28.19	SA 26	GS							
29			(ML) SILT with slight plasticity, low plasticity; grey; w > PL, firm to stiff.	ML	28.96	SA 27	GS							
30														

Continued on Next Page

DEPTH SCALE: 1:51
HAMMER TYPE:

REV:

LOGGED: Dwayne Mackie
CHECKED:

DATE: Apr 30, 2024
DATE:

Golder Log Metric - Letter / Soil-Gradation w DP / Golder - 1 Metric Global / Golder CA Auto (was previously common in Canada) / 2024-08-21

Draft

RECORD OF BOREHOLE: SBH24-05

CLIENT: West Shore Environmental Services L
PROJECT: Sooke Road Site Characterization
PROJECT NO: CA0024295.3529
LOCATION: Sooke Road, langford, BC
DATE: April 30, 2024
INCLINATION: 90.0°
CONTRACTOR: DRILLWELL
ELEVATION: Data Not Available
COORDINATES: Lat: 48.424492° Long: -123.550787°
COORD SYS: UTM Zone 10N
HORZ DATUM: NAD83

DEPTH (m)	DRILL RIG	DRILL METHOD	MATERIAL PROFILE: DESCRIPTION	USCS	STRATA PLOT	ELEV. / DEPTH (m)	SAMPLES: NUMBER	TYPE	REC %	BLOWS	N-VALUE	WATER CONTENT: Plastic & Liquid Limits (%), Water Content (%), NP Nonplastic	GRADATION %: GRAVEL	SAND	FINES	DYNAMIC PENETRATION RESISTANCE, BLOW/0.3m: Nat Vane (kPa), Rem Vane (kPa), Pocket Pen (kPa), Q, U	ADDITIONAL OBSERVATIONS	CONSTRUCTION AND INSTALLATION DETAILS
31	BLLS250	Sonic Drilling - 102-mm Hole Dia.	(ML) SILT with slight plasticity, low plasticity; grey; w > PL, firm to stiff.	ML			SA 28	GS										
32			(ML) sandy SILT with slight plasticity, low plasticity, fine sand; grey; w > PL, stiff to very stiff.			32.00												
33							SA 29	GS										
34			(SM) SILTY SAND, fine; grey; wet, dense.	SM		33.53	SA 30	GS										
35			(SC) gravelly CLAYEY SAND, low plasticity fines; grey; wet, very dense.	SC		34.29	SA 31	GS										
			(GP) GRAVEL, coarse, poorly graded; wet, very dense, Probable bedrock.	GP		34.90												
			End of hole at 35.05 m.															
36																		
37																		
38																		
39																		
40																		

DEPTH SCALE: 1:51
HAMMER TYPE:

REV:

LOGGED: Dwayne Mackie
CHECKED:

DATE: Apr 30, 2024
DATE:

Draft

RECORD OF BOREHOLE: SBH24-06

CLIENT:	West Shore Environmental Services L	START DATE:	May 01, 2024	ELEVATION:	Data Not Available
PROJECT:	Sooke Road Site Characterization	END DATE:	May 02, 2024	COORDINATES:	Lat: 48.424857° Long: -123.549723°
PROJECT NO:	CA0024295.3529	INCLINATION:	90.0°	COORD SYS:	UTM Zone 10N
LOCATION:	Sooke Road, langford, BC	CONTRACTOR:		HORZ DATUM:	NAD83

DEPTH (m)	DESCRIPTION	USCS	ELEV. DEPTH (m)	SAMPLES NUMBER	TYPE	REC %	BLOWS	N-VALUE	WATER CONTENT (%)	GRADATION % GRAVEL	SAND	FINES	DYNAMIC PENETRATION RESISTANCE, BLOW/0.3m (Nat Vane (kPa), Rem Vane (kPa), Pocket Pen (kPa), Q, U)	ADDITIONAL OBSERVATIONS	CONSTRUCTION AND INSTALLATION DETAILS
0	ASPHALT.		0.00												
	(SW-SM) SAND and GRAVEL, fine to coarse, well graded, and fine angular GRAVEL, some fines; brown; wet, dense, 25mm Road base fil.	SW-SM	0.10												
1	(GM) sandy SILTY GRAVEL, fine to coarse, subangular to angular, fine to medium sand; brown; moist, dense, Possible rock fil.	GM	1.07												
	(SP-SM) SAND and GRAVEL, fine to coarse, poorly graded, and fine rounded to subrounded GRAVEL, some fines; brown; wet, compact to dense.	SP-SM	1.52												
2															
3	(GP) sandy GRAVEL, fine to coarse, poorly graded, subrounded to angular, medium to coarse sand; brown; wet, dense, Possible rock fill.	GP	3.05												
4	(SM) gravelly SILTY SAND, fine to medium, fine rounded to subrounded gravel; wet, compact to dense.	SM	3.96	SA 01	GS										
	(PT) PEAT, fibrous; brown.	PT	4.88												
5															
6				SA 02	GS				412						
7				SA 03	GS				138						
8	(CL) LEAN CLAY, low plasticity; grey; w > PL, very soft.	CL	7.92	SA 04	GS										
9	(ML) SILT with slight plasticity, low plasticity; grey; w > PL, firm.	ML	8.84	SA 05	GS										
	CLAY, low plasticity; grey; w > PL, soft.	CH	9.35	SA 06	GS										
10															

Continued on Next Page

DEPTH SCALE: 1:51

HAMMER TYPE:

REV:

LOGGED: Dwayne Mackie DATE: May 01, 2024

CHECKED: DATE:

Draft

RECORD OF BOREHOLE: SBH24-06

CLIENT:	West Shore Environmental Services L	START DATE:	May 01, 2024	ELEVATION:	Data Not Available
PROJECT:	Sooke Road Site Characterization	END DATE:	May 02, 2024	COORDINATES:	Lat: 48.424857° Long: -123.549723°
PROJECT NO:	CA0024295.3529	INCLINATION:	90.0°	COORD SYS:	UTM Zone 10N
LOCATION:	Sooke Road, langford, BC	CONTRACTOR:		HORZ DATUM:	NAD83

DEPTH (m)	DESCRIPTION	USCS	ELEV. DEPTH (m)	SAMPLES NUMBER	SAMPLES TYPE	SAMPLES REC %	SAMPLES BLOWS	SAMPLES N-VALUE
10	CLAY, low plasticity; grey; w > PL, soft.	CH						
	(ML) SILT with slight plasticity, low plasticity; w > PL, firm.	ML	10.36	SA 07	GS			
	CLAY, low plasticity; grey; w > PL, soft.	CH	10.67					
11	(ML) SILT with slight plasticity, low plasticity; w > PL, firm.	ML	11.28	SA 08	GS			
	CLAY, low plasticity; grey; w > PL, firm.	CH	11.43	SA 09	GS			
12				SA 10	GS			
	(ML) SILT with slight plasticity, low plasticity; w > PL, firm.	ML	12.90	SA 11	GS			
	CLAY, low plasticity; grey; w > PL, soft.	CH	13.72	SA 12	GS			
13								
14								
15								
16				SA 13	GS			
	(ML) SILT with slight plasticity, low plasticity; w > PL, firm.	ML	16.66					
	CLAY, low plasticity; grey; w > PL, soft.	CH	16.71	SA 14	GS			
17								
18	(ML) SILT with slight plasticity, low plasticity; w > PL, firm.	ML	17.98	SA 15	GS			
	(CL) LEAN CLAY, low plasticity; grey; w > PL, firm.	CL	18.29	SA 16	GS			
19								
	(ML) SILT with slight plasticity, low plasticity; w > PL, firm.	ML	19.30	SA 17	GS			
	CLAY, low plasticity; grey; w > PL, soft.	CH	19.71					
20								

WATER CONTENT: Plastic & Liquid Limits (%); Water Content (%); NP Nonplastic; 0 20 40 60 80 100

GRADATION %: GRAVEL | SAND | FINES

DYNAMIC PENETRATION RESISTANCE, BLOW/0.3m: 20 40 60 80; Nat Vane (kPa); Rem Vane (kPa); Pocket Pen (kPa); Q; U; 0 100 200 300 400 500

ADDITIONAL OBSERVATIONS

CONSTRUCTION AND INSTALLATION DETAILS

Continued on Next Page

DEPTH SCALE: 1:51

HAMMER TYPE:

REV:

LOGGED: Dwayne Mackie DATE: May 01, 2024

CHECKED: DATE:

Golder Log Metric - Letter / Soil-Gradation w DP / Golder - 1 Metric Global / Golder CA Auto (was previously common in Canada) / 2024-08-21

Draft

RECORD OF BOREHOLE: SBH24-06

CLIENT: West Shore Environmental Services L
PROJECT: Sooke Road Site Characterization
PROJECT NO: CA0024295.3529
LOCATION: Sooke Road, langford, BC

START DATE: May 01, 2024
END DATE: May 02, 2024
INCLINATION: 90.0°
CONTRACTOR:

ELEVATION: Data Not Available
COORDINATES: Lat: 48.424857° Long: -123.549723°
COORD SYS: UTM Zone 10N
HORZ DATUM: NAD83

DEPTH (m)	DESCRIPTION	USCS	ELEV. DEPTH (m)	SAMPLES NUMBER	TYPE	REC %	BLOWS	N-VALUE
	CLAY, low plasticity; grey; w > PL, soft.	CH		SA 18	GS			
20	(ML) SILT with slight plasticity, low plasticity; w > PL, firm.	ML	20.65	SA 19	GS			
				SA 20	GS			
21	CLAY, low plasticity; grey; w > PL, soft to firm.	CH	21.79	SA 21	GS			
				SA 22	GS			
22	(ML) SILT with slight plasticity, low plasticity; w > PL, firm to stiff.	ML	25.07	SA 23	GS			
	CLAY, low plasticity; grey; w > PL, soft to firm.	CH	25.37	SA 24	GS			
23	(SM) gravelly SILTY SAND, fine to coarse, fine rounded to subrounded gravel; grey; wet, dense.	SM	26.37	SA 25	GS			
24	(SP-SM) SAND, fine to medium, poorly graded, some fines; grey; wet, dense.	SP-SM	27.43	SA 26	GS			
25	(CL) sandy SILTY CLAY, low plasticity, fine sand, trace fine rounded to subrounded gravel; w > PL, hard.	CL	28.04	SA 27	GS			
26	(SP) SAND, fine to medium, poorly graded, trace fines; grey; wet, compact to dense.	SP	28.96	SA 28	GS			

WATER CONTENT: Plastic & Liquid Limits (%); Water Content (%); NP Nonplastic; 0 20 40 60 80 100
GRADATION %: GRAVEL | SAND | FINES
DYNAMIC PENETRATION RESISTANCE, BLOW/0.3m: 20 40 60 80; Nat Vane (kPa); Rem Vane (kPa); Pocket Pen (kPa); Q; U; 0 100 200 300 400 500
ADDITIONAL OBSERVATIONS
CONSTRUCTION AND INSTALLATION DETAILS

Continued on Next Page

DEPTH SCALE: 1:51
HAMMER TYPE:

REV:

LOGGED: Dwayne Mackie
CHECKED:

DATE: May 01, 2024
DATE:

Draft

RECORD OF BOREHOLE: SBH24-06

CLIENT:	West Shore Environmental Services L	START DATE:	May 01, 2024	ELEVATION:	Data Not Available
PROJECT:	Sooke Road Site Characterization	END DATE:	May 02, 2024	COORDINATES:	Lat: 48.424857° Long: -123.549723°
PROJECT NO:	CA0024295.3529	INCLINATION:	90.0°	COORD SYS:	UTM Zone 10N
LOCATION:	Sooke Road, langford, BC	CONTRACTOR:		HORZ DATUM:	NAD83

DEPTH (m)	DRILL RIG	DRILL METHOD	MATERIAL PROFILE: DESCRIPTION	USCS	STRATA PLOT	ELEV. DEPTH (m)	SAMPLES: NUMBER	TYPE	REC %	BLOWS	N-VALUE	WATER CONTENT (Plastic & Liquid Limits (%), Water Content (%), NP Nonplastic)	GRADATION %: GRAVEL	SAND	FINES	DYNAMIC PENETRATION RESISTANCE, BLOW/0.3m (Nat Vane (kPa), Rem Vane (kPa), Pocket Pen (kPa), Q, U)	ADDITIONAL OBSERVATIONS	CONSTRUCTION AND INSTALLATION DETAILS
31			(SP) SAND, fine to medium, poorly graded, trace fines; grey; wet, compact to dense.	SP														
32			(CL) sandy SILTY CLAY, low plasticity, fine sand; grey; w > PL, stiff.	CL		30.48	SA 29	GS										
33			(SM) gravelly SILTY SAND; grey; wet, dense.	SM		32.31	SA 30	GS										
34							SA 31	GS										
35			(CL) sandy SILTY CLAY, low plasticity, fine sand, some fine rounded to subrounded gravel; w > PL, hard.	CL		34.29	SA 32	GS										
			(SM) gravelly SILTY SAND, fine to medium, fine rounded to subrounded gravel; grey; wet, dense, Till like.	SM		35.05	SA 33	GS										
36			End of hole at 35.81 m.															
37																		
38																		
39																		
40																		

Draft

DEPTH SCALE: 1:51

HAMMER TYPE:

REV:

LOGGED: Dwayne Mackie DATE: May 01, 2024

CHECKED: DATE:

RECORD OF BOREHOLE: SBH24-07

CLIENT:	West Shore Environmental Services L	START DATE:	May 02, 2024	ELEVATION:	Data Not Available
PROJECT:	Sooke Road Site Characterization	END DATE:	May 03, 2024	COORDINATES:	Lat: 48.425449° Long: -123.548094°
PROJECT NO:	CA0024295.3529	INCLINATION:	90.0°	COORD SYS:	UTM Zone 10N
LOCATION:	Sooke Road, langford, BC	CONTRACTOR:	DRILLWELL	HORZ DATUM:	NAD83

DEPTH (m)	DRILL RIG	DRILL METHOD	DESCRIPTION	USCS	ELEV. DEPTH (m)	SAMPLES NUMBER	TYPE	REC %	BLOWS	N-VALUE	WATER CONTENT (%)	GRADATION % GRAVEL	SAND	FINES	DYNAMIC PENETRATION RESISTANCE, BLOW/0.3m (Nat Vane (kPa), Rem Vane (kPa), Pocket Pen (kPa), Q, U)	ADDITIONAL OBSERVATIONS	CONSTRUCTION AND INSTALLATION DETAILS
0	BL LS250	Sonic Drilling	ASPHALT.		0.00												
			(SP-SM) SAND and GRAVEL, fine to coarse, poorly graded, and fine to coarse subangular to angular GRAVEL, some fines; moist, dense.	SP-SM	0.13												
1																	
			(SP-SM) gravelly SAND, fine to medium, poorly graded, subangular to angular gravel, some fines; brown; wet, dense.		1.52												
2																	
			(GP-GM) sandy GRAVEL, fine to coarse, poorly graded, subangular to angular, fine to medium sand, some fines; brown; wet, dense, Rock fill.	GP-GM	2.74												
3			(SP) gravelly SAND, fine to coarse, poorly graded, fine subangular to angular gravel, trace fines; Fill.	SP	3.05												
4																	
5																	
			(PT) PEAT, fibrous; brown.	PT	5.49												
6																	
7						SA 01	GS				350						
8						SA 02	GS				168						
			(CL) LEAN CLAY, low plasticity; grey; w > PL, very soft.	CL	8.33	SA 03	GS										
9			(ML) SILT with slight plasticity, low plasticity; grey; w > PL, firm.	ML	8.94												
			CLAY, low plasticity; grey; w > PL, soft.	CH	9.04												
			(ML) SILT with slight plasticity, low plasticity; grey; w > PL, firm.	ML	9.96												
10			Continued on Next Page														

DEPTH SCALE: 1:51

HAMMER TYPE:

REV:

LOGGED: Dwayne Mackie DATE: May 02, 2024

CHECKED: DATE:

Draft

RECORD OF BOREHOLE: SBH24-07

CLIENT:	West Shore Environmental Services L	START DATE:	May 02, 2024	ELEVATION:	Data Not Available
PROJECT:	Sooke Road Site Characterization	END DATE:	May 03, 2024	COORDINATES:	Lat: 48.425449° Long: -123.548094°
PROJECT NO:	CA0024295.3529	INCLINATION:	90.0°	COORD SYS:	UTM Zone 10N
LOCATION:	Sooke Road, langford, BC	CONTRACTOR:	DRILLWELL	HORZ DATUM:	NAD83

DEPTH (m)	DRILL RIG	DRILL METHOD	MATERIAL PROFILE: DESCRIPTION	USCS	STRATA PLOT	ELEV. / DEPTH (m)	SAMPLES: NUMBER	TYPE	REC %	BLOWS	N-VALUE	WATER CONTENT: Plastic & Liquid Limits (%), Water Content (%), NP Nonplastic	GRADATION %: GRAVEL	SAND	FINES	DYNAMIC PENETRATION RESISTANCE, BLOW/0.3m: Nat Vane (kPa), Rem Vane (kPa), Pocket Pen (kPa), Q, U	ADDITIONAL OBSERVATIONS	CONSTRUCTION AND INSTALLATION DETAILS
11	BL LS250	Sonic Drilling	(ML) SILT with slight plasticity, low plasticity; grey; w > PL, firm.	ML			SA 05	GS										
			CLAY, low plasticity; grey; w > PL, soft.	CH		10.26												
12			(ML) SILT with slight plasticity, low plasticity; grey; w > PL, firm.			11.58												
			CLAY, low plasticity; grey; w > PL, soft.	CH		11.63	SA 07	GS										
			(ML) SILT with slight plasticity, low plasticity; grey; w > PL, stiff.	ML		12.50	SA 08	GS										
13			CLAY, low plasticity; grey; w > PL, soft.	CH		12.60	SA 09	GS										
14							SA 10	GS										
15			(ML) SILT with slight plasticity, low plasticity; grey; w > PL, stiff.	ML		15.24	SA 11	GS										
			CLAY, low plasticity; grey; w > PL, soft to firm.	CH		15.44												
16							SA 12	GS										
17							SA 13	GS										
18			(ML) SILT with slight plasticity, low plasticity; grey; w > PL, stiff.	ML		17.98	SA 14	GS										
			CLAY, low plasticity; grey; w > PL, soft to firm.	CH		18.29	SA 15	GS										
19			(ML) SILT with slight plasticity, low plasticity; grey; w > PL, firm to stiff.	ML		18.75	SA 16	GS										
			CLAY, low plasticity; grey; w > PL, soft to firm.	CH		18.90	SA 17	GS										
			(ML) SILT with slight plasticity, low plasticity; grey; w > PL, firm to stiff.	ML			SA 18	GS		5								
			CLAY, low plasticity; grey; w > PL, soft to firm.	CH		19.10												
			(SC) gravelly CLAYEY SAND, fine to medium, low plasticity fines, fine rounded to subrounded gravel; grey; wet, dense, Till like.	SC		19.20	SA 19	GS										
20						19.35												

Continued on Next Page

DEPTH SCALE: 1:51

HAMMER TYPE:

REV:

LOGGED: Dwayne Mackie

DATE: May 02, 2024

CHECKED:

DATE:

Draft

RECORD OF BOREHOLE: SBH24-07

CLIENT:	West Shore Environmental Services L	START DATE:	May 02, 2024	ELEVATION:	Data Not Available
PROJECT:	Sooke Road Site Characterization	END DATE:	May 03, 2024	COORDINATES:	Lat: 48.425449° Long: -123.548094°
PROJECT NO:	CA0024295.3529	INCLINATION:	90.0°	COORD SYS:	UTM Zone 10N
LOCATION:	Sooke Road, langford, BC	CONTRACTOR:	DRILLWELL	HORZ DATUM:	NAD83

DEPTH (m)	DRILL RIG	DRILL METHOD	MATERIAL PROFILE: DESCRIPTION	USCS	STRATA PLOT	ELEV. DEPTH (m)	SAMPLES: NUMBER	TYPE	REC %	BLOWS	N-VALUE	WATER CONTENT: Plastic & Liquid Limits (%), Water Content (%), NP Nonplastic	GRADATION %: GRAVEL	SAND	FINES	DYNAMIC PENETRATION RESISTANCE, BLOW/0.3m: Nat Vane (kPa), Rem Vane (kPa), Pocket Pen (kPa), Q, U	ADDITIONAL OBSERVATIONS	CONSTRUCTION AND INSTALLATION DETAILS
21	BL LS250	Sonic Drilling	(SC) gravelly CLAYEY SAND, fine to medium, low plasticity fines, fine rounded to subrounded gravel; grey; wet, dense, Till like.	SC			SA 20	GS										
22							SA 21	GS										
23			(SM) SILTY SAND, fine to medium; grey; wet, dense.	SM		22.86	SA 22	GS										
			(GP) GRAVEL, fine to coarse, poorly graded, subangular to angular, some sand, trace fines; grey; Probable bedrock.	GP		23.47												
24			End of hole at 23.93 m.															
25																		
26																		
27																		
28																		
29																		
30																		

Draft

DEPTH SCALE: 1:51

HAMMER TYPE:

REV:

LOGGED: Dwayne Mackie DATE: May 02, 2024

CHECKED: DATE:

APPENDIX

D SONIC CORE PHOTOS

Draft for Client Review

PHOTO TABLE

Photo log	Description
 	SBH24-01 Run#1 Depth: 0.0m - 1.52m FILL – Sandy gravel, with cobbles and boulders.
	SBH24-01 Run#2 Depth: 1.52m – 3.05m PEAT, brown; very soft.



SBH24-01

Run#3

Depth:
3.05m – 4.57m

PEAT, brown;
very soft.



SBH24-01

Run#4

Depth:
4.57m – 6.10m

PEAT, brown;
very soft.

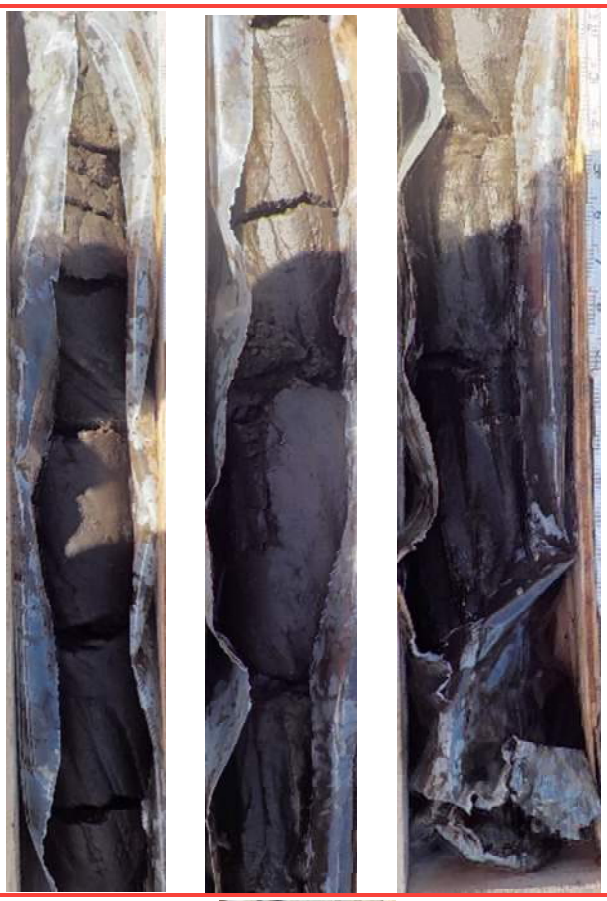

SBH24-01

Run#5

Depth:
6.10m – 7.62m

PEAT, brown;
very soft.



SBH24-01

Run#6

Depth:
7.62m – 9.14m

CLAY, grey,
very soft.



SBH24-01

Run#7

Depth:
9.14m – 10.67m

CLAY, grey,
very soft.

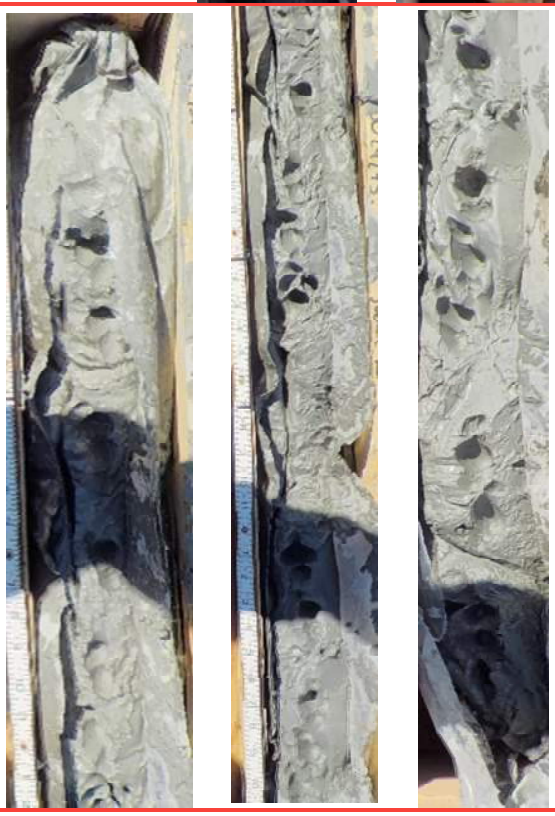

SBH24-01

Run#8

Depth:
10.67m –
12.19m

CLAY, grey,
very soft.



SBH24-01

Run#9

Depth:
12.19m –
13.78m

CLAY, grey,
very soft.

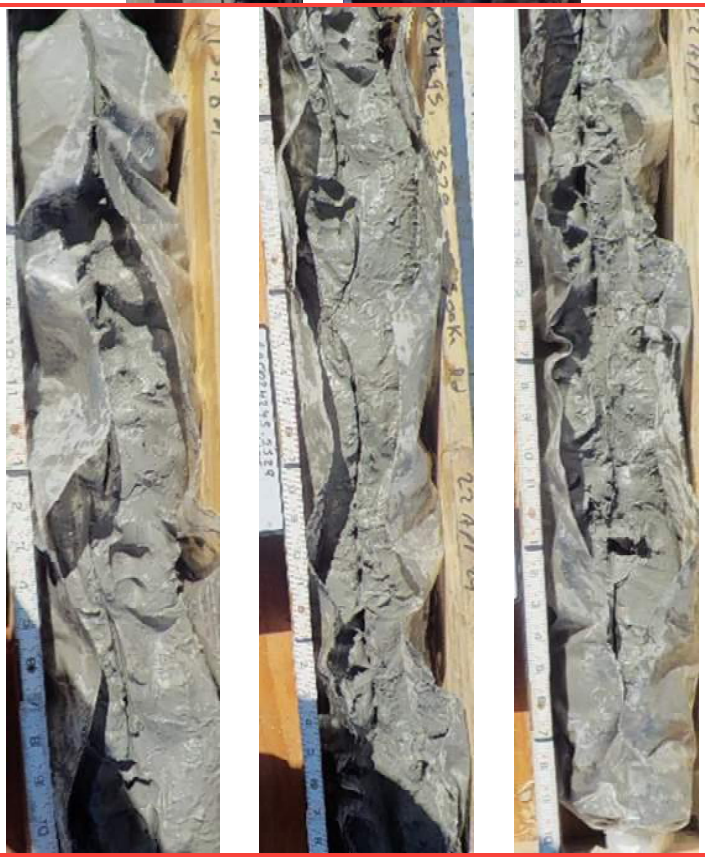

SBH24-01

Run#10

Depth:
13.72m –
15.24m

CLAY, grey,
very soft.



SBH24-01

Run#11

Depth:
15.24m – 16.76m

CLAY, grey, very soft

Switched DCPT to end of hole at 25.66m.



SBH24-02

Run#1

Depth:
0.0m - 1.52m

FILL – Sandy gravel, with cobbles and boulders.

	SBH24-02 Run#2 Depth: 1.52m – 3.05m FILL – Sandy gravel, with cobbles and boulders. PEAT, brown; very soft.
	SBH24-02 Run#3 Depth: 3.05m – 4.57m PEAT, brown; very soft.



SBH24-02

Run#4

Depth:
4.57m – 6.10m

PEAT, brown;
very soft.



SBH24-02

Run#5

Depth:
6.10m – 7.62m

PEAT, brown;
very soft

CLAY, grey,
firm.



SBH24-02

Run#6

Depth:
7.62m – 9.14m

CLAY, grey, firm.

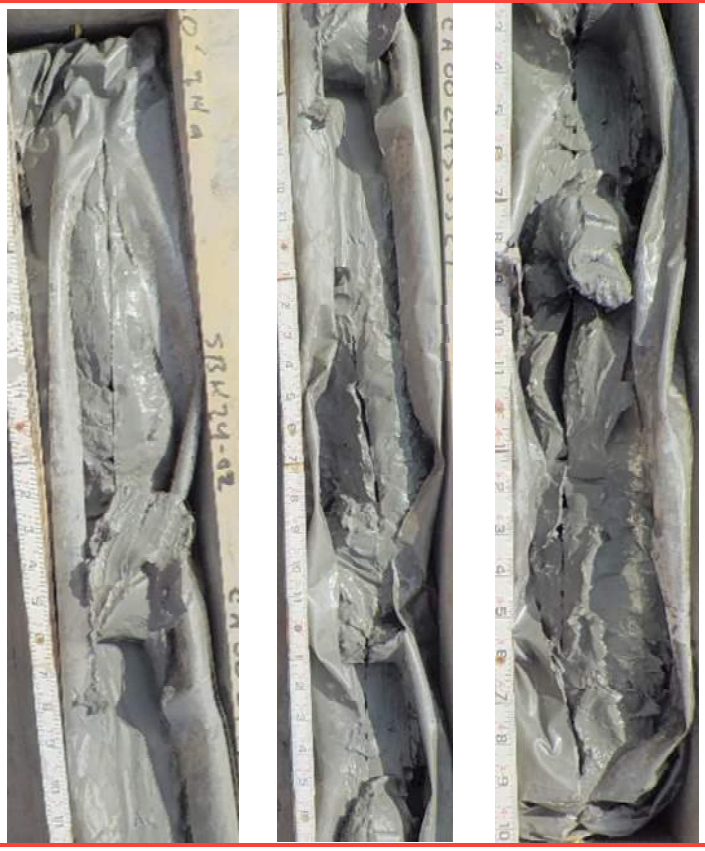

SBH24-02

Run#7

Depth:
9.14m – 10.67m

CLAY, grey, firm.



SBH24-02

Run#8

Depth: 10.67m – 12.19m

CLAY, grey, firm to very soft

Note: Run#9 and #10 was highly disturbed and no recovery.



SBH24-02

Run#11

Depth: 15.24m – 16.76m

CLAY, grey, very soft.



SBH24-02

Run#12

Depth:
16.76m –
18.29m

CLAY, grey,
very soft.



SBH24-02

Run#13

Depth:
18.29m –
19.81m

CLAY, grey,
very soft to
firm.



SBH24-02

Run#14

Depth:
19.81m –
21.34m

SILTY
CLAY/CLAY,
grey, soft.



SBH24-02

Run#15

Depth:
21.34m –
22.86m

SILTY
CLAY/CLAY,
grey, soft to
firm.

	SBH24-02 Run#16 Depth: 22.86m – 24.38m SILTY CLAY/CLAY, grey, soft to firm.
	SBH24-02 Run#17 Depth: 24.38m – 25.91m Gravelly SAND, grey, dense SILTY SAND, grey, very dense, Till like. Sandy GRAVEL, grey, very dense, bedrock.

		SBH24-03 Run#1 Depth: 0.0m - 1.52m FILL – Sandy gravel, with cobbles and boulders
		SBH24-03 Run#2 Depth: 1.52m – 3.05m FILL – Sandy gravel, with cobbles and boulders PEAT, brown; very soft.

	SBH24-03 Run#3 Depth: 3.05m – 4.57m PEAT, brown; very soft.
	SBH24-03 Run#4 Depth: 4.57m – 6.10m PEAT, brown; very soft.



SBH24-03

Run#5

Depth:
6.10m – 7.62m

CLAY, grey,
soft to firm.



SBH24-03

Run#6

Depth:
7.62m – 9.14m

CLAY, grey,
soft to firm.

	SBH24-03 Run#7 Depth: 9.14m – 10.67m CLAY, grey, very soft.
	SBH24-03 Run#8 Depth: 10.67m – 12.19m CLAY, grey, very soft to firm.



SBH24-03

Run#9

Depth:
12.19m –
13.78m

CLAY, grey,
soft.



SBH24-03

Run#10

Depth:
13.72m –
15.24m

CLAY, grey,
soft.



SBH24-03

Run#11

Depth:
15.24m –
16.76m

CLAY, grey,
soft.



SBH24-03

Run#12

Depth:
16.76m –
18.29m

CLAY, grey,
soft.



SBH24-03

Run#13

Depth:
18.29m –
19.81m

CLAY, grey,
soft.



SBH24-03

Run#14

Depth:
19.81m –
21.34m

CLAY, grey,
soft.



SBH24-03

Run#15

Depth:
21.34m –
22.86m

SILT/CLAY,
grey, soft to
firm.



SBH24-03

Run#16

Depth:
22.86m –
24.38m

SILTY CLAY,
grey, soft.



SBH24-03

Run#17

Depth:
24.38m –
25.91m

SILTY CLAY,
grey, soft.



SBH24-03

Run#18

Depth:
25.91m –
27.43m

SILTY CLAY,
grey, soft

Gravelly SAND,
grey, dense to
very dense.

	SBH24-04 Run#1 Depth: 0.0m - 1.52m FILL – Sandy gravel, with cobbles and boulders
 	SBH24-04 Run#2 Depth: 1.52m – 3.05m PEAT, brown; soft Silty SAND and GRAEL, grey, loose to compact.

	SBH24-04 Run#3 Depth: 3.05m – 4.57m SAND and SILT, grey, loose to compact.
	SBH24-04 Run#4 Depth: 4.57m – 6.10m PEAT, brown; soft.
	SBH24-04 Run#5 Depth: 6.10m – 7.62m PEAT, brown; soft.

	SBH24-04 Run#6 Depth: 7.62m – 9.14m SILTY CLAY, grey, firm.
  	SBH24-04 Run#7 Depth: 9.14m – 10.67m SILTY CLAY, grey, firm.



SBH24-04

Run#8

Depth:
10.67m –
12.19m

CLAY, grey,
soft.



SBH24-04

Run#9

Depth:
12.19m –
13.78m

CLAY, grey,
soft.

	SBH24-04 Run#10 Depth: 13.72m – 15.24m CLAY, grey, soft.
	SBH24-04 Run#11 Depth: 15.24m – 16.76m CLAY, grey, soft.

	SBH24-04 Run#12 Depth: 16.76m – 18.29m CLAY, grey, soft.
	SBH24-04 Run#13 Depth: 18.29m – 19.81m CLAY, grey, soft.



SBH24-04

Run#14

Depth:
19.81m –
21.34m

CLAY, grey,
soft.



SBH24-04

Run#15

Depth:
21.34m –
22.86m

SILT/CLAY,
grey, soft.



SBH24-04

Run#16

Depth: 22.86m – 24.38m

SILT/CLAY, grey, soft to firm.



SBH24-04

Run#17

Depth: 24.38m – 25.91m

CLAY, grey, soft.



SBH24-04

Run#18

Depth:
25.91m –
27.43m

CLAY, grey,
soft.



SBH24-04

Run#19

Depth:
27.43m –
28.96m

SILT/CLAY,
grey, soft to
firm.



SBH24-04

Run#20

Depth: 28.96m – 30.48m

SILT/CLAY, grey, soft to firm

Silty SAND, grey, compact to dense.



SBH24-04

Run#21

Depth: 30.48m – 32.00m

SAND, grey, compact to dense

Gravelly clayey SAND, compact to dense.

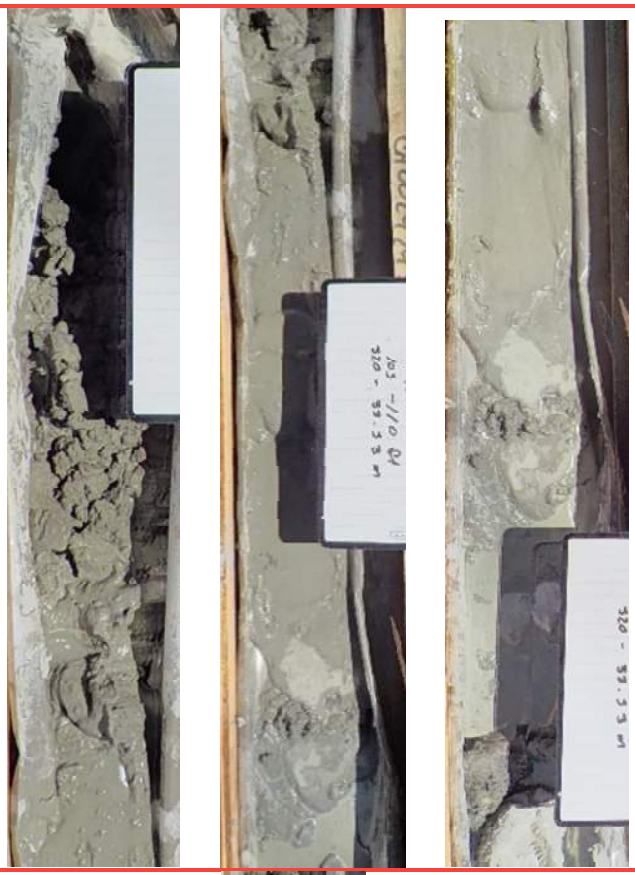	SBH24-04 Run#22 Depth: 32.00m – 33.53m SAND, grey, compact to dense.
	SBH24-04 Run#23 Depth: 33.53m – 35.05m Silty SAND, grey, dense Sandy GRAVEL, grey, very dense. Possible bedrock.

	SBH24-05 Run#1 Depth: 0.0m - 1.52m FILL – Sandy gravel, with cobbles and boulders.
	SBH24-05 Run#2 Depth: 1.52m – 3.05m GRAVEL, brown, dense.

	SBH24-05 Run#3 Depth: 3.05m – 4.57m GRAVEL, brown, dense Gravelly clayey SAND, grey, dense.
	SBH24-05 Run#4 Depth: 4.57m – 6.10m PEAT, brown; soft.



SBH24-05

Run#5

Depth:
6.10m – 7.62m

CLAY, grey,
very soft.



SBH24-05

Run#6

Depth:
7.62m – 9.14m

CLAY, grey,
very soft.

	SBH24-05 Run#7 Depth: 9.14m – 10.67m CLAY, grey, soft.
	SBH24-05 Run#8 Depth: 10.67m – 12.19m CLAY, grey, soft.

	SBH24-05 Run#9 Depth: 12.19m – 13.78m CLAY, grey, soft.
	SBH24-05 Run#10 Depth: 13.72m – 15.24m SILT/CLAY, grey, soft to firm.



SBH24-05

Run#11

Depth:
15.24m –
16.76m

CLAY, grey,
soft.



SBH24-05

Run#12

Depth:
16.76m –
18.29m

CLAY, grey,
soft.

	SBH24-05 Run#13 Depth: 18.29m – 19.81m SILT/CLAY, grey, soft to firm.
	SBH24-05 Run#14 Depth: 19.81m – 21.34m CLAY, grey, soft.



SBH24-05

Run#15

Depth:
21.34m –
22.86m

CLAY, grey,
soft.



SBH24-05

Run#16

Depth:
22.86m –
24.38m

SILT/CLAY,
grey, soft to
firm.

	SBH24-05 Run#17 Depth: 24.38m – 25.91m SILT/CLAY, grey, soft to firm.
	SBH24-05 Run#18 Depth: 25.91m – 27.43m SILT/CLAY, grey, soft to firm.

	SBH24-05 Run#20 Depth: 28.96m – 30.48m SILT, grey, firm to stiff.
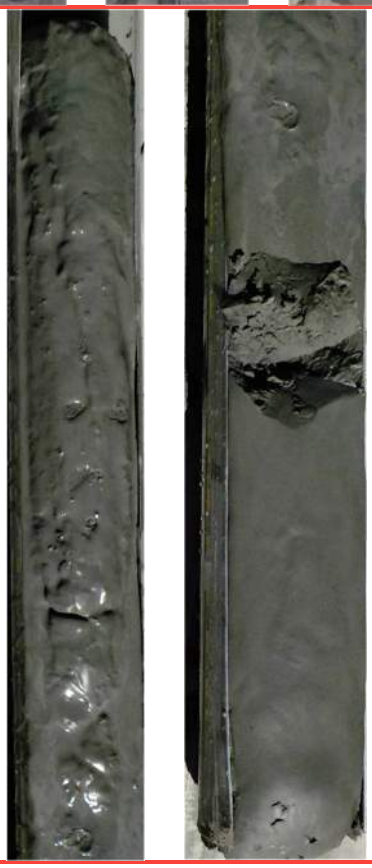	SBH24-05 Run#21 Depth: 30.48m – 32.00m SILT, grey, firm to stiff.

	SBH24-05 Run#22 Depth: 32.00m – 35.05m Sandy SILT, grey, stiff to very stiff.
	SBH24-05 Run#22 Depth: 32.00m – 35.05m Sandy SILT, grey, stiff to very stiff Gravelly clayey SAND, grey, very dense Gravel, probable bedrock.

	SBH24-06 Run#1 Depth: 0.0m - 1.52m FILL – Sandy gravel, with cobbles and boulders.
	SBH24-06 Run#2 Depth: 1.52m – 3.05m SAND and GRAVEL, brown, compact to dense.
	SBH24-06 Run#3 Depth: 3.05m – 4.57m Silty SAND and GRAVEL, brown, compact to dense.

	SBH24-06 Run#4 Depth: 4.57m – 6.10m PEAT, brown; very soft.
	SBH24-06 Run#5 Depth: 6.10m – 7.62m PEAT, brown; very soft.
	SBH24-06 Run#6 Depth: 7.62m – 9.14m SILT/CLAY, grey, firm to soft..



SBH24-06

Run#7

Depth:
9.14m – 10.67m

SILT/CLAY, grey, firm to soft..



SBH24-06

Run#8

Depth:
10.67m – 12.19m

SILT/CLAY, grey, firm to soft..



SBH24-06

Run#9

Depth:
12.19m –
13.78m

SILT/CLAY,
grey, firm to
soft.



SBH24-06

Run#10

Depth:
13.72m –
15.24m

CLAY, grey,
soft.



SBH24-06

Run#11

Depth:
15.24m –
16.76m

CLAY, grey,
soft.



SBH24-06

Run#12

Depth:
16.76m –
18.29m

SILT/CLAY,
grey, firm to
soft.

	SBH24-06 Run#13 Depth: 18.29m – 19.81m SILT/CLAY, grey, firm to soft.
	SBH24-06 Run#14 Depth: 19.81m – 21.34m SILT/CLAY, grey, firm to soft.



SBH24-06

Run#15

Depth:
21.34m –
22.86m

CLAY, grey,
soft to firm.



SBH24-06

Run#16

Depth:
22.86m –
24.38m

CLAY, grey,
soft to firm.

	SBH24-06 Run#17 Depth: 24.38m – 25.91m CLAY, grey, soft to firm.
	SBH24-06 Run#18 Depth: 25.91m – 27.43m CLAY, grey, soft to firm Gravely SILTY SAND, grey, dense.

	SBH24-06 Run#19 Depth: 27.43m – 28.96m SAND, grey, dense Sandy SILTY CLAY, grey, hard.
	SBH24-06 Run#20 Depth: 28.96m – 30.48m SAND, grey, compact to dense.



SBH24-06

Run#21

Depth:
30.48m –
33.53m

SAND, grey,
compact to
dense

Sandy SILTY
CLAY, grey,
stiff

Gravelly SILTY
SAND, grey,
dense.



SBH24-06

Run#21

Depth:
30.48m –
33.53m

SAND, grey,
compact to
dense

Sandy SILTY
CLAY, grey,
stiff

Gravelly SILTY
SAND, grey,
dense.



SBH24-06

Run#22

Depth:
33.53m –
35.84m

Gravelly SILTY SAND, grey, dense

Sandy SILTY CLAY, grey, hard

Gravelly SILTY SAND, grey, dense, Till like.



SBH24-06

Run#22

Depth:
33.53m –
35.84m

Gravelly SILTY SAND, grey, dense

Sandy SILTY CLAY, grey, hard

Gravelly SILTY SAND, grey, dense, Till like.

	SBH24-07 Run#1 Depth: 0.0m - 1.52m FILL – Sandy gravel, grey, dense.
	SBH24-07 Run#2 Depth: 1.52m – 3.05m FILL – Sandy gravel, grey, dense.
	SBH24-07 Run#3 Depth: 3.05m – 4.57m FILL – Gravelly SAND, grey, dense.

	SBH24-07 Run#4 Depth: 4.57m – 6.10m FILL – Gravelly SAND, grey, dense PEAT, brown; very soft.
	SBH24-07 Run#5 Depth: 6.10m – 7.62m PEAT, brown; very soft.

	SBH24-07 Run#6 Depth: 7.62m – 9.14m PEAT, brown; very soft CLAY, grey, very soft.
	SBH24-07 Run#7 Depth: 9.14m – 10.67m SILT/CLAY, grey, soft to firm.

	SBH24-07 Run#8 Depth: 10.67m – 12.19m SILT/CLAY, grey, soft to firm.
	SBH24-07 Run#9 Depth: 12.19m – 13.78m CLAY, grey, soft.

	SBH24-07 Run#10 Depth: 13.72m – 15.24m CLAY, grey, soft.
	SBH24-07 Run#11 Depth: 15.24m – 16.76m SILT/CLAY, grey, soft to firm.

	SBH24-07 Run#12 Depth: 16.76m – 18.29m SILT/CLAY, grey, soft to firm.
	SBH24-07 Run#13 Depth: 18.29m – 19.81m SILT/CLAY, grey, soft to firm Gravelly clayey SAND, grey, dense, Till like.

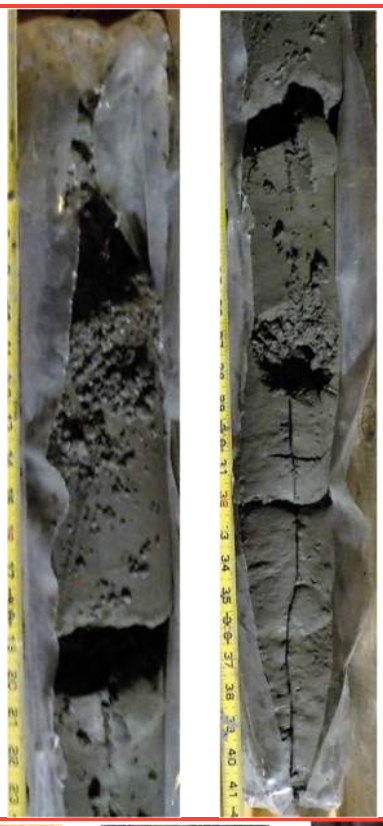	SBH24-07 Run#14 Depth: 19.81m – 21.34m Gravelly clayey SAND, grey, dense, Till like.
	SBH24-07 Run#15 Depth: 21.34m – 22.86m Gravelly clayey SAND, grey, dense, Till like.



SBH24-07

Run#16

Depth:
22.86m –
24.38m

Silty SAND,
grey, dense

GRAVEL, grey,
probable
bedrock.

APPENDIX

E TABLE OF MEASURED SHEAR STRENGTHS

Draft for Client Review

BOREHOLE	DEPTH (M)	GENERAL STRATIGRAPHY	PEAK UNDRAIN SHEAR STRENGTH (KPA)	RESIDUAL UNDRAIN SHEAR STRENGTH (KPA)	SENSITIVITY
SBH24-01	4.3	Peat	32.5	18.1	1.8
SBH24-01	6.4	Peat	28.9	10.9	2.7
SBH24-01	7.9	Clay	50.7	21.7	2.3
SBH24-01	9.5	Clay	50.7	18.1	2.8
SBH24-01	11.0	Clay	57.9	18.1	3.2
SBH24-01	12.5	Clay	39.8	0	NA
SBH24-01	14.0	Clay	32.6	21.7	1.5
SBH24-01	15.6	Clay	47.0	32.6	1.4
SBH24-01	17.1	Clay	21.7	18.1	1.2
SBH24-02	4.9	Peat	43.42	21.71	2.0
SBH24-02	6.4	Peat	25.33	7.24	3.5
SBH24-02	11.0	Clay	10.85	7.24	1.5
SBH24-02	12.5	Clay	21.71	10.85	2.0
SBH24-02	17.8	Clay	32.56	14.47	2.3
SBH24-02	19.2	Clay	21.71	21.71	1.0
SBH24-02	20.9	Clay	43.42	28.94	1.5
SBH24-02	23.2	Clay	65.12	43.42	1.5
SBH24-03	4.9	Peat	32.56	21.71	1.5
SBH24-03	7.9	Clay	21.71	14.47	1.5
SBH24-03	9.5	Clay	43.42	21.71	2.0
SBH24-03	11.0	Clay	10.85	7.74	1.4
SBH24-03	12.5	Clay	21.71	18.71	1.2
SBH24-03	15.7	Clay	18.09	0	NA
SBH24-03	18.3	Clay	14.47	10.85	1.3
SBH24-03	20.1	Clay	25.33	21.71	1.2
SBH24-03	21.6	Clay	32.56	21.71	1.5
SBH24-03	24.1	Clay	32.56	21.91	1.5
SBH24-04	4.9	Peat	54.27	32.56	1.7
SBH24-04	6.4	Peat	65.15	21.71	3.0
SBH24-04	9.5	Clay	14.75	7.37	2.0
SBH24-04	11.0	Clay	22.12	11.06	2.0
SBH24-04	12.5	Clay	11.06	5.9	1.9

BOREHOLE	DEPTH (M)	GENERAL STRATIGRAPHY	PEAK UNDRAIN SHEAR STRENGTH (KPA)	RESIDUAL UNDRAIN SHEAR STRENGTH (KPA)	SENSITIVITY
SBH24-04	14.0	Clay	19.91	8.85	2.2
SBH24-04	15.6	Clay	25.81	14.75	1.7
SBH24-04	17.1	Clay	16.22	4.42	3.7
SBH24-04	18.6	Clay	26.55	7.37	3.6
SBH24-04	20.1	Clay	34.66	14.75	2.3
SBH24-04	21.6	Clay	29.5	7.37	4.0
SBH24-04	23.2	Clay	51.62	7.37	7.0
SBH24-04	24.7	Clay	55.31	14.75	3.7
SBH24-04	26.2	Clay	57.89	14.47	4.0
SBH24-04	27.7	Clay	65.12	36.18	1.8
SBH24-04	29.3	Clay	50.65	18.09	2.8
SBH24-05	4.9	Peat	73.36	36.18	2.0
SBH24-05	7.9	Clay	20.65	5.9	3.5
SBH24-05	11.0	Clay	14.75	3.69	4.0
SBH24-05	14.0	Clay	25.81	14.75	1.7
SBH24-05	17.1	Clay	25.81	9.59	2.7
SBH24-05	20.1	Clay	18.44	7.37	2.5
SBH24-05	23.2	Clay	39.9	9.59	4.2
SBH24-05	26.2	Clay	22.12	7.37	3.0
SBH24-05	29.3	Clay	44.25	7.37	6.0
SBH24-06	6.4	Peat	21.71	18.09	1.2
SBH24-06	9.5	Clay	16.96	9.59	1.8
SBH24-06	12.5	Clay	14.75	8.85	1.7
SBH24-06	18.6	Clay	21.39	3.69	5.8
SBH24-06	21.6	Clay	36.86	13.27	2.8
SBH24-06	24.7	Clay	75.98	21.71	3.5
SBH24-07	7.9	Peat	44.25	35	1.3
SBH24-07	11.0	Clay	16.96	5.16	3.3
SBH24-07	14.0	Clay	23.6	6.64	3.6
SBH24-07	17.1	Clay	29.5	22.12	1.3

APPENDIX

F LAB TESTING

Draft for Client Review

LIQUID LIMIT, PLASTIC LIMIT AND PLASTICITY INDEX

ASTM D4318

Method A - Multipoint Test

Test Request #	V24-039	Project Number:	CA0024295.3529
Client:	West Shore Environment Services	Project Location:	Langford BC
Project Name:	Sooke Rd	Sample Location:	SBH24-01
Source:		Sample No.:	SA06
Soil Description:		Type:	GS
		Depth (m):	8.23 - 8.53

Specimen Reference	NA	Specimen Depth	NA	Date of Test	13 May 2024
Specimen Description	NA				

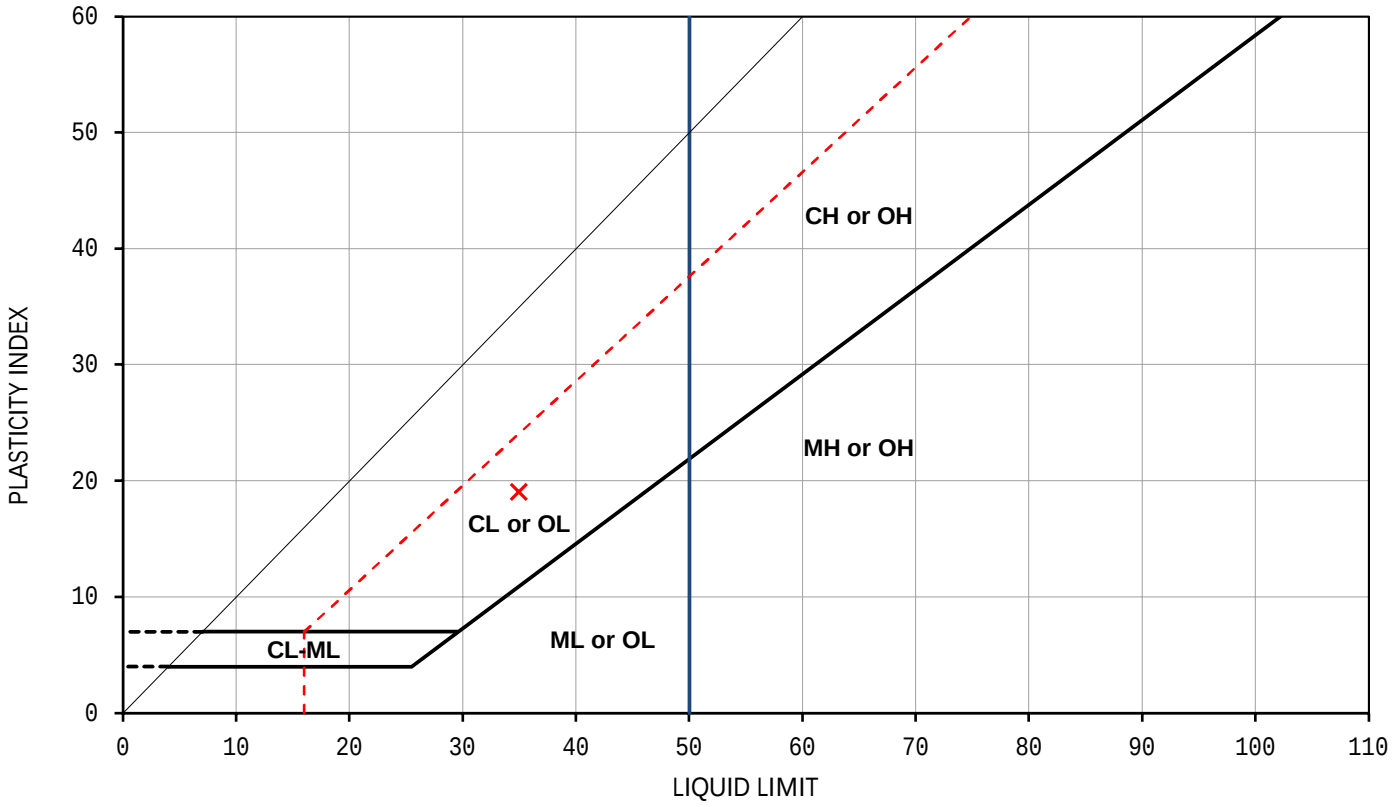

Sample Location	Sample / Specimen Number	Top Depth (m)	Base Depth (m)	Percent Passing #40 Sieve	Natural Water Content (%)	Liquid Limit	Plastic Limit	Plasticity Index	Liquidity Index
SBH24-01	SA06	8.23	8.53	ND	45.2	35	16	19	1.54

NP = Non-Plastic
ND = Not Determined

Test Preparation

Notes:

Disclaimer:

The laboratory testing services reported herein have been performed in accordance with the terms of a contract with WSP's client, and with the recognized standards indicated in this report, or local industry practice. This laboratory testing services report is for the sole use of WSP's client, relates only to the sample(s) tested and does not represent any (actual or implied) interpretation or opinion regarding specification compliance or materials suitability for any specific purpose.

Tested by: KMasongsong **Date:** 13 May 2024

Checked by: KMasongsong **Date:** 28 May 2024

Reviewed by: DMackie **Date:** 31 May 2024

WSP Canada Inc.
475B Tennyson Place
Victoria, British Columbia, V8Z 6S8
Canada
[+1] (250) 383 9702

LIQUID LIMIT, PLASTIC LIMIT AND PLASTICITY INDEX

ASTM D4318

Method A - Multipoint Test

Test Request #	V24-039	Project Number:	CA0024295.3529
Client:	West Shore Environment Services	Project Location:	Langford BC
Project Name:	Sooke Rd	Sample Location:	SBH24-02
Source:		Sample No.:	SA05
Soil Description:		Type:	GS
		Depth (m):	7.16 - 7.32

Specimen Reference	NA	Specimen Depth	NA	Date of Test	14 May 2024
Specimen Description	NA				

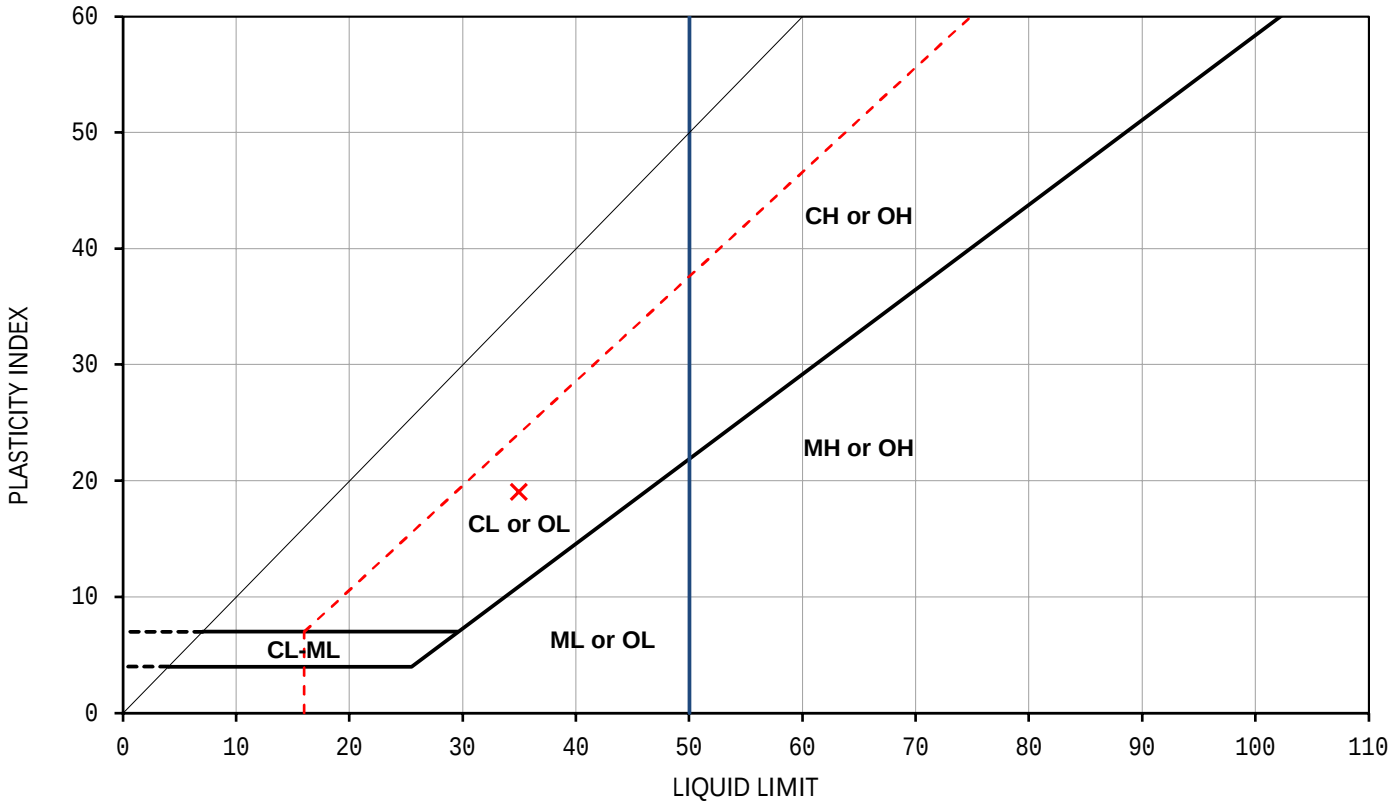

Sample Location	Sample / Specimen Number	Top Depth (m)	Base Depth (m)	Percent Passing #40 Sieve	Natural Water Content (%)	Liquid Limit	Plastic Limit	Plasticity Index	Liquidity Index
SBH24-02	SA05	7.16	7.32	ND	46.5	35	16	19	1.61

NP = Non-Plastic
ND = Not Determined

Test Preparation

Notes:

Disclaimer:

The laboratory testing services reported herein have been performed in accordance with the terms of a contract with WSP's client, and with the recognized standards indicated in this report, or local industry practice. This laboratory testing services report is for the sole use of WSP's client, relates only to the sample(s) tested and does not represent any (actual or implied) interpretation or opinion regarding specification compliance or materials suitability for any specific purpose.

Tested by: KMasongsong **Date:** 14 May 2024

Checked by: KMasongsong **Date:** 28 May 2024

Reviewed by: DMackie **Date:** 31 May 2024

WSP Canada Inc.
475B Tennyson Place
Victoria, British Columbia, V8Z 6S8
Canada
[+1] (250) 383 9702

LIQUID LIMIT, PLASTIC LIMIT AND PLASTICITY INDEX

ASTM D4318

Method A - Multipoint Test

Test Request #	V24-039	Project Number:	CA0024295.3529
Client:	West Shore Environment Services	Project Location:	Langford BC
Project Name:	Sooke Rd	Sample Location:	SBH24-02
Source:		Sample No.:	SA08
Soil Description:		Type:	GS
		Depth (m):	10.97 - 11.13

Specimen Reference	NA	Specimen Depth	NA	Date of Test	14 May 2024
Specimen Description	NA				

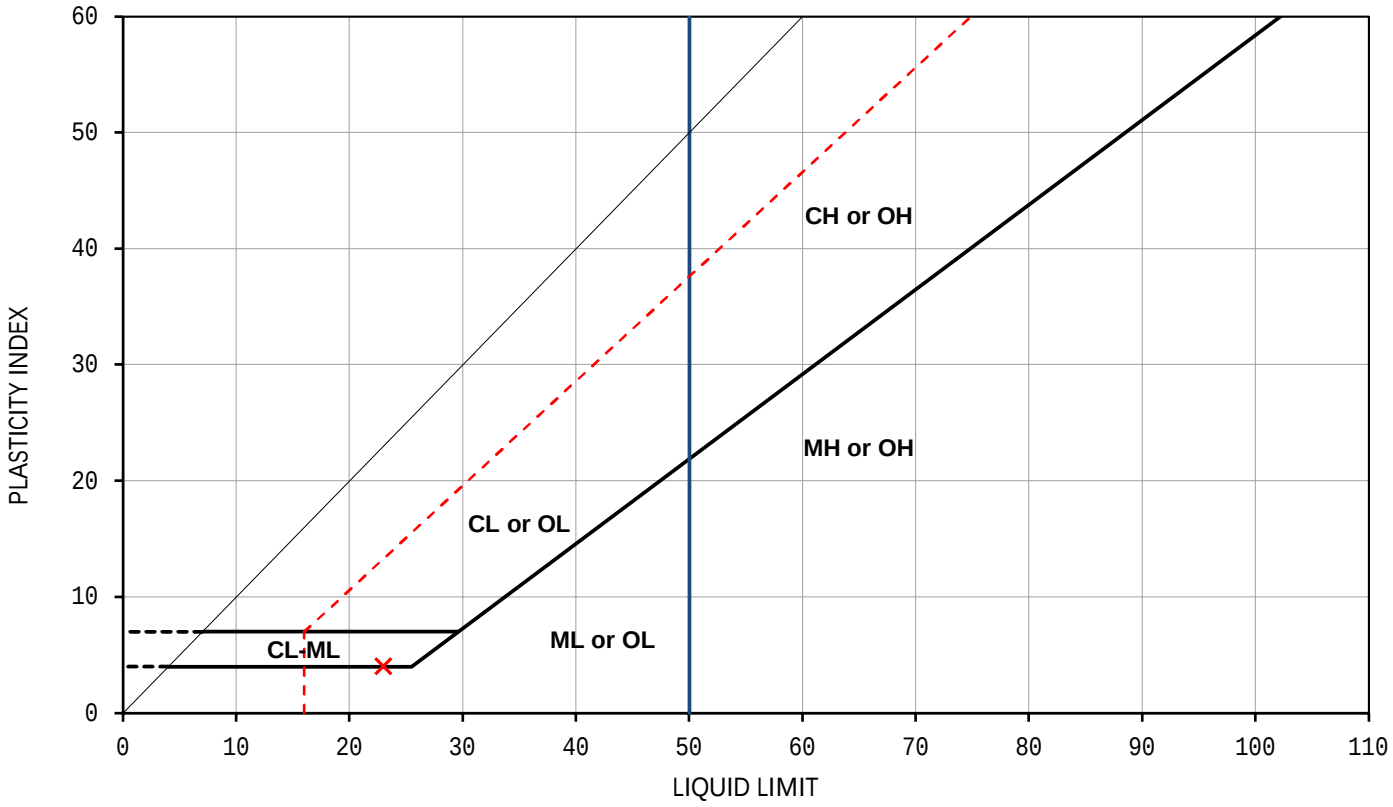

Sample Location	Sample / Specimen Number	Top Depth (m)	Base Depth (m)	Percent Passing #40 Sieve	Natural Water Content (%)	Liquid Limit	Plastic Limit	Plasticity Index	Liquidity Index
SBH24-02	SA08	10.97	11.13	ND	25.0	23	19	4	1.50

NP = Non-Plastic
ND = Not Determined

Test Preparation

Notes:

Disclaimer:

The laboratory testing services reported herein have been performed in accordance with the terms of a contract with WSP's client, and with the recognized standards indicated in this report, or local industry practice. This laboratory testing services report is for the sole use of WSP's client, relates only to the sample(s) tested and does not represent any (actual or implied) interpretation or opinion regarding specification compliance or materials suitability for any specific purpose.

Tested by: KMasongsong **Date:** 14 May 2024

Checked by: KMasongsong **Date:** 28 May 2024

Reviewed by: DMackie **Date:** 31 May 2024

WSP Canada Inc.
475B Tennyson Place
Victoria, British Columbia, V8Z 6S8
Canada
[+1] (250) 383 9702

LIQUID LIMIT, PLASTIC LIMIT AND PLASTICITY INDEX

ASTM D4318

Method A - Multipoint Test

Test Request #	V24-039	Project Number:	CA0024295.3529
Client:	West Shore Environment Services	Project Location:	Langford BC
Project Name:	Sooke Rd	Sample Location:	SBH24-02
Source:		Sample No.:	SA11
Soil Description:		Type:	GS
		Depth (m):	16.46 - 16.61

Specimen Reference	NA	Specimen Depth	NA	Date of Test	15 May 2024
Specimen Description	NA				

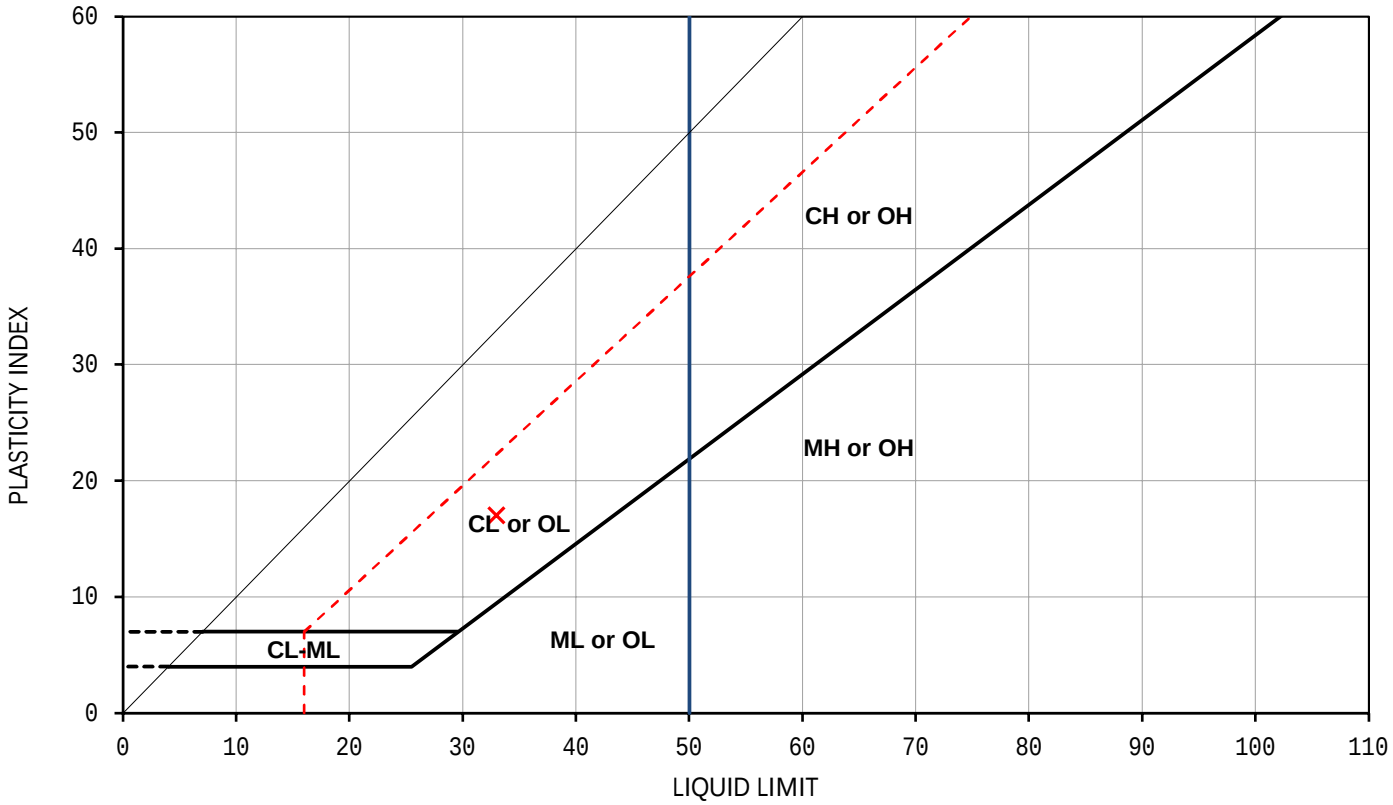

Sample Location	Sample / Specimen Number	Top Depth (m)	Base Depth (m)	Percent Passing #40 Sieve	Natural Water Content (%)	Liquid Limit	Plastic Limit	Plasticity Index	Liquidity Index
SBH24-02	SA11	16.46	16.61	ND	36.8	33	16	17	1.22

NP = Non-Plastic
ND = Not Determined

Test Preparation

Notes:

Disclaimer:

The laboratory testing services reported herein have been performed in accordance with the terms of a contract with WSP's client, and with the recognized standards indicated in this report, or local industry practice. This laboratory testing services report is for the sole use of WSP's client, relates only to the sample(s) tested and does not represent any (actual or implied) interpretation or opinion regarding specification compliance or materials suitability for any specific purpose.

Tested by: KMasongsong **Date:** 15 May 2024

Checked by: KMasongsong **Date:** 28 May 2024

Reviewed by: DMackie **Date:** 31 May 2024

WSP Canada Inc.
475B Tennyson Place
Victoria, British Columbia, V8Z 6S8
Canada
[+1] (250) 383 9702

LIQUID LIMIT, PLASTIC LIMIT AND PLASTICITY INDEX

ASTM D4318

Method A - Multipoint Test

Test Request #	V24-039	Project Number:	CA0024295.3529
Client:	West Shore Environment Services	Project Location:	Langford BC
Project Name:	Sooke Rd	Sample Location:	SBH24-03
Source:		Sample No.:	SA10
Soil Description:		Type:	GS
		Depth (m):	10.36 - 10.52

Specimen Reference	NA	Specimen Depth	NA	Date of Test	15 May 2024
Specimen Description	NA				

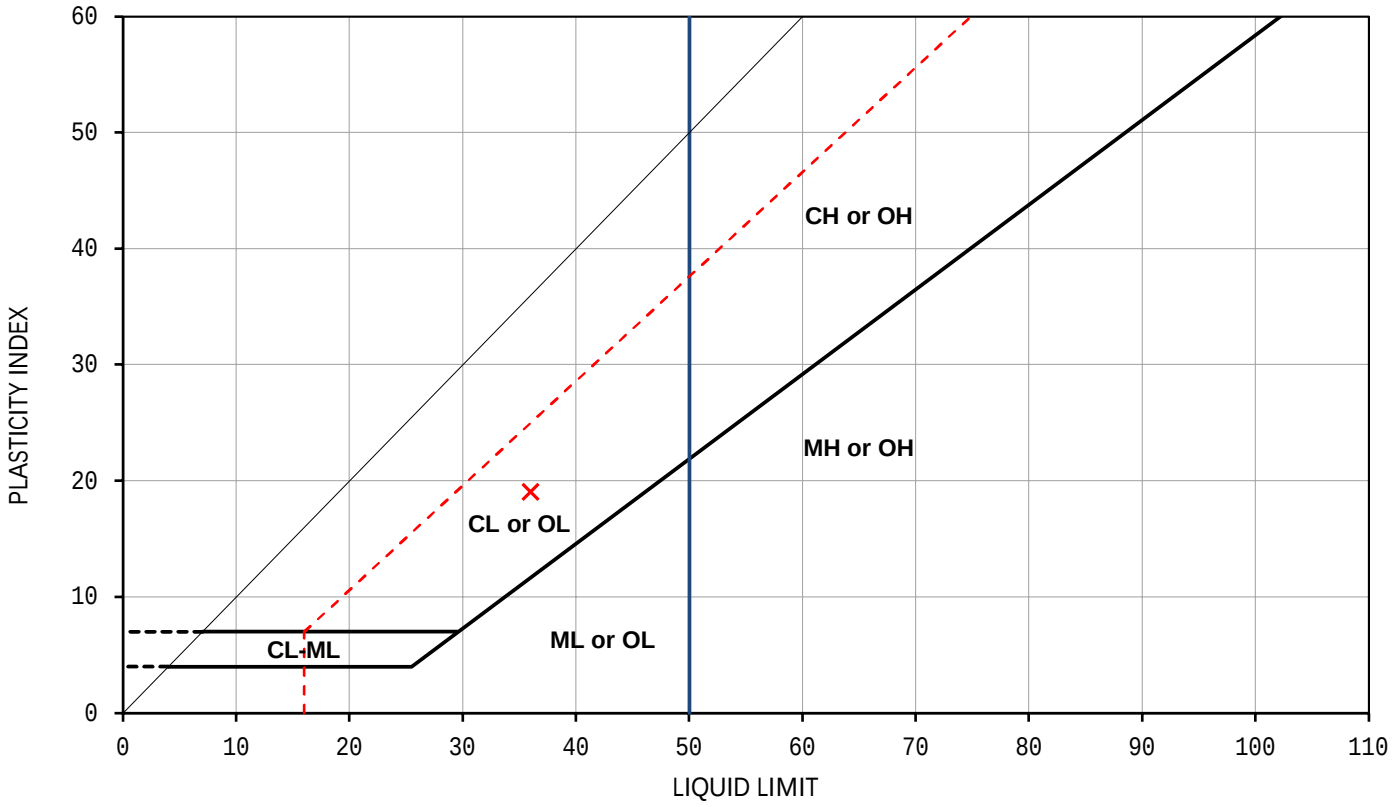

Sample Location	Sample / Specimen Number	Top Depth (m)	Base Depth (m)	Percent Passing #40 Sieve	Natural Water Content (%)	Liquid Limit	Plastic Limit	Plasticity Index	Liquidity Index
SBH24-03	SA10	10.36	10.52	ND	43.5	36	17	19	1.39

NP = Non-Plastic
ND = Not Determined

Test Preparation

Notes:

Disclaimer:

The laboratory testing services reported herein have been performed in accordance with the terms of a contract with WSP's client, and with the recognized standards indicated in this report, or local industry practice. This laboratory testing services report is for the sole use of WSP's client, relates only to the sample(s) tested and does not represent any (actual or implied) interpretation or opinion regarding specification compliance or materials suitability for any specific purpose.

Tested by: KMasongsong **Date:** 15 May 2024

Checked by: KMasongsong **Date:** 28 May 2024

Reviewed by: DMackie **Date:** 31 May 2024

WSP Canada Inc.
475B Tennyson Place
Victoria, British Columbia, V8Z 6S8
Canada
[+1] (250) 383 9702

LIQUID LIMIT, PLASTIC LIMIT AND PLASTICITY INDEX

ASTM D4318

Method A - Multipoint Test

Test Request #	V24-039	Project Number:	CA0024295.3529
Client:	West Shore Environment Services	Project Location:	Langford BC
Project Name:	Sooke Rd	Sample Location:	SBH24-03
Source:		Sample No.:	SA15
Soil Description:		Type:	GS
		Depth (m):	16.15 - 16.31

Specimen Reference	NA	Specimen Depth	NA	Date of Test	16 May 2024
Specimen Description	NA				

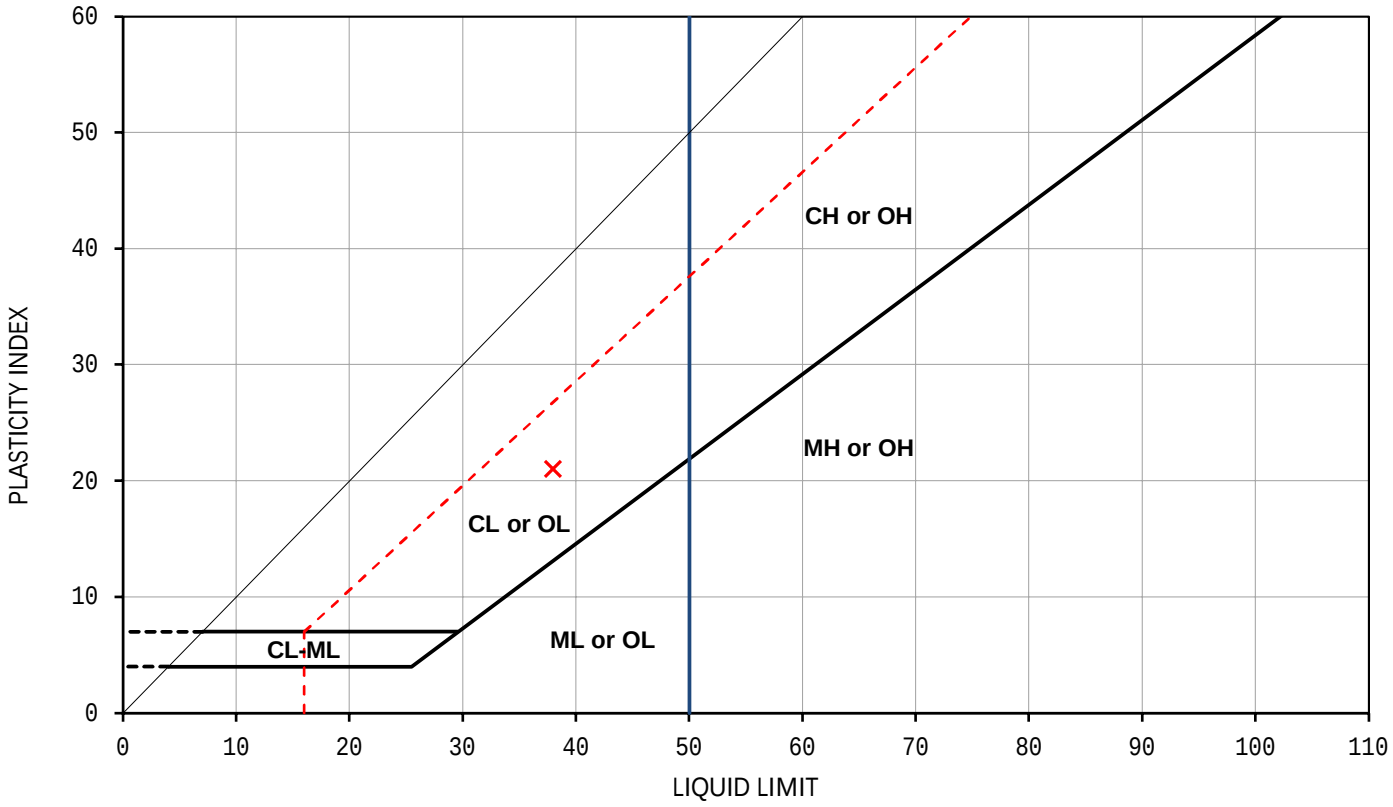

Sample Location	Sample / Specimen Number	Top Depth (m)	Base Depth (m)	Percent Passing #40 Sieve	Natural Water Content (%)	Liquid Limit	Plastic Limit	Plasticity Index	Liquidity Index
SBH24-03	SA15	16.15	16.31	ND	47.7	38	17	21	1.46

NP = Non-Plastic
ND = Not Determined

Test Preparation

Notes:

Disclaimer:

The laboratory testing services reported herein have been performed in accordance with the terms of a contract with WSP's client, and with the recognized standards indicated in this report, or local industry practice. This laboratory testing services report is for the sole use of WSP's client, relates only to the sample(s) tested and does not represent any (actual or implied) interpretation or opinion regarding specification compliance or materials suitability for any specific purpose.

Tested by: KMasongsong **Date:** 16 May 2024

Checked by: KMasongsong **Date:** 28 May 2024

Reviewed by: DMackie **Date:** 31 May 2024

WSP Canada Inc.
475B Tennyson Place
Victoria, British Columbia, V8Z 6S8
Canada
[+1] (250) 383 9702

LIQUID LIMIT, PLASTIC LIMIT AND PLASTICITY INDEX

ASTM D4318

Method A - Multipoint Test

Test Request #	V24-039	Project Number:	CA0024295.3529
Client:	West Shore Environment Services	Project Location:	Langford BC
Project Name:	Sooke Rd	Sample Location:	SBH24-03
Source:		Sample No.:	SA22
Soil Description:		Type:	GS
		Depth (m):	25.30 - 25.45

Specimen Reference	NA	Specimen Depth	NA	Date of Test	17 May 2024
Specimen Description	NA				

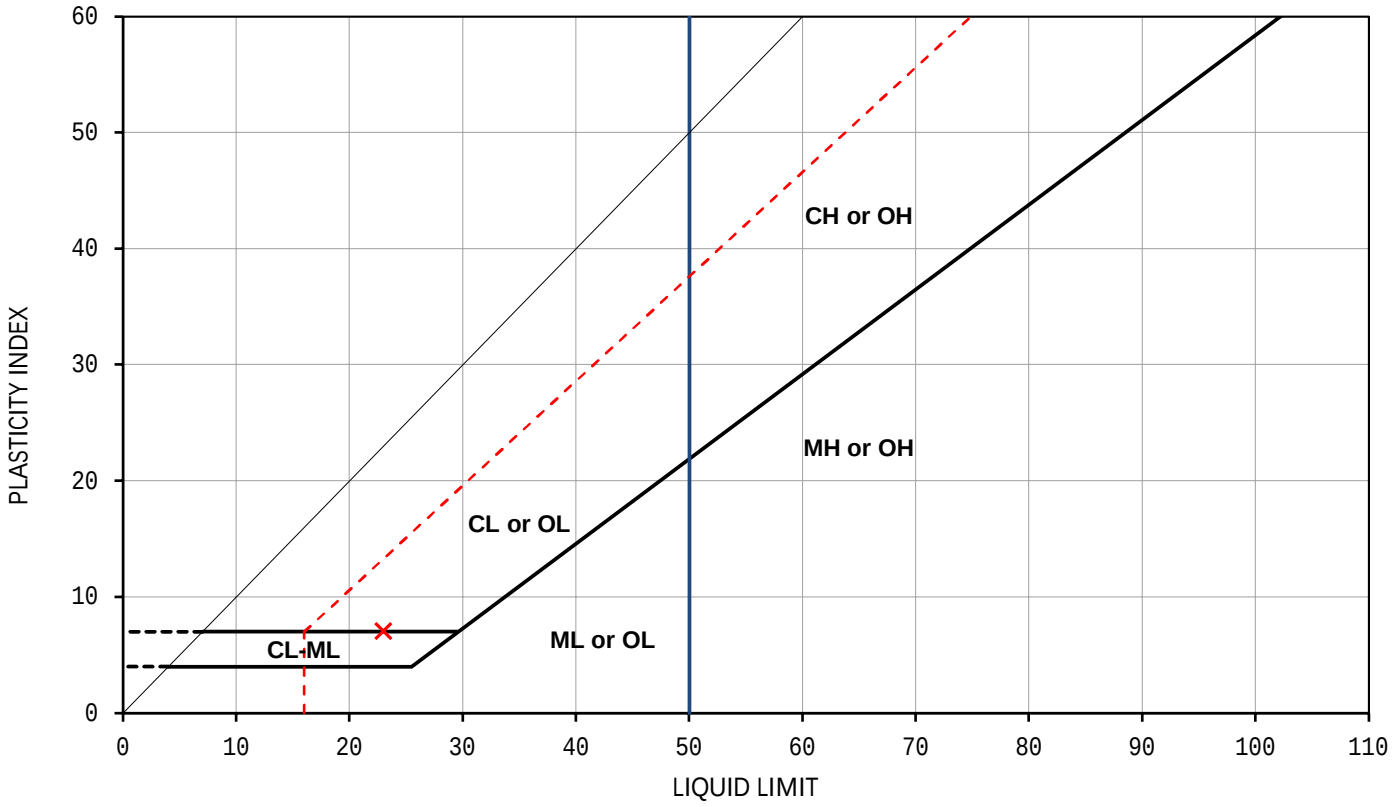

Sample Location	Sample / Specimen Number	Top Depth (m)	Base Depth (m)	Percent Passing #40 Sieve	Natural Water Content (%)	Liquid Limit	Plastic Limit	Plasticity Index	Liquidity Index
SBH24-03	SA22	25.30	25.45	ND	24.4	23	16	7	1.20

NP = Non-Plastic
ND = Not Determined

Test Preparation

Notes:

Disclaimer:

The laboratory testing services reported herein have been performed in accordance with the terms of a contract with WSP's client, and with the recognized standards indicated in this report, or local industry practice. This laboratory testing services report is for the sole use of WSP's client, relates only to the sample(s) tested and does not represent any (actual or implied) interpretation or opinion regarding specification compliance or materials suitability for any specific purpose.

Tested by: KMasongsong **Date:** 17 May 2024

Checked by: KMasongsong **Date:** 28 May 2024

Reviewed by: DMackie **Date:** 31 May 2024

WSP Canada Inc.
475B Tennyson Place
Victoria, British Columbia, V8Z 6S8
Canada
[+1] (250) 383 9702

LIQUID LIMIT, PLASTIC LIMIT AND PLASTICITY INDEX

ASTM D4318

Method A - Multipoint Test

Test Request #	V24-039	Project Number:	CA0024295.3529
Client:	West Shore Environment Services	Project Location:	Langford BC
Project Name:	Sooke Rd	Sample Location:	SBH24-04
Source:		Sample No.:	SA10
Soil Description:		Type:	GS
		Depth (m):	10.06 - 10.21

Specimen Reference	NA	Specimen Depth	NA	Date of Test	21 May 2024
Specimen Description	NA				

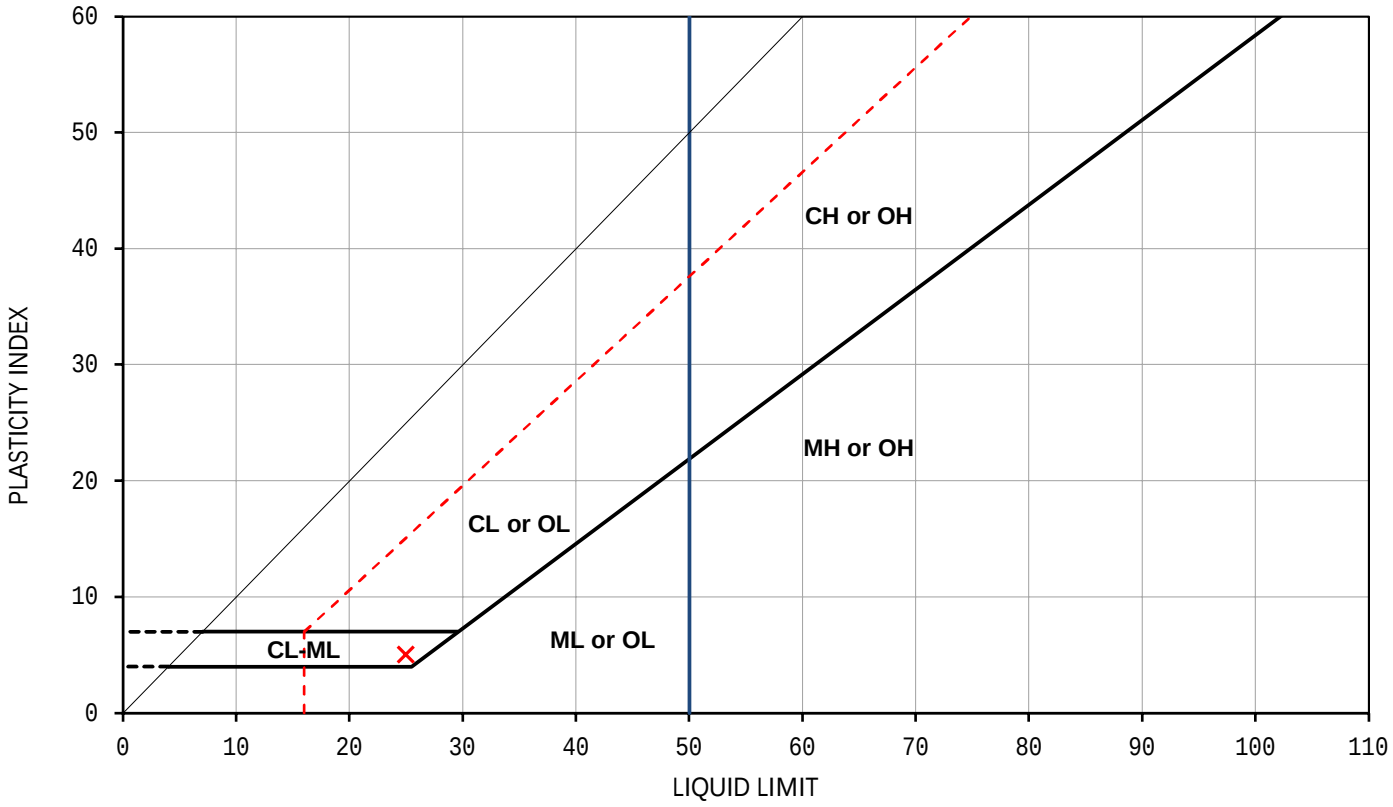

Sample Location	Sample / Specimen Number	Top Depth (m)	Base Depth (m)	Percent Passing #40 Sieve	Natural Water Content (%)	Liquid Limit	Plastic Limit	Plasticity Index	Liquidity Index
SBH24-04	SA10	10.06	10.21	ND	27.4	25	20	5	1.48

NP = Non-Plastic
ND = Not Determined

Test Preparation

Notes:

Disclaimer:

The laboratory testing services reported herein have been performed in accordance with the terms of a contract with WSP's client, and with the recognized standards indicated in this report, or local industry practice. This laboratory testing services report is for the sole use of WSP's client, relates only to the sample(s) tested and does not represent any (actual or implied) interpretation or opinion regarding specification compliance or materials suitability for any specific purpose.

Tested by: KMasongsong **Date:** 21 May 2024

Checked by: KMasongsong **Date:** 28 May 2024

Reviewed by: DMackie **Date:** 31 May 2024

WSP Canada Inc.
475B Tennyson Place
Victoria, British Columbia, V8Z 6S8
Canada
[+1] (250) 383 9702

LIQUID LIMIT, PLASTIC LIMIT AND PLASTICITY INDEX

ASTM D4318

Method A - Multipoint Test

Test Request #	V24-039	Project Number:	CA0024295.3529
Client:	West Shore Environment Services	Project Location:	Langford BC
Project Name:	Sooke Rd	Sample Location:	SBH24-04
Source:		Sample No.:	SA11
Soil Description:		Type:	GS
		Depth (m):	11.43 - 11.58

Specimen Reference	NA	Specimen Depth	NA	Date of Test	21 May 2024
Specimen Description	NA				

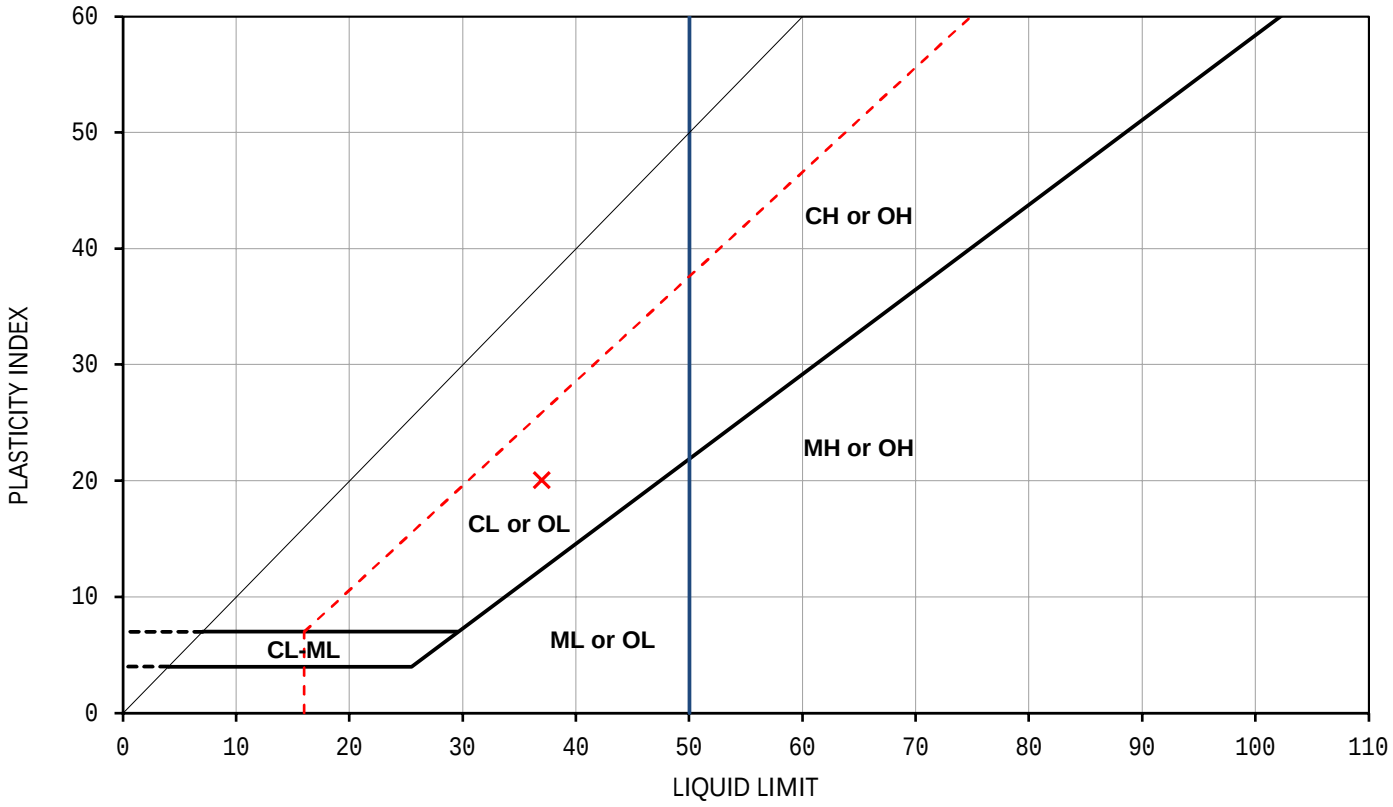

Sample Location	Sample / Specimen Number	Top Depth (m)	Base Depth (m)	Percent Passing #40 Sieve	Natural Water Content (%)	Liquid Limit	Plastic Limit	Plasticity Index	Liquidity Index
SBH24-04	SA11	11.43	11.58	ND	41.8	37	17	20	1.24

NP = Non-Plastic
ND = Not Determined

Test Preparation

Notes:

Disclaimer:

The laboratory testing services reported herein have been performed in accordance with the terms of a contract with WSP's client, and with the recognized standards indicated in this report, or local industry practice. This laboratory testing services report is for the sole use of WSP's client, relates only to the sample(s) tested and does not represent any (actual or implied) interpretation or opinion regarding specification compliance or materials suitability for any specific purpose.

Tested by: KMasongsong **Date:** 21 May 2024

Checked by: KMasongsong **Date:** 28 May 2024

Reviewed by: DMackie **Date:** 31 May 2024

WSP Canada Inc.
475B Tennyson Place
Victoria, British Columbia, V8Z 6S8
Canada
[+1] (250) 383 9702

LIQUID LIMIT, PLASTIC LIMIT AND PLASTICITY INDEX

ASTM D4318

Method A - Multipoint Test

Test Request #	V24-039	Project Number:	CA0024295.3529
Client:	West Shore Environment Services	Project Location:	Langford BC
Project Name:	Sooke Rd	Sample Location:	SBH24-04
Source:		Sample No.:	SA15
Soil Description:		Type:	GS
		Depth (m):	16.15 - 16.31

Specimen Reference	NA	Specimen Depth	NA	Date of Test	17 May 2024
Specimen Description	NA				

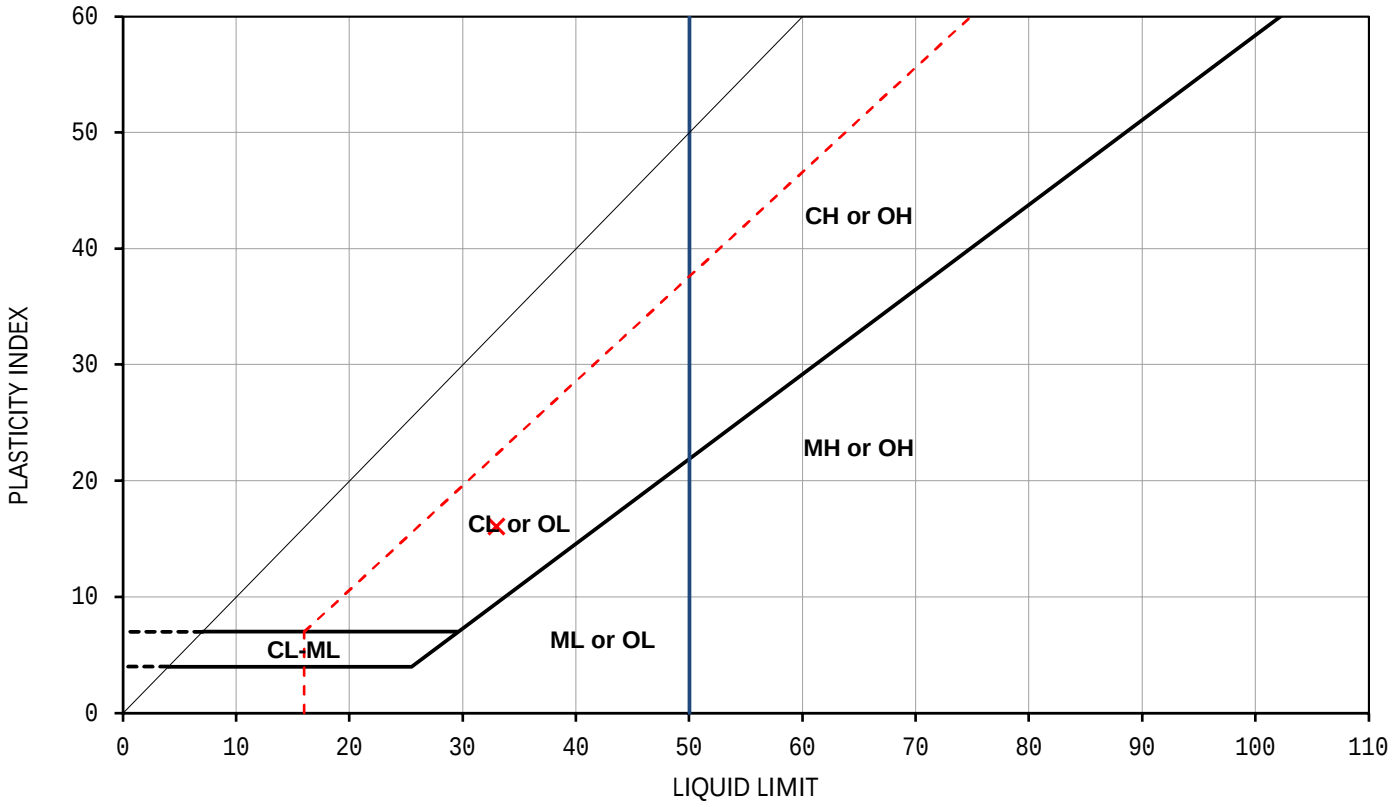

Sample Location	Sample / Specimen Number	Top Depth (m)	Base Depth (m)	Percent Passing #40 Sieve	Natural Water Content (%)	Liquid Limit	Plastic Limit	Plasticity Index	Liquidity Index
SBH24-04	SA15	16.15	16.31	ND	35.5	33	17	16	1.16

NP = Non-Plastic
ND = Not Determined

Test Preparation

Notes:

Disclaimer:

The laboratory testing services reported herein have been performed in accordance with the terms of a contract with WSP's client, and with the recognized standards indicated in this report, or local industry practice. This laboratory testing services report is for the sole use of WSP's client, relates only to the sample(s) tested and does not represent any (actual or implied) interpretation or opinion regarding specification compliance or materials suitability for any specific purpose.

Tested by: KMasongsong **Date:** 17 May 2024

Checked by: KMasongsong **Date:** 28 May 2024

Reviewed by: DMackie **Date:** 31 May 2024

WSP Canada Inc.
475B Tennyson Place
Victoria, British Columbia, V8Z 6S8
Canada
[+1] (250) 383 9702

LIQUID LIMIT, PLASTIC LIMIT AND PLASTICITY INDEX

ASTM D4318

Method A - Multipoint Test

Test Request #	V24-039	Project Number:	CA0024295.3529
Client:	West Shore Environment Services	Project Location:	Langford BC
Project Name:	Sooke Rd	Sample Location:	SBH24-04
Source:		Sample No.:	SA19
Soil Description:		Type:	GS
		Depth (m):	21.03 - 21.18

Specimen Reference	NA	Specimen Depth	NA	Date of Test	22 May 2024
Specimen Description	NA				

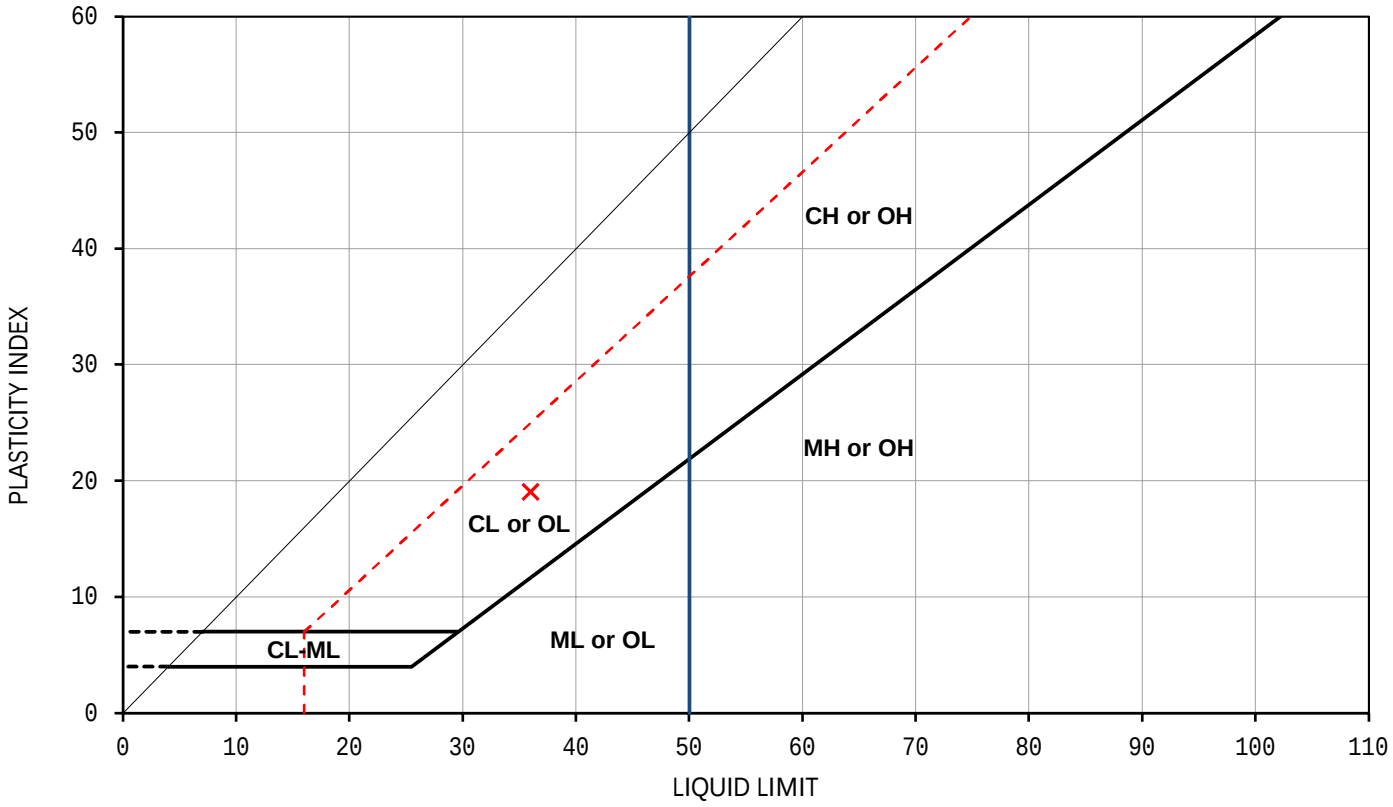

Sample Location	Sample / Specimen Number	Top Depth (m)	Base Depth (m)	Percent Passing #40 Sieve	Natural Water Content (%)	Liquid Limit	Plastic Limit	Plasticity Index	Liquidity Index
SBH24-04	SA19	21.03	21.18	ND	36.2	36	17	19	1.01

NP = Non-Plastic
ND = Not Determined

Test Preparation

Notes:

Disclaimer:

The laboratory testing services reported herein have been performed in accordance with the terms of a contract with WSP's client, and with the recognized standards indicated in this report, or local industry practice. This laboratory testing services report is for the sole use of WSP's client, relates only to the sample(s) tested and does not represent any (actual or implied) interpretation or opinion regarding specification compliance or materials suitability for any specific purpose.

Tested by: KMasongsong **Date:** 22 May 2024

Checked by: KMasongsong **Date:** 28 May 2024

Reviewed by: DMackie **Date:** 31 May 2024

WSP Canada Inc.
475B Tennyson Place
Victoria, British Columbia, V8Z 6S8
Canada
[+1] (250) 383 9702

LIQUID LIMIT, PLASTIC LIMIT AND PLASTICITY INDEX

ASTM D4318

Method A - Multipoint Test

Test Request #	V24-039	Project Number:	CA0024295.3529
Client:	West Shore Environment Services	Project Location:	Langford BC
Project Name:	Sooke Rd	Sample Location:	SBH24-05
Source:		Sample No.:	SA04
Soil Description:		Type:	GS
		Depth (m):	7.01 - 7.16

Specimen Reference	NA	Specimen Depth	NA	Date of Test	22 May 2024
Specimen Description	NA				

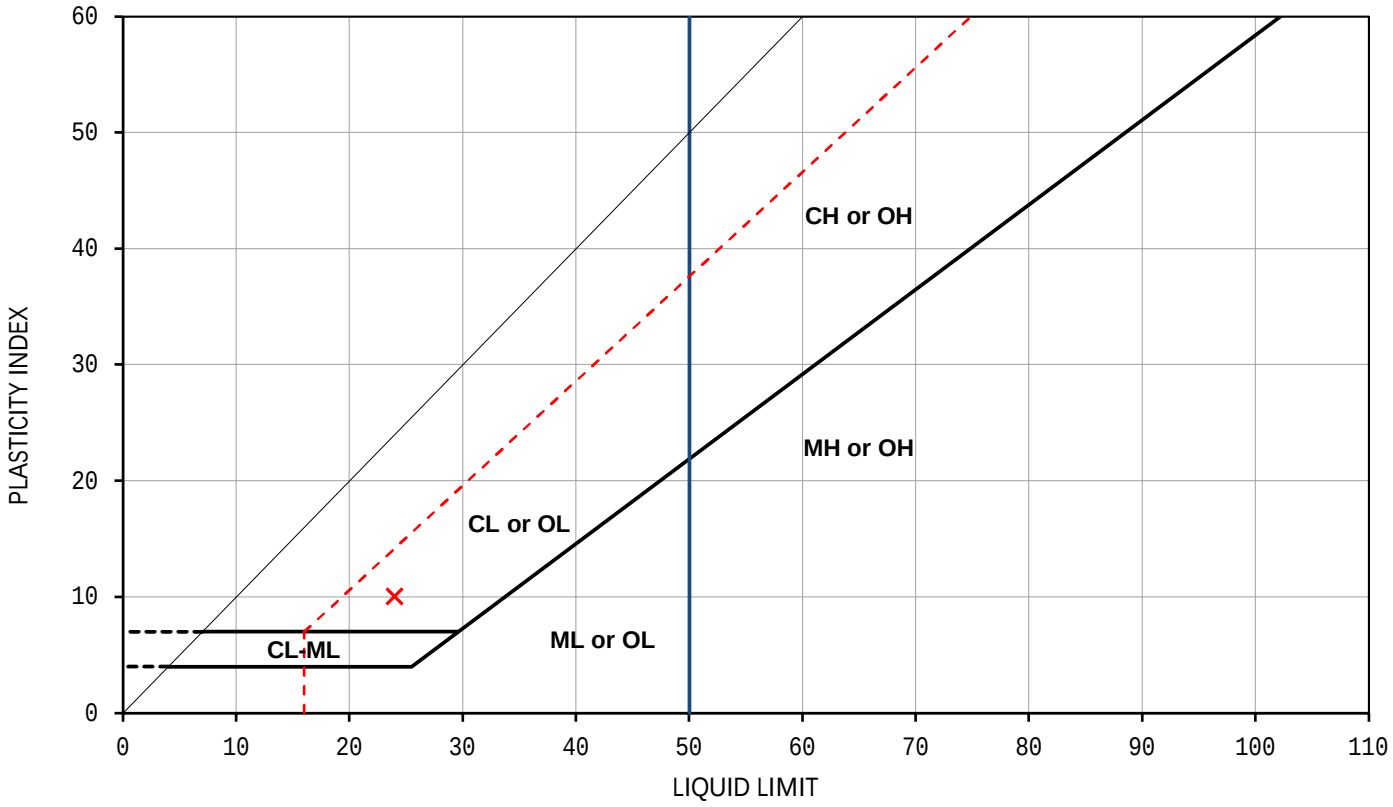

Legend

A-Line

U-Line

Sample Location	Sample / Specimen Number	Top Depth (m)	Base Depth (m)	Percent Passing #40 Sieve	Natural Water Content (%)	Liquid Limit	Plastic Limit	Plasticity Index	Liquidity Index
SBH24-05	SA04	7.01	7.16	ND	31.3	24	14	10	1.73

NP = Non-Plastic

ND = Not Determined

Test Preparation

Notes:

Disclaimer:

The laboratory testing services reported herein have been performed in accordance with the terms of a contract with WSP's client, and with the recognized standards indicated in this report, or local industry practice. This laboratory testing services report is for the sole use of WSP's client, relates only to the sample(s) tested and does not represent any (actual or implied) interpretation or opinion regarding specification compliance or materials suitability for any specific purpose.

Tested by: KMasongsong **Date:** 22 May 2024

Checked by: KMasongsong **Date:** 28 May 2024

Reviewed by: DMackie **Date:** 31 May 2024

WSP Canada Inc.
475B Tennyson Place
Victoria, British Columbia, V8Z 6S8
Canada
[+1] (250) 383 9702

LIQUID LIMIT, PLASTIC LIMIT AND PLASTICITY INDEX

ASTM D4318

Method A - Multipoint Test

Test Request #	V24-039	Project Number:	CA0024295.3529
Client:	West Shore Environment Services	Project Location:	Langford BC
Project Name:	Sooke Rd	Sample Location:	SBH24-06
Source:		Sample No.:	SA04
Soil Description:		Type:	GS
		Depth (m):	8.69 - 8.84

Specimen Reference	NA	Specimen Depth	NA	Date of Test	23 May 2024
Specimen Description	NA				

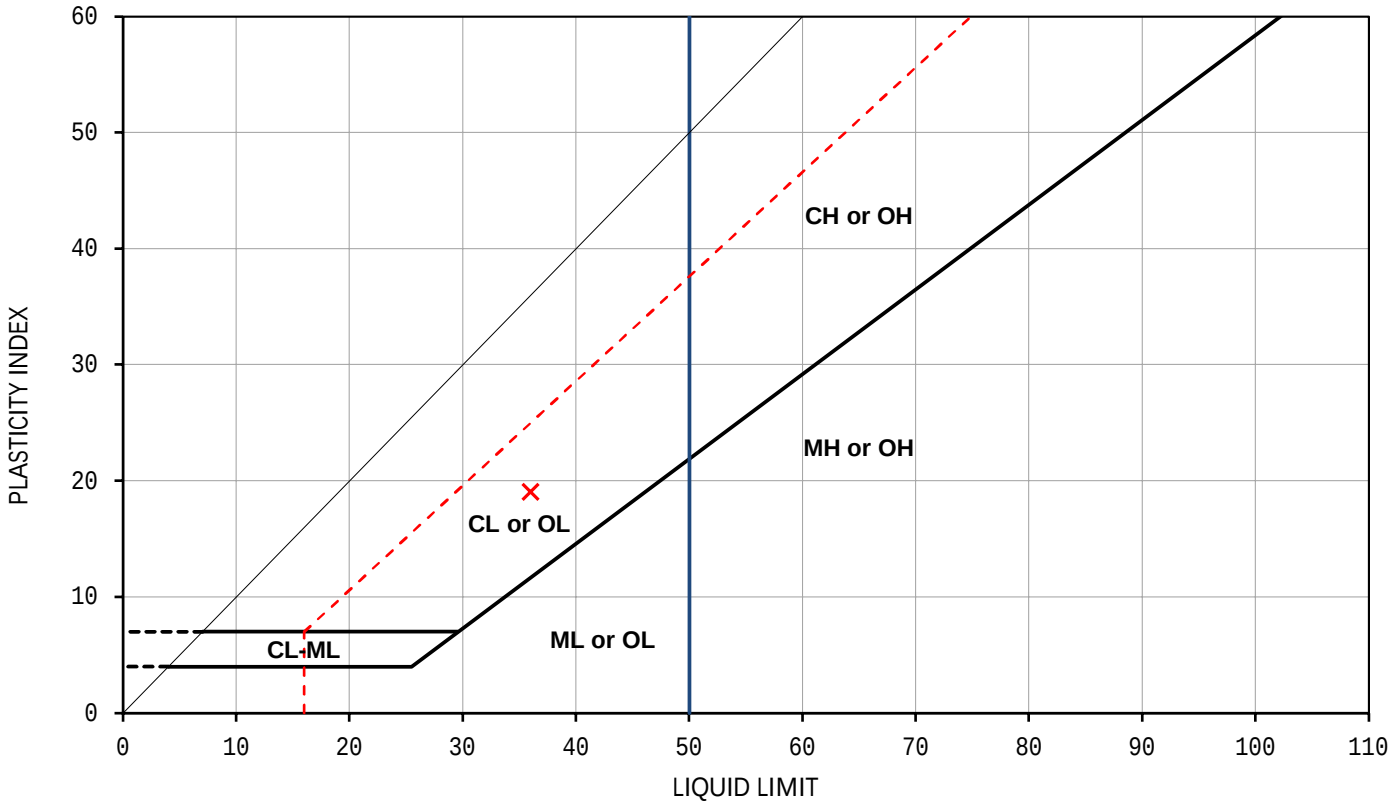

Sample Location	Sample / Specimen Number	Top Depth (m)	Base Depth (m)	Percent Passing #40 Sieve	Natural Water Content (%)	Liquid Limit	Plastic Limit	Plasticity Index	Liquidity Index
SBH24-06	SA04	8.69	8.84	ND	47.8	36	17	19	1.62

NP = Non-Plastic
ND = Not Determined

Test Preparation

Notes:

Disclaimer:

The laboratory testing services reported herein have been performed in accordance with the terms of a contract with WSP's client, and with the recognized standards indicated in this report, or local industry practice. This laboratory testing services report is for the sole use of WSP's client, relates only to the sample(s) tested and does not represent any (actual or implied) interpretation or opinion regarding specification compliance or materials suitability for any specific purpose.

Tested by: KMasongsong **Date:** 23 May 2024

Checked by: KMasongsong **Date:** 28 May 2024

Reviewed by: DMackie **Date:** 31 May 2024

WSP Canada Inc.
475B Tennyson Place
Victoria, British Columbia, V8Z 6S8
Canada
[+1] (250) 383 9702

LIQUID LIMIT, PLASTIC LIMIT AND PLASTICITY INDEX

ASTM D4318

Method A - Multipoint Test

Test Request #	V24-039	Project Number:	CA0024295.3529
Client:	West Shore Environment Services	Project Location:	
Project Name:	Sooke Rd	Sample Location:	SBH24-07
Source:		Sample No.:	SA03
Soil Description:		Type:	GS
		Depth (m):	8.69 - 8.84

Specimen Reference	NA	Specimen Depth	NA	Date of Test	24 May 2024
Specimen Description	NA				

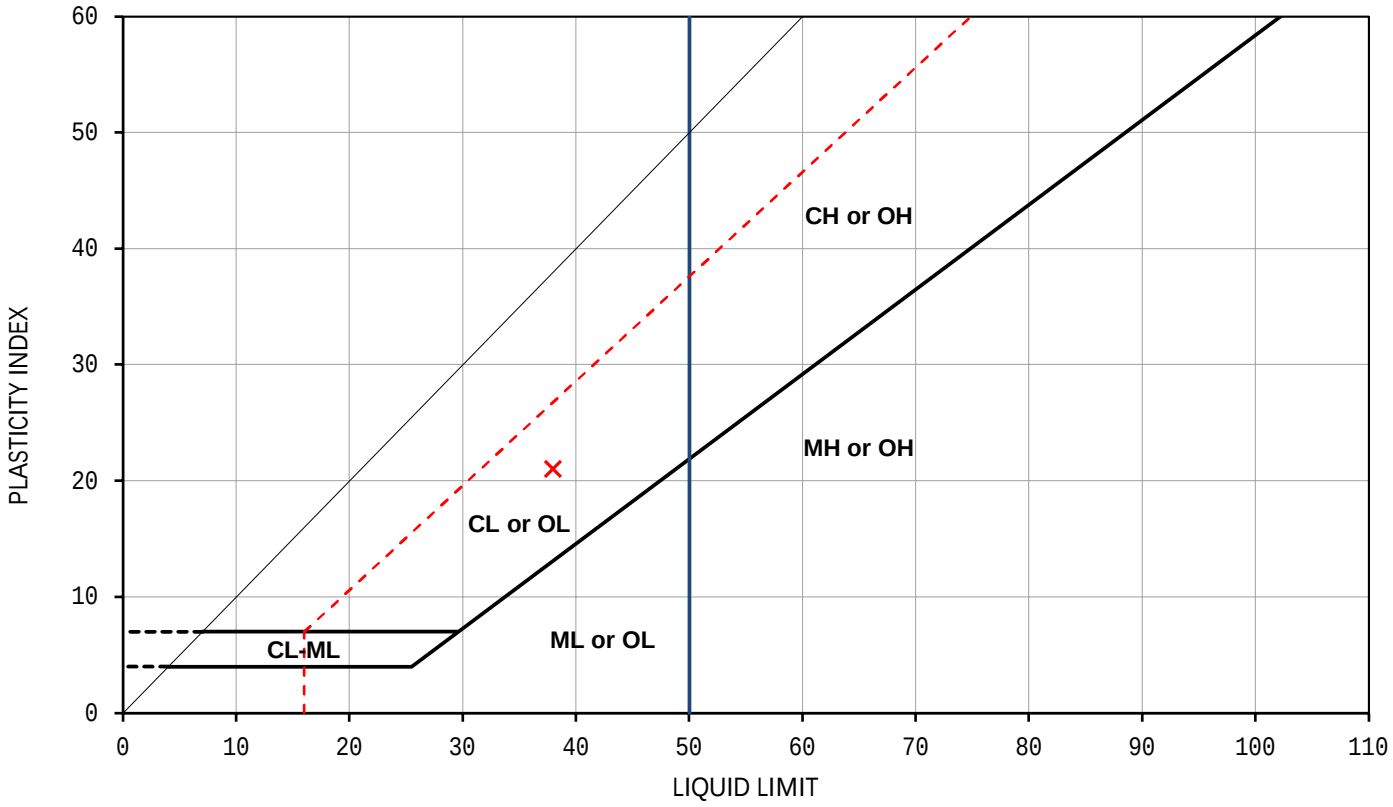

Legend

A-Line

U-Line

Sample Location	Sample / Specimen Number	Top Depth (m)	Base Depth (m)	Percent Passing #40 Sieve	Natural Water Content (%)	Liquid Limit	Plastic Limit	Plasticity Index	Liquidity Index
SBH24-07	SA03	8.69	8.84	ND	40.7	38	17	21	1.13

NP = Non-Plastic

ND = Not Determined

Test Preparation

Notes:

Disclaimer:

The laboratory testing services reported herein have been performed in accordance with the terms of a contract with WSP's client, and with the recognized standards indicated in this report, or local industry practice. This laboratory testing services report is for the sole use of WSP's client, relates only to the sample(s) tested and does not represent any (actual or implied) interpretation or opinion regarding specification compliance or materials suitability for any specific purpose.

Tested by: KMasongsong **Date:** 24 May 2024

Checked by: KMasongsong **Date:** 28 May 2024

Reviewed by: DMackie **Date:** 31 May 2024

WSP Canada Inc.
475B Tennyson Place
Victoria, British Columbia, V8Z 6S8
Canada
[+1] (250) 383 9702

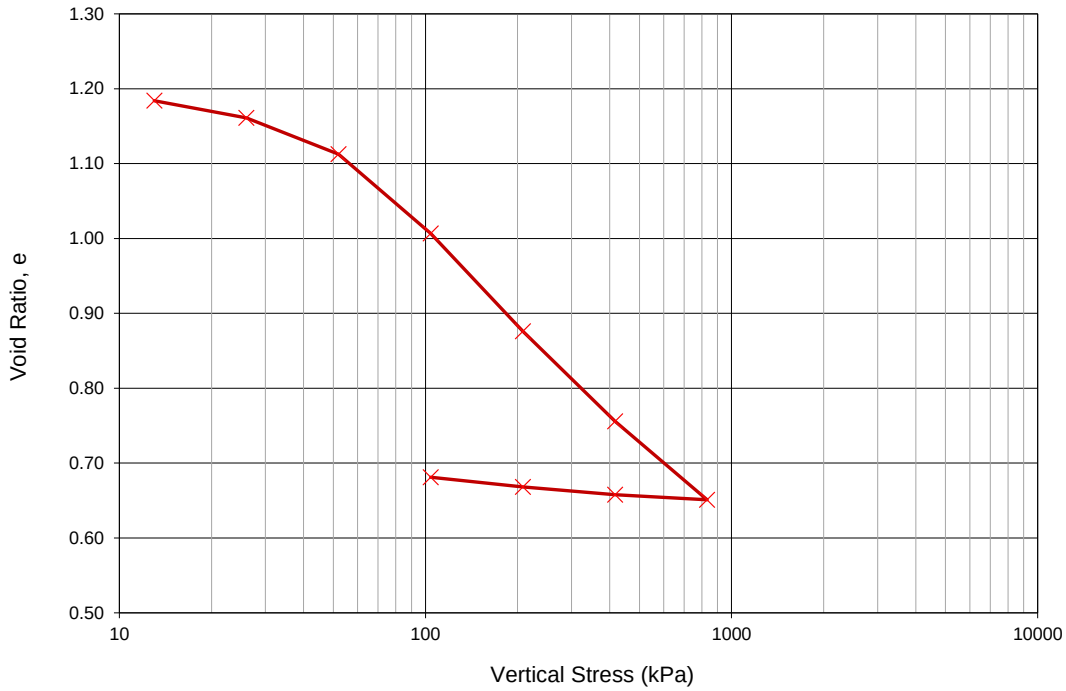

Test Method:	ASTM 2435	**Soil Description:**	CLAY, grey, wet.
Trimming Procedure:	Cutting Shoe	**Plastic Limit (PL):**	19 %
Test Condition:	Inundated at 13 kPa	**Liquid Limit (LL):**	32 %
Specific Gravity:	2.8 assumed	**Plasticity Index (PI):**	13 %

	Initial	**Final**		
Sample Height:	20.080 mm	15.321 mm	**Preconsol Pressure[1]:**	50 kPa
Water Content (w):	38.6 %	30.6 %	**Height of Solids (H_s):**	9.11 mm
Void Ratio (e):	1.203	0.809	**Saturated Unit Weight**	17.28 kN/m^3
Saturation (S):	90 %	100 %	**Dry Unit Weight:**	12.47 kN/m^3

Increment No.	Stage	Vertical Stress (kPa)	Loading Duration (hours)	Sample Height (mm)	Vertical Strain	Void Ratio (e)	Logarithm of Time Method[2]		Square Root of Time Method[3]		Compression Index (Cc or Cr)	Secondary Compression Index (Ca)
							t_{50} (min)	c_v (mm^2/s)	t_{90} (min)	c_v (mm^2/s)		
1		13	17.2	19.904	0.9%	1.184	1.2	0.279	7.2	0.195	-	0.001
2		26	24.0	19.697	1.9%	1.161	1.5	0.220	4.1	0.340	0.076	0.003
3		52	24.0	19.253	4.1%	1.113	1.5	0.212	7.0	0.193	0.162	0.010
4	Load	104	24.0	18.290	8.9%	1.007	4.0	0.073	16.8	0.075	0.351	0.021
5		208	24.0	17.098	14.9%	0.876	3.6	0.074	13.0	0.088	0.434	0.021
6		416	24.0	16.003	20.3%	0.756	1.9	0.118	9.2	0.108	0.399	0.018
7		832	24.0	15.047	25.1%	0.651	1.4	0.147	4.8	0.179	0.348	0.014
8		416	24.0	15.109	24.8%	0.658	0.0	0.000	0.0	0.000	0.023	0.000
9	Rebound	208	24.0	15.204	24.3%	0.668	0.0	0.000	0.0	0.000	0.035	0.000
10		104	24.0	15.321	23.7%	0.681	0.0	0.000	0.0	0.000	0.043	0.000

Notes:
1. Estimated using the Pacheco Silva Method (1970)
2. Logarithm of Time method proposed by Casagrande and Fadum (1940)
3. Square Root of Time Method proposed by Taylor (1948)

THURBER ENGINEERING LTD.

One Dimensional Consolidation Test Results

Test Hole	SBH24-04
Project: CA0024295.3529 BC WSP	Sample No. SA7
Job No. 21774-170	Date May 14, 2024
	Depth 25-27 ft

Deformation vs Log of Time

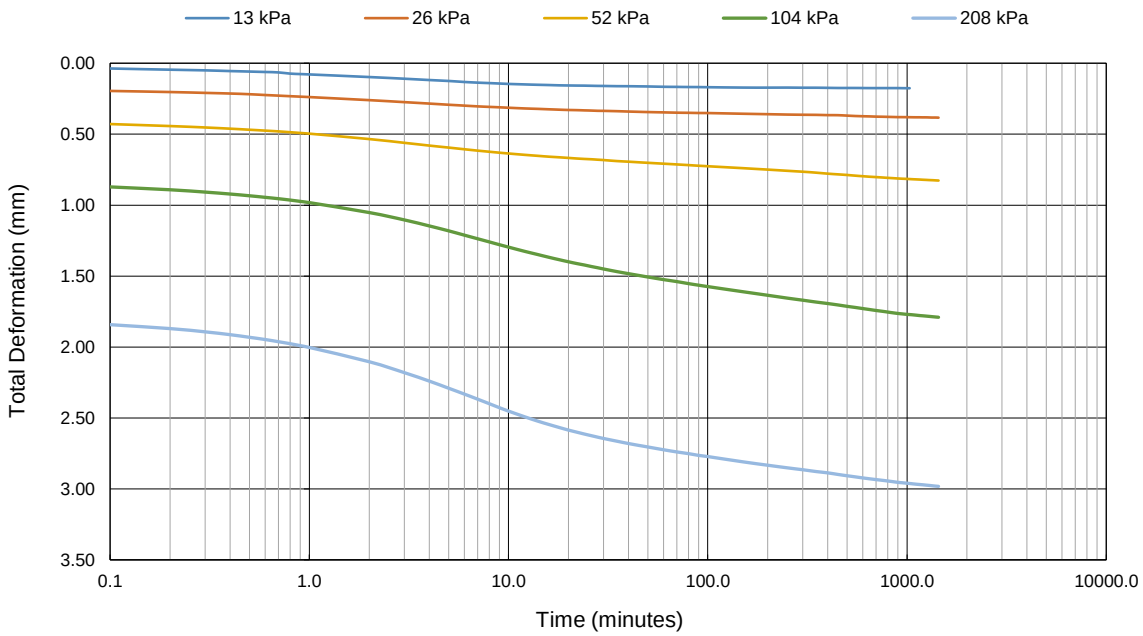

Deformation vs Log of Time

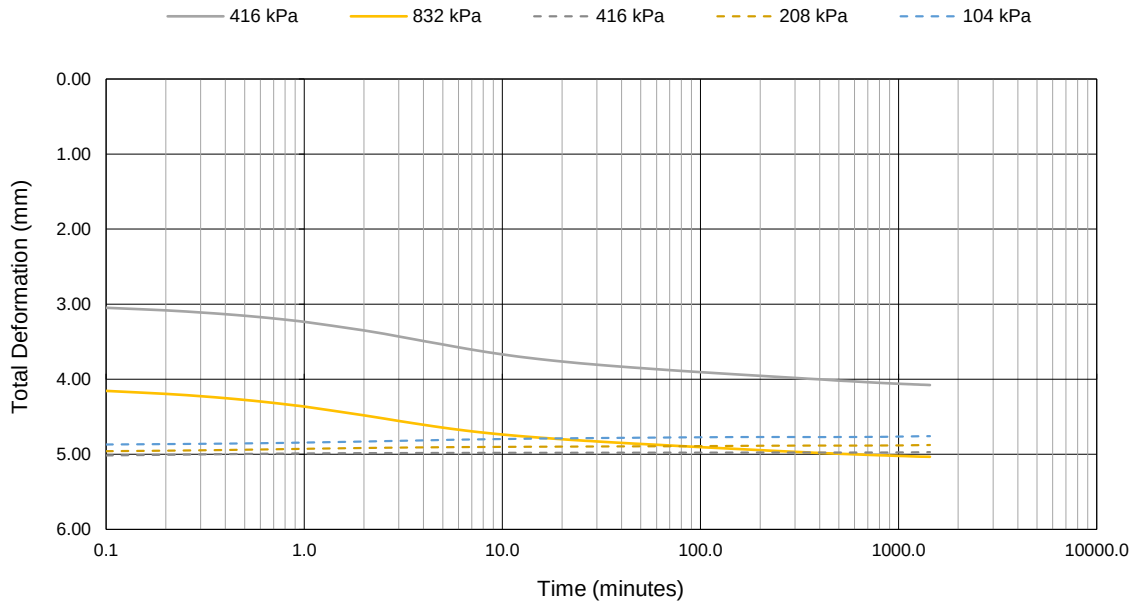

THURBER ENGINEERING LTD.	**One Dimensional Consolidation Test Results**	Test Hole: SBH24-04
	Project: CA0024295.3529 BC WSP	Sample No.: SA7
	Job No.: 21774-170 / Date: May 14, 2024	Depth: 25-27 ft

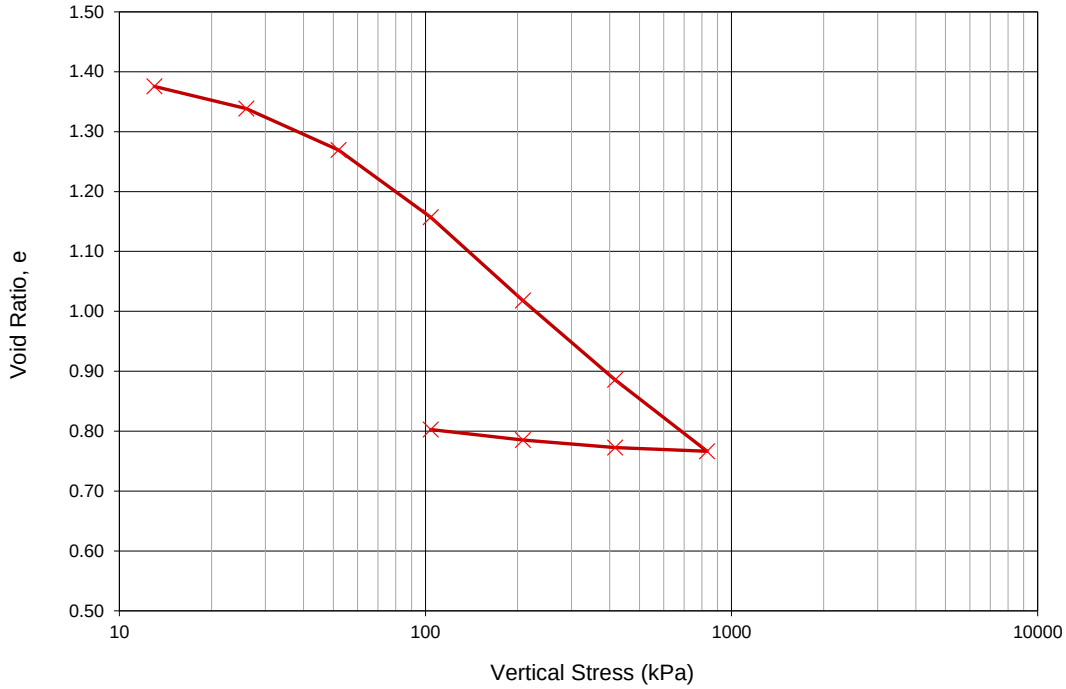

Test Method:	ASTM 2435	**Soil Description:**	CLAY, grey, wet.
Trimming Procedure:	Cutting Shoe	**Plastic Limit (PL):**	19 %
Test Condition:	Inundated at 13 kPa	**Liquid Limit (LL):**	30 %
Specific Gravity:	2.8 assumed	**Plasticity Index (PI):**	11 %

	Initial	**Final**		
Sample Height:	19.990 mm	14.940 mm	**Preconsol Pressure[1]:**	50 kPa
Water Content (w):	48.3 %	33.3 %	**Height of Solids (H_s):**	8.29 mm
Void Ratio (e):	1.412	0.888	**Saturated Unit Weight**	16.89 kN/m^3
Saturation (S):	96 %	100 %	**Dry Unit Weight:**	11.39 kN/m^3

Increment No.	Stage	Vertical Stress (kPa)	Loading Duration (hours)	Sample Height (mm)	Vertical Strain	Void Ratio (e)	Logarithm of Time Method[2]		Square Root of Time Method[3]		Compression Index (Cc or Cr)	Secondary Compression Index (Ca)
							t_{50} (min)	c_v (mm^2/s)	t_{90} (min)	c_v (mm^2/s)		
1		13	22.7	19.687	1.5%	1.376	3.8	0.086	14.8	0.094	-	0.005
2		26	24.0	19.378	3.1%	1.338	5.0	0.063	20.3	0.067	0.124	0.010
3		52	24.0	18.807	5.9%	1.269	4.8	0.063	18.7	0.070	0.229	0.015
4	Load	104	24.0	17.879	10.6%	1.157	5.6	0.050	19.8	0.061	0.372	0.021
5		208	24.0	16.726	16.3%	1.018	4.2	0.059	17.6	0.061	0.462	0.023
6		416	24.0	15.626	21.8%	0.886	2.6	0.083	10.9	0.087	0.441	0.020
7		832	24.0	14.639	26.8%	0.766	1.6	0.118	6.8	0.122	0.396	0.016
8		416	24.0	14.689	26.5%	0.773	0.0	0.000	0.0	0.000	0.020	0.000
9	Rebound	208	24.0	14.795	26.0%	0.785	0.0	0.000	0.0	0.000	0.042	0.000
10		104	24.0	14.940	25.3%	0.803	0.0	0.000	0.0	0.000	0.058	0.000

Notes:
1. Estimated using the Pacheco Silva Method (1970)
2. Logarithm of Time method proposed by Casagrande and Fadum (1940)
3. Square Root of Time Method proposed by Taylor (1948)

THURBER ENGINEERING LTD.

One Dimensional Consolidation Test Results

Test Hole	SBH24-03
Project: CA0024295.3529 BC WSP	Sample No. SA6
Job No. 21774-170	Date May 21, 2024
	Depth 20-22.25 ft

Deformation vs Log of Time

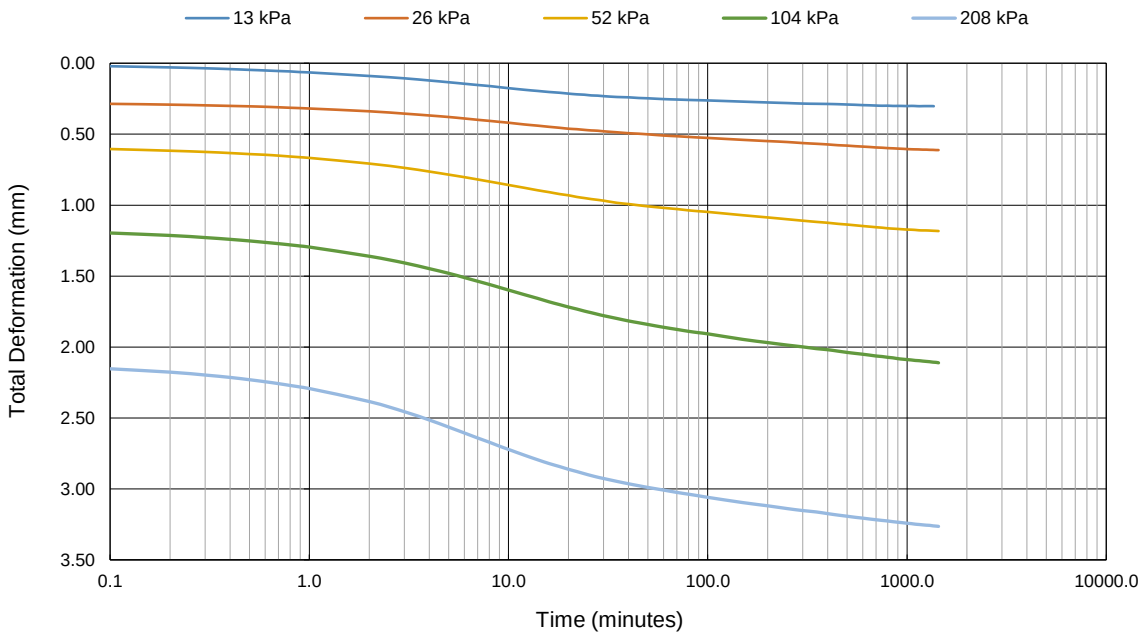

Deformation vs Log of Time

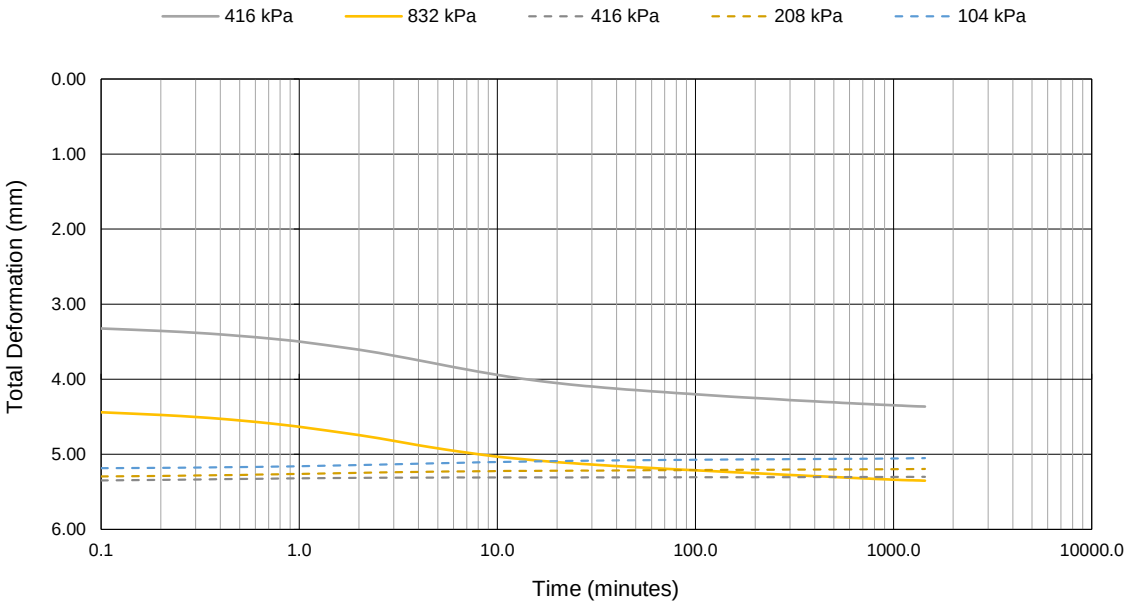

THURBER ENGINEERING LTD.

One Dimensional Consolidation Test Results		Test Hole: SBH24-03
Project: CA0024295.3529 BC WSP		Sample No.: SA6
Job No.: 21774-170	Date: May 21, 2024	Depth: 20-22.25 ft

THURBER ENGINEERING LTD.

Liquid Limit, Plastic Limit & Plasticity Index of Soils
ASTM D4318

Client:	WSP		
Project:	CA 0024295.3529		
Project No:	21774-170	**Date Tested:**	21-May-24
Test Hole:	SBH24-03 Depth: 20'-22'-3"	**Tested By:**	ACK
Sample No:	6	**Checked By:**	JSH

LIQUID LIMIT

Trial No:	1	2	3	
No of Blows:	44	33	24	14
Container No.	233	242	221	619
Wet Soil + Container	24.95	27.98	28.37	26.93
Dry Soil + Container	22.47	24.77	25.09	23.72
Wt. Of Container	13.73	13.71	14.13	13.65
Moisture Content	28.4	29.0	29.9	31.9

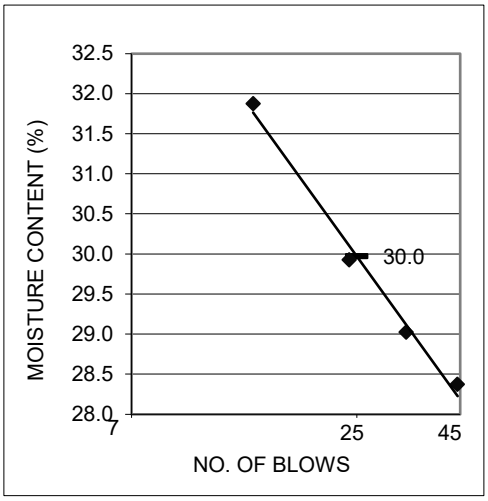

PLASTIC LIMIT

	1	2		**AVERAGE**
Container No.	253	220		
Wet Soil + Container	21.4	20.26		
Dry Soil + Container	20.23	19.15		
Wt. Of Container	13.63	13.65		
Moisture Content	17.7	20.2		**19.0**

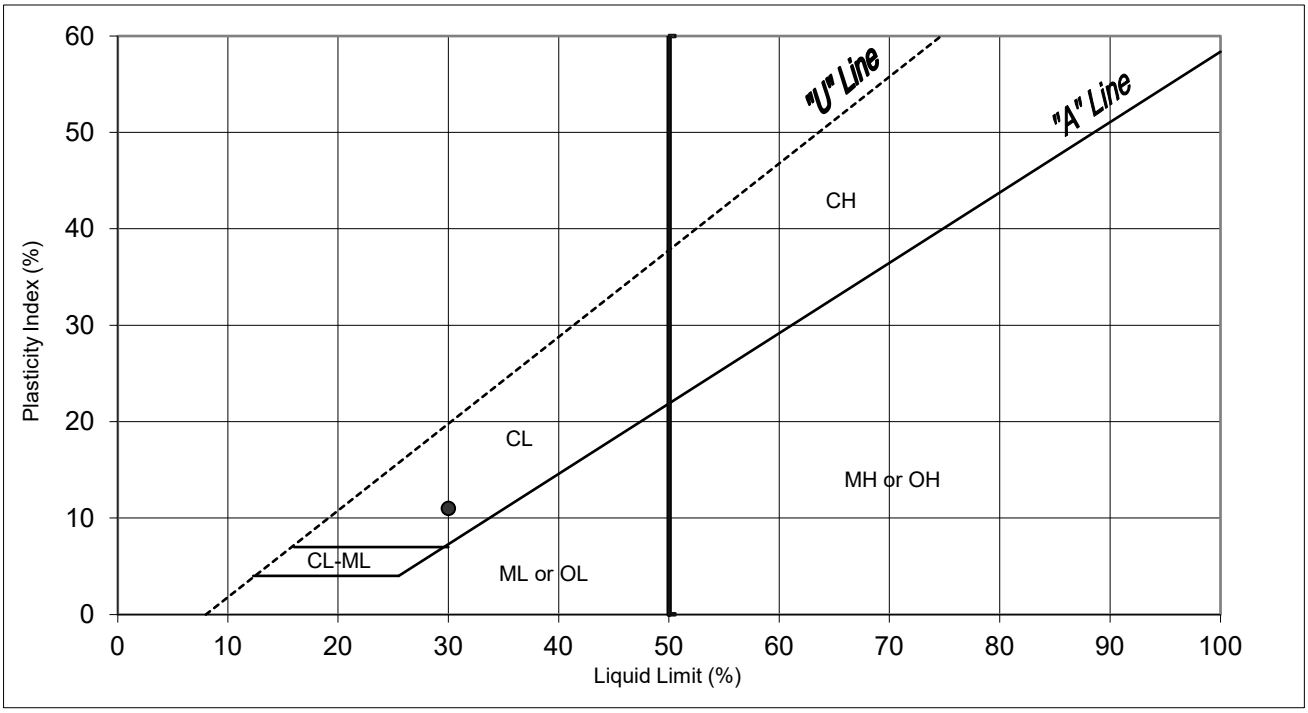

REMARKS As received MC % = 48.8

Liquid Limit:	**30**
Plastic Limit:	**19**
Plasticity Index:	**11**
Liquidity Index:	**3**
USC Classification:	**CL**

THURBER ENGINEERING LTD.

Liquid Limit, Plastic Limit & Plasticity Index of Soils
ASTM D4318

Client:	WSP		
Project:	CA 0024295.3529		
Project No:	21774-170	**Date Tested:**	21-May-24
Test Hole:	SBH24-04 Depth: 25'-27'	**Tested By:**	ACK
Sample No:	7	**Checked By:**	JSH

LIQUID LIMIT

Trial No:	1	2	3	
No of Blows:	40	32	14	10
Container No.	251	243	249	223
Wet Soil + Container	26.89	28.82	26.88	27.15
Dry Soil + Container	23.62	25.19	23.59	23.64
Wt. Of Container	13.29	13.82	13.67	13.24
Moisture Content	31.7	31.9	33.2	33.8

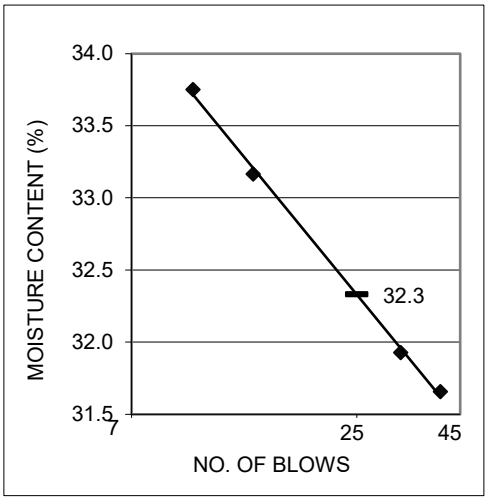

PLASTIC LIMIT

	1	2		**AVERAGE**
Container No.	245	256		
Wet Soil + Container	18.75	20.04		
Dry Soil + Container	17.89	18.99		
Wt. Of Container	13.56	13.42		
Moisture Content	19.9	18.9		**19.4**

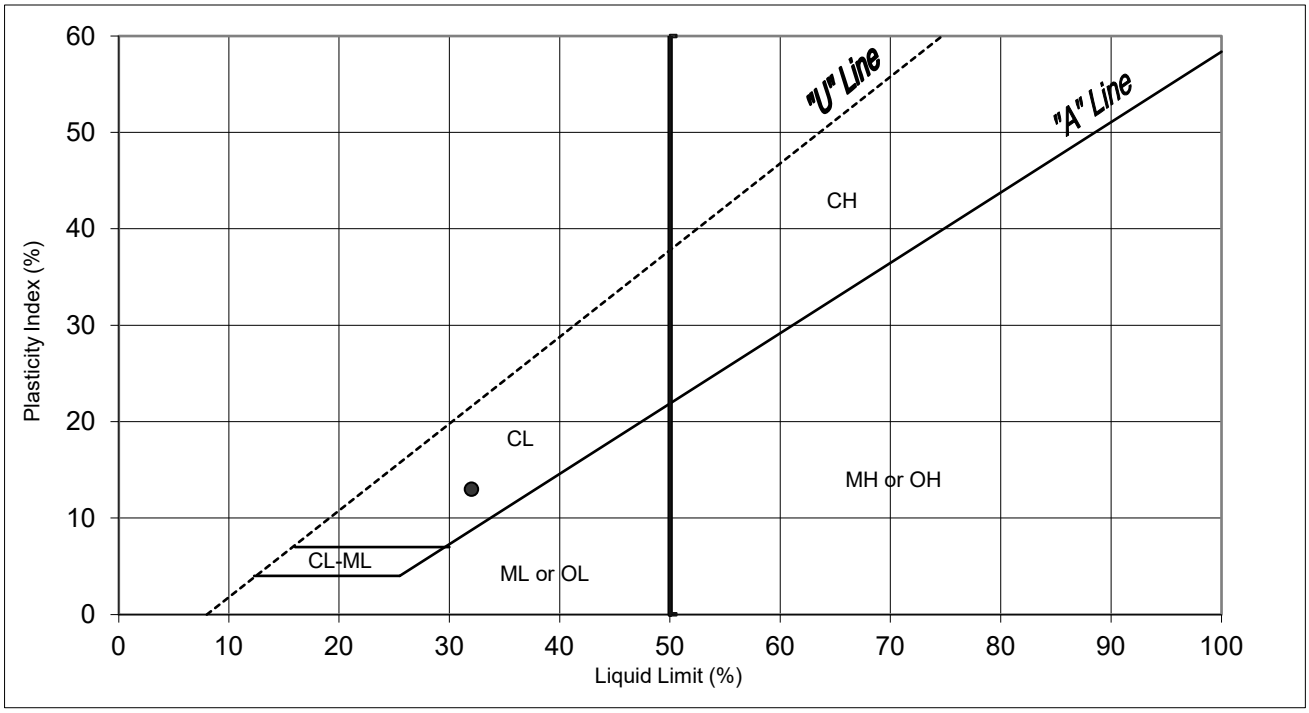

REMARKS As received MC % = 38.8

Liquid Limit:	**32**
Plastic Limit:	**19**
Plasticity Index:	**13**
Liquidity Index:	**2**
USC Classification:	**CL**

2302, 4464 Markham Street, Victoria, BC V8Z 7X8 T: 250 727 2201 F: 250 727 3710
thurber.ca

TECHNICAL MEMORANDUM

DATE June 26, 2025 **Reference No.** CA0051793.7685-001-TM-Rev0

TO Jeff Howard, jeff.howard@colquitz.ca

CC Catherine Laurie (Catherine.Laurie@nexuswg.com), Andrew Marsh (amarsh@gcengineering.org)

FROM Chiya Gharakhan **EMAIL chiya.gharakhan@wsp.com**

P–Y Curves and Displacement Profile for Delem Drive Pump Station Pile Design

1 INTRODUCTION

This memorandum presents the results of a geotechnical evaluation conducted to support the preliminary design of the pile-supported foundation for the proposed pump station. The objectives of the assessment are to estimate ground displacements and to develop lateral pile response parameters (p–y) curves for use in structural design.

For this analysis, a 610 mm diameter steel pipe pile was assumed as a representative pile size. Ground displacements were estimated using limit equilibrium modeling in SLOPE/W. Seismic-induced displacements were estimated using the Bray and Travasarou (2007) method for crustal earthquakes. To account for potential subduction events, we also checked displacements using the Macedo, Bray, and Travasarou (2019) method, which is calibrated for subduction ground motions.

Lateral pile behavior, including deflection profiles and p–y curves, was evaluated using LPILE. The material parameters used in both the SLOPE/W and LPILE models were derived from site-specific geotechnical investigation data and supplemented using empirical correlations and guidance from the Handbook of Geotechnical Investigation and Design Tables and the AASHTO.

2 GROUND MODEL

The ground model was developed based on available borehole logs, cone penetration test (CPT) results, and laboratory test data. Representative soil properties were assigned to each layer to reflect the anticipated field conditions above the bedrock. A summary of the selected soil parameters is provided in Table 1. Groundwater was taken as 3m below ground level (bgl).

Table 1: Material Properties in Analysis

Soil Layer	Depth to Top (mbgl)	Depth to Bottom (mbgl)	Soil Model SLOPE/W	Soil Model LPILE	Unit Weight (kN/m^3)	Cohesion (c' or Sr) kPa Slop/w and Lpile Seismic case(kPa)	Cohesion (Su) Lpile static case (kPa)	Friction Angle (φ) (degrees)	Unconfined Compressive Strength (MPa)
Rockfill	0	1.8	Mohr-Coulomb	API Sand	20	0		40	
Silty Sand	1.8	3.7	Mohr-Coulomb	API Sand	18	0		30	
Peat	3.7	6.1	Mohr-Coulomb	Soft Clay (Matlock)	14	20	50	0	
Soft Clay	6.1	20.4	Mohr-Coulomb	Soft Clay (Matlock)	16	17	40	0	
Sandy Silt	20.4	23.8	Mohr-Coulomb	API Sand	18	0		30	
Till	23.8	24.5	Mohr-Coulomb	API Sand	22	10		38	
Bedrock	24.5			Strong Rock					80

3 ANALYSIS

SLOPE/W

Slope stability analysis was conducted using SLOPE/W to evaluate the slope adjacent to the proposed pump station components. Initially a pseudo-static analysis was performed by applying 50% of the site-specific peak ground acceleration (PGA = 0.808g) to represent seismic loading conditions at the Delem Drive site. The critical slip surface was identified under seismic conditions, and the corresponding yield acceleration (k_y) was determined to achieve FS=1.0. This k_y value was then applied in conjunction with empirical methods to estimate potential seismic-induced displacements, using the Bray and Macedo (2017) approach for subduction events and the Bray and Travasarou (2007) method for crustal events.

LPILE

LPILE was used to perform lateral pile analysis to develop nonlinear p–y soil springs that represent the lateral response of the surrounding soil.

For this analysis, the pile was assumed to be a concrete pile with a diameter of 610mm. The ground model used is presented in Table 1 above. These properties were used to develop representative p–y curves for each soil layer. Soil springs were generated at 1m intervals below ground level, extending through the soil layers and continuing down to 5m into the bedrock to capture the resistance provided by the underlying competent materials.

4 RESULTS

SLOPE/W

The pseudo-static slope stability analysis yielded a factor of safety of 0.712, indicating that the slope may experience seismic-induced deformation during strong ground shaking. The crest of the slope, located near the proposed pump station components, is expected to undergo the displacement. To estimate the magnitude of this movement, the Bray & Travasarou (2007) and Bray & Macedo empirical methods was applied using the calculated yield acceleration (k_y) and site-specific seismic parameters. The input values used in these methods for the subduction and crustal earthquakes are summarized in Tables 2 & 3, respectively.

Table 2: Input Parameters and Result Bray & Macedo (2017) – Subduction Event

Parameter	Description	Value	Unit
Yield Coefficient (k_y)	Based on pseudo-static slope stability analysis	0.278	g
Initial Fundamental Period (Ts)	Calculated as Ts = 4H/Vs, where H is the depth of the sliding (failure) mass (H = 6 m, Vs = 117 m/s)	0.2	seconds
Degraded Period (1.5Ts)	Used in spectral acceleration lookup	0.30	seconds
Moment Magnitude (Mw)	Earthquake magnitude	9.0	–
Spectral Acceleration (Sa(1.5Ts))	Spectral acceleration at degraded period	2.07	g
Estimated Displacement	Based on Bray and Macedo (2017) method	49	cm

Table 3: Input Parameters and Result for Bray and Travasarou (2007) – Crustal Event

Parameter	Description	Value	Unit
Yield Coefficient (k_y)	Based on pseudo-static slope stability analysis	0.278	g
Initial Fundamental Period (Ts)	Calculated as Ts = 4H/Vs, where H is the depth of the sliding (failure) mass (H = 6 m, Vs = 117 m/s)	0.2	seconds
Degraded Period (1.5Ts)	Used in spectral acceleration lookup	0.30	seconds
Moment Magnitude (Mw)	Earthquake magnitude	7.0	–
Spectral Acceleration (Sa(1.5Ts))	Spectral acceleration at degraded period	2.07	g
Estimated Displacement	Based on Bray and Travasarou (2007) method	46	cm

LPILE

The p-y curves for a single pile in level rockfill were calculated at 1-metre intervals from 1 m below the top of rockfill to 27 m below the top of rockfill. Separate p-y curves were developed for both static and seismic cases. The static p-y curves are based on the full undrained shear strength of the clay (Su), while the seismic p-y curves are based on the residual or softened undrained strength of the clay (Sr). The plotted seismic p-y curves are provided in Appendix C, with the corresponding tabulated data presented in Appendix D. The plotted static p-y curves are provided in Appendix E, with the corresponding data included in Appendix F.

5 DISCUSSION ON GEOTECHNICAL ANALYSIS AND RESULTS

Please note the following comments with regards to the p-y curves and deflection profile presented in this memo:

1) The displacement analysis was conducted using the empirical method developed by Bray and Travasarou (2007), which estimates seismic-induced displacements based on the yield acceleration and site-specific ground motion parameters. This approach is widely accepted for practical seismic slope displacement assessments, particularly when advanced laboratory testing and detailed dynamic soil models are beyond the scope of work.

2) The analysis was conducted for a single pile, group effects were not considered.

3) The displacement value presented represents the estimated permanent horizontal displacement at the slope crest near the pump station components, based on the Bray and Travasarou and Macedo methods. Dynamic interaction or differential movement between adjacent structures during ground shaking was not evaluated, as this was beyond the scope of the current analysis.

We understand that the wet well and valve chamber are to be supported on piles and located approximately 5.5 meters below the ground surface. As such, passive soil pressure should be considered in the design, and an advanced pile-soil interaction analysis is required to assess the pile deflection profile. This analysis is not currently within our scope of work.

In contrast, the generator (genset) and kiosk are proposed to be supported on shallow foundations—this should be reviewed for applicability. The estimated horizontal displacement which is in the order of 500mm as presented in Tables 2 and 3 and in Appendix B should be considered as the potential differential movement between the piled and shallow foundation elements. If the design can accommodate this differential displacement, no additional analysis is necessary. However, if it cannot be tolerated, then either a more detailed analysis should be performed, or a consistent foundation system should be adopted across all elements (i.e., both elements pile supported).

With regards to the pile design, if the single pile analysis cannot be made to work, then additional and/or more rigorous geotechnical analysis could be considered. The structural analysis may benefit from considering the piles as a frame, with reduced displacement profile on the piles farther from the crest. Grouping effects and soil-structure interaction could also be considered.

Dynamic analysis could also be considered; however, as previously discussed, selection and scaling earthquake time-histories takes considerable time and effort. We can discuss this with you following the issue of this memo and the subsequent structural analysis, if requested.

6 CLOSURE

We trust this technical memo meets your needs at this time. If you have any questions on the information presented above, please do not hesitate to contact the undersigned.

WSP Canada Inc.

Prepared by:



Chiya Gharakhan, P.Eng.
Geotechnical Engineer

Reviewed by:



Stewart Dolan, P.Eng.
Lead Geotechnical Engineer

Approved by:



Donald Kaluza, P.Eng.
Senior Principal Geotechnical Engineer

CG/SD/DK/asd

Attachments: Attachment 1 – Critical Failure Surface under Seismic Loading (SLOPE/W)
Attachment 2 – Horizontal Displacement Profile
Attachment 3 – Plotted p–y curves seismic case (LPILE)
Attachment 4 – Tabulated p–y curve data for each soil layer seismic case (LPILE)
Attachment 5 – Plotted p–y curves Static case (LPILE)
Attachment 6 – Tabulated p–y curve data for each soil layer static case (LPILE)

https://wsponlinecan.sharepoint.com/sites/ca-ca0051793.7685/shared documents/06. deliverables/3.0_issued/ca0051793.7685-001-tm-rev0/ca0051793.7685-001-tm-rev0-piles p-y curves & disp 26jun_25.docx

ATTACHMENT 1

Critical Failure Surface under Seismic Loading (SLOPE/W)

ky=0.278

Factor of Safety: 1.004

Color	Name	Slope Stability Material Model	Unit Weight (kN/m³)	Effective Cohesion (kPa)	Effective Friction Angle (°)	Phi-B (°)	Piezometric Surface
	Bedrock	Bedrock (Impenetrable)					1
	Peat	Mohr-Coulomb	14	20	0	0	1
	Rock fill	Mohr-Coulomb	19	0	40	0	1
	Sandy Silt	Mohr-Coulomb	18	0	30	0	1
	Silty SAND	Mohr-Coulomb	18	0	30	0	1
	soft clay	Mohr-Coulomb	16	17	0	0	1
	Till	Mohr-Coulomb	22	10	38	0	1

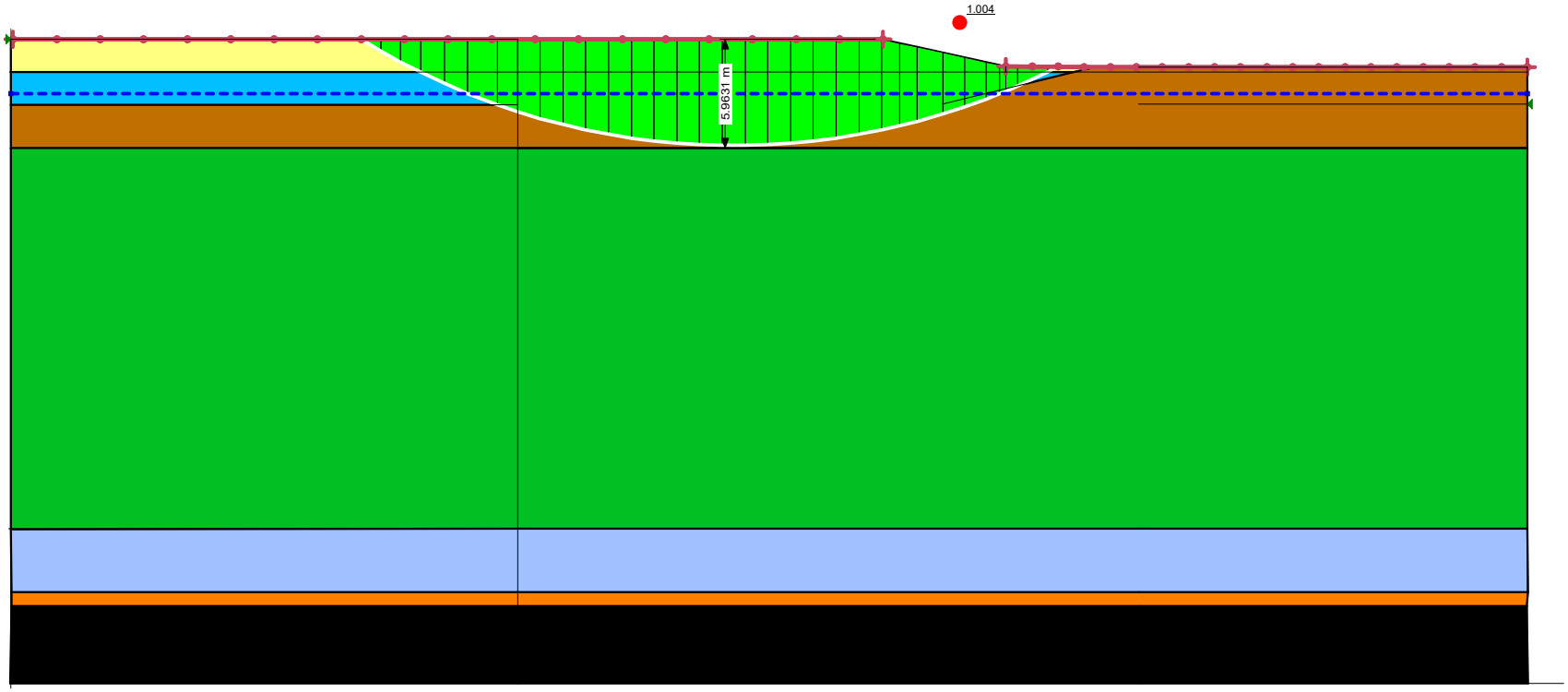

ATTACHMENT 2

Horizontal Displacement Profile

Post Seismic Ground Displacement at pile location -Bray & Macedo (2017)Subduction Event

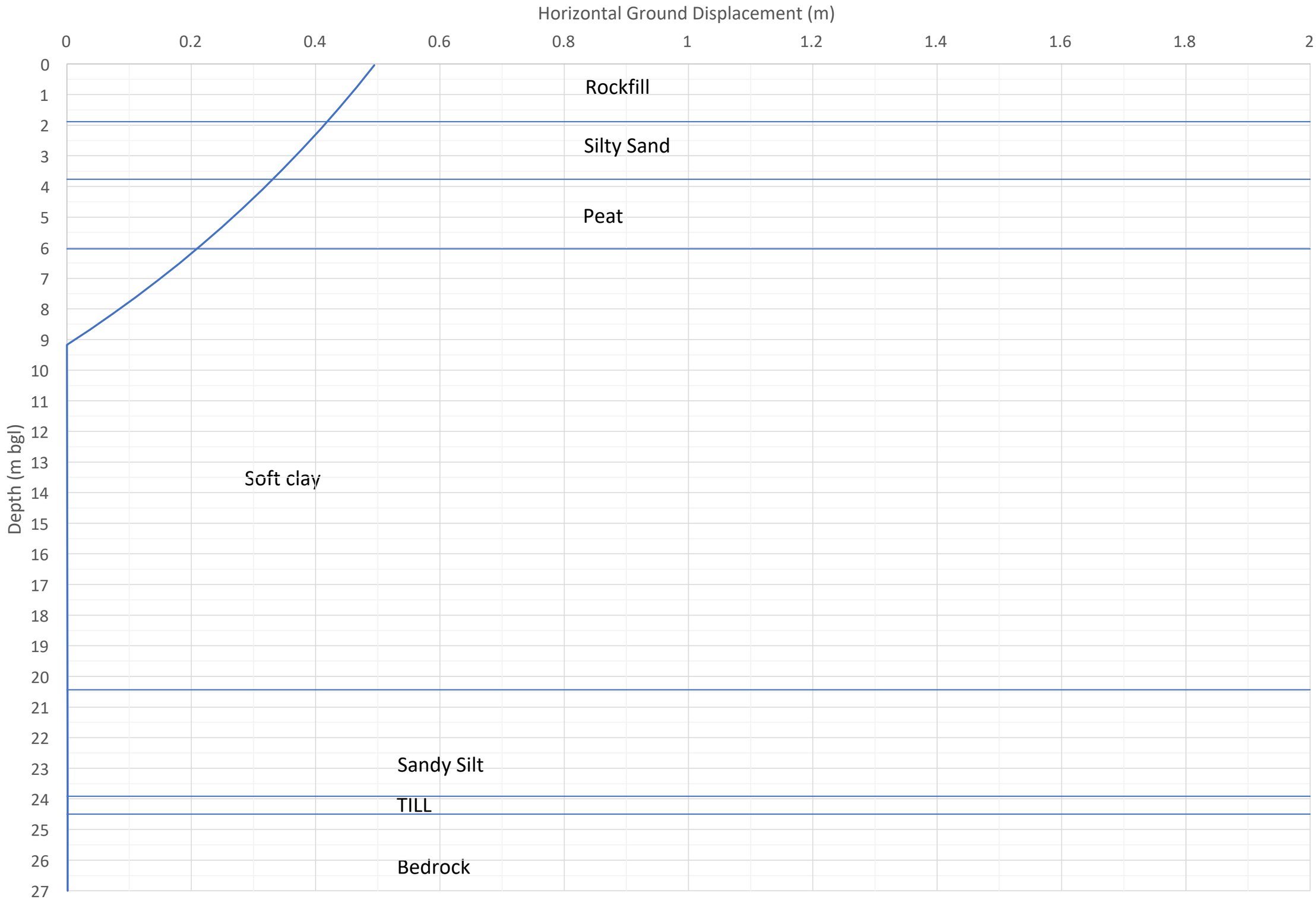

ATTACHMENT 3

Plotted p–y curves seismic case (LPILE)

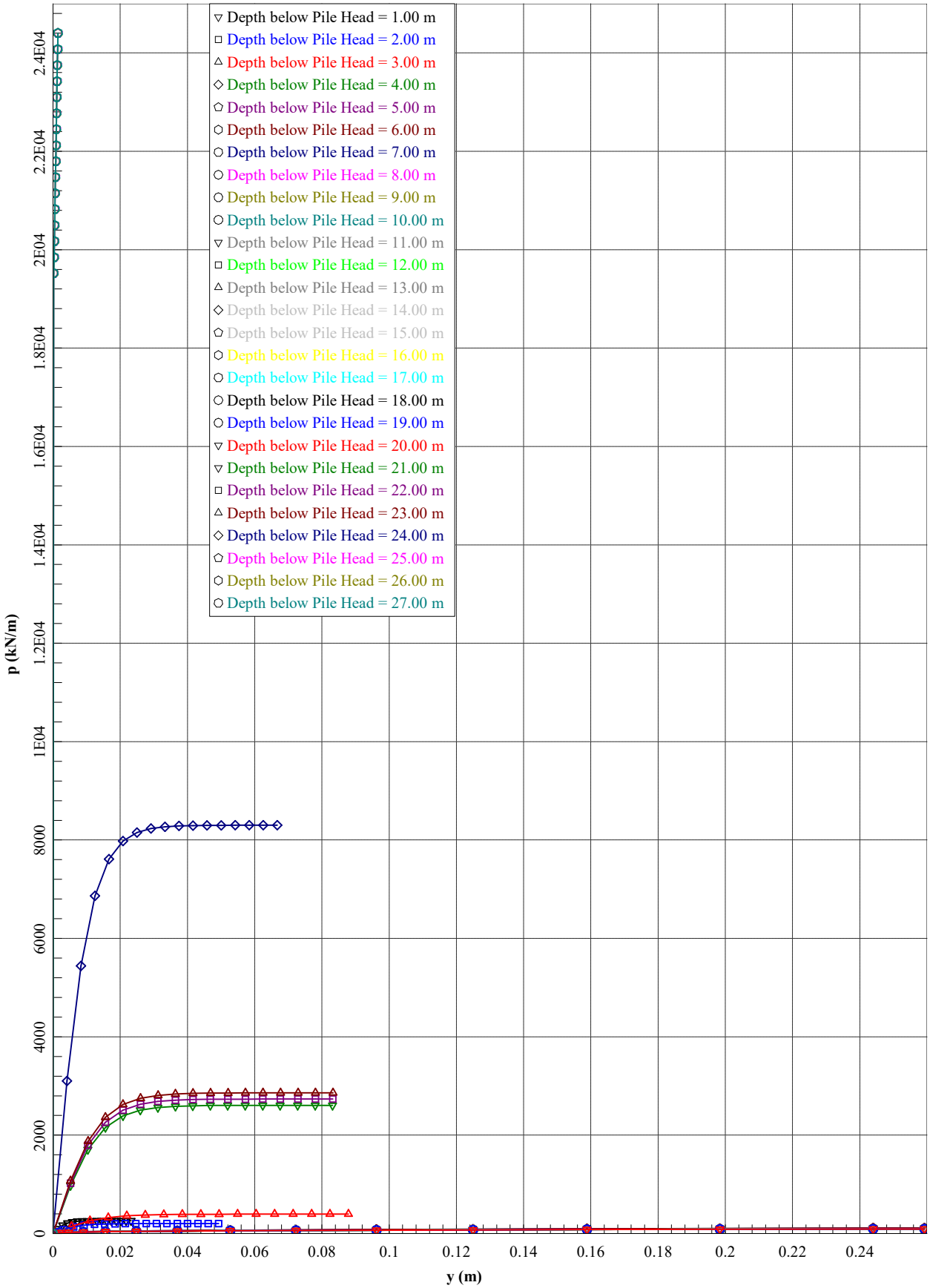
Depth below Pile Head = 1.00 m
Depth below Pile Head = 2.00 m
Depth below Pile Head = 3.00 m
Depth below Pile Head = 4.00 m
Depth below Pile Head = 5.00 m
Depth below Pile Head = 6.00 m
Depth below Pile Head = 7.00 m
Depth below Pile Head = 8.00 m
Depth below Pile Head = 9.00 m
Depth below Pile Head = 10.00 m
Depth below Pile Head = 11.00 m
Depth below Pile Head = 12.00 m
Depth below Pile Head = 13.00 m
Depth below Pile Head = 14.00 m
Depth below Pile Head = 15.00 m
Depth below Pile Head = 16.00 m
Depth below Pile Head = 17.00 m
Depth below Pile Head = 18.00 m
Depth below Pile Head = 19.00 m
Depth below Pile Head = 20.00 m
Depth below Pile Head = 21.00 m
Depth below Pile Head = 22.00 m
Depth below Pile Head = 23.00 m
Depth below Pile Head = 24.00 m
Depth below Pile Head = 25.00 m
Depth below Pile Head = 26.00 m
Depth below Pile Head = 27.00 m
p (kN/m)
0
2000
4000
6000
8000
1E04
1.2E04
1.4E04
1.6E04
1.8E04
2E04
2.2E04
2.4E04
y (m)
0
0.02
0.04
0.06
0.08
0.1
0.12
0.14
0.16
0.18
0.2
0.22
0.24

ATTACHMENT 4

Tabulated p–y curve data for each soil layer seismic case (LPILE)

p-y Curves

Legend!A1

X y (m)

Y p (kN/m)

Depth below Pile Head = 1.00 m		Depth below Pile Head = 2.00 m		Depth below Pile Head = 3.00 m		Depth below Pile Head = 4.00		Depth below Pile Head = 5.00 m		Depth below Pile Head = 6.00 m		Depth below Pile Head = 7.00 m	
X	Y	X	Y	X	Y	X	Y	X	Y	X	Y	X	Y
0	0	0	0	0	0	0	0	0	0	0	0	0	0
0.001449669	96.684243	0.003079827	75.884096	0.0054939	147.06766	7.2296E-05	7.32	7.2296E-05	7.32	7.22963E-05	7.32	7.22963E-05	6.222
0.002899337	169.67502	0.006159653	133.17201	0.01098779	258.09488	0.00057837	14.64	0.00057837	14.64	0.00057837	14.64	0.00057837	12.444
0.004349006	213.93282	0.00923948	167.90842	0.01648169	325.416	0.001952	21.96	0.001952	21.96	0.001952	21.96	0.001952	18.666
0.005798674	237.29676	0.012319306	186.24596	0.02197558	360.95518	0.00462696	29.28	0.00462696	29.28	0.004626963	29.28	0.004626963	24.888
0.007248343	248.73358	0.015399133	195.22232	0.02746948	378.35188	0.00903704	36.6	0.00903704	36.6	0.009037037	36.6	0.009037037	31.11
0.008698011	254.12497	0.01847896	199.45384	0.03296337	386.55279	0.015616	43.92	0.015616	43.92	0.015616	43.92	0.015616	37.332
0.01014768	256.62131	0.021558786	201.41313	0.03845727	390.35001	0.02479763	51.24	0.02479763	51.24	0.02479763	51.24	0.02479763	43.554
0.011597348	257.76758	0.024638613	202.31279	0.04395116	392.09361	0.0370157	58.56	0.0370157	58.56	0.037015704	58.56	0.037015704	49.776
0.013047017	258.2919	0.027718439	202.72431	0.04944506	392.89116	0.052704	65.88	0.052704	65.88	0.052704	65.88	0.052704	55.998
0.014496685	258.53131	0.030798266	202.91222	0.05493895	393.25533	0.0722963	73.2	0.0722963	73.2	0.072296296	73.2	0.072296296	62.22
0.015946354	258.64054	0.033878093	202.99795	0.06043285	393.42148	0.09622637	80.52	0.09622637	80.52	0.09622637	80.52	0.09622637	68.442
0.017396022	258.69035	0.036957919	203.03705	0.06592674	393.49726	0.124928	87.84	0.124928	87.84	0.124928	87.84	0.124928	74.664
0.018845691	258.71307	0.040037746	203.05488	0.07142064	393.53182	0.15883496	95.16	0.15883496	95.16	0.15883496	95.16	0.15883496	80.886
0.020295359	258.72343	0.043117572	203.06301	0.07691453	393.54757	0.19838104	102.48	0.19838104	102.48	0.19838104	102.48	0.19838104	87.108
0.021745028	258.72815	0.046197399	203.06672	0.08240843	393.55476	0.244	109.8	0.244	109.8	0.244	109.8	0.244	93.33
0.023194696	258.73031	0.049277226	203.06841	0.08790232	393.55803	0.25925	109.8	0.25925	109.8	0.25925	109.8	0.25925	93.33

Depth below Pile Head = 8.00 m		Depth below Pile Head = 9.00 m		Depth below Pile Head = 10.00 m		Depth below Pile Head = 11.0(		Depth below Pile Head = 12.00 m		Depth below Pile Head = 13.00 m		Depth below Pile Head = 14.00 m	
X	Y	X	Y	X	Y	X	Y	X	Y	X	Y	X	Y
0	0	0	0	0	0	0	0	0	0	0	0	0	0
7.22963E-05	6.222	7.22963E-05	6.222	7.2296E-05	6.222	7.2296E-05	6.222	7.2296E-05	6.222	7.22963E-05	6.222	7.22963E-05	6.222
0.00057837	12.444	0.00057837	12.444	0.00057837	12.444	0.00057837	12.444	0.00057837	12.444	0.00057837	12.444	0.00057837	12.444
0.001952	18.666	0.001952	18.666	0.001952	18.666	0.001952	18.666	0.001952	18.666	0.001952	18.666	0.001952	18.666
0.004626963	24.888	0.004626963	24.888	0.00462696	24.888	0.00462696	24.888	0.00462696	24.888	0.004626963	24.888	0.004626963	24.888
0.009037037	31.11	0.009037037	31.11	0.00903704	31.11	0.00903704	31.11	0.00903704	31.11	0.009037037	31.11	0.009037037	31.11
0.015616	37.332	0.015616	37.332	0.015616	37.332	0.015616	37.332	0.015616	37.332	0.015616	37.332	0.015616	37.332
0.02479763	43.554	0.02479763	43.554	0.02479763	43.554	0.02479763	43.554	0.02479763	43.554	0.02479763	43.554	0.02479763	43.554
0.037015704	49.776	0.037015704	49.776	0.0370157	49.776	0.0370157	49.776	0.0370157	49.776	0.037015704	49.776	0.037015704	49.776
0.052704	55.998	0.052704	55.998	0.052704	55.998	0.052704	55.998	0.052704	55.998	0.052704	55.998	0.052704	55.998
0.072296296	62.22	0.072296296	62.22	0.0722963	62.22	0.0722963	62.22	0.0722963	62.22	0.072296296	62.22	0.072296296	62.22
0.09622637	68.442	0.09622637	68.442	0.09622637	68.442	0.09622637	68.442	0.09622637	68.442	0.09622637	68.442	0.09622637	68.442
0.124928	74.664	0.124928	74.664	0.124928	74.664	0.124928	74.664	0.124928	74.664	0.124928	74.664	0.124928	74.664
0.15883496	80.886	0.15883496	80.886	0.15883496	80.886	0.15883496	80.886	0.15883496	80.886	0.15883496	80.886	0.15883496	80.886
0.19838104	87.108	0.19838104	87.108	0.19838104	87.108	0.19838104	87.108	0.19838104	87.108	0.19838104	87.108	0.19838104	87.108
0.244	93.33	0.244	93.33	0.244	93.33	0.244	93.33	0.244	93.33	0.244	93.33	0.244	93.33
0.25925	93.33	0.25925	93.33	0.25925	93.33	0.25925	93.33	0.25925	93.33	0.25925	93.33	0.25925	93.33

Depth below Pile Head = 15.00 m		Depth below Pile Head = 16.00 m		Depth below Pile Head = 17.00 m		Depth below Pile Head = 18.00 m		Depth below Pile Head = 19.00 m		Depth below Pile Head = 20.00 m		Depth below Pile Head = 21.00 m	
X	Y	X	Y	X	Y	X	Y	X	Y	X	Y	X	Y
0	0	0	0	0	0	0	0	0	0	0	0	0	0
7.22963E-05	6.222	7.22963E-05	6.222	7.22963E-05	6.222	7.22963E-05	6.222	7.22963E-05	6.222	7.22963E-05	6.222	0.005198968	974.20869
0.00057837	12.444	0.00057837	12.444	0.00057837	12.444	0.00057837	12.444	0.00057837	12.444	0.00057837	12.444	0.010397936	1709.6775
0.001952	18.666	0.001952	18.666	0.001952	18.666	0.001952	18.666	0.001952	18.666	0.001952	18.666	0.015596904	2155.6275
0.004626963	24.888	0.004626963	24.888	0.004626963	24.888	0.004626963	24.888	0.004626963	24.888	0.004626963	24.888	0.020795871	2391.047
0.009037037	31.11	0.009037037	31.11	0.009037037	31.11	0.009037037	31.11	0.009037037	31.11	0.009037037	31.11	0.025994839	2506.2865
0.015616	37.332	0.015616	37.332	0.015616	37.332	0.015616	37.332	0.015616	37.332	0.015616	37.332	0.031193807	2560.6111
0.02479763	43.554	0.02479763	43.554	0.02479763	43.554	0.02479763	43.554	0.02479763	43.554	0.02479763	43.554	0.036392775	2585.7648
0.037015704	49.776	0.037015704	49.776	0.037015704	49.776	0.037015704	49.776	0.037015704	49.776	0.037015704	49.776	0.041591743	2597.3148
0.052704	55.998	0.052704	55.998	0.052704	55.998	0.052704	55.998	0.052704	55.998	0.052704	55.998	0.046790711	2602.5979
0.072296296	62.22	0.072296296	62.22	0.072296296	62.22	0.072296296	62.22	0.072296296	62.22	0.072296296	62.22	0.051989679	2605.0103
0.09622637	68.442	0.09622637	68.442	0.09622637	68.442	0.09622637	68.442	0.09622637	68.442	0.09622637	68.442	0.057188647	2606.1109
0.124928	74.664	0.124928	74.664	0.124928	74.664	0.124928	74.664	0.124928	74.664	0.124928	74.664	0.062387614	2606.6129
0.15883496	80.886	0.15883496	80.886	0.15883496	80.886	0.15883496	80.886	0.15883496	80.886	0.15883496	80.886	0.067586582	2606.8418
0.19838104	87.108	0.19838104	87.108	0.19838104	87.108	0.19838104	87.108	0.19838104	87.108	0.19838104	87.108	0.07278555	2606.9461
0.244	93.33	0.244	93.33	0.244	93.33	0.244	93.33	0.244	93.33	0.244	93.33	0.077984518	2606.9937
0.25925	93.33	0.25925	93.33	0.25925	93.33	0.25925	93.33	0.25925	93.33	0.25925	93.33	0.083183486	2607.0154

Depth below Pile Head = 22.00 m		Depth below Pile Head = 23.00 m		Depth below Pile Head = 24.00 m		Depth below Pile Head = 25.00 m		Depth below Pile Head = 26.00 m		Depth below Pile Head = 27.00 m	
X	Y	X	Y	X	Y	X	Y	X	Y	X	Y
0	0	0	0	0	0	0	0	0	0	0	0
0.005202973	1021.3859	0.00520663	1068.563	0.004168217	3101.6069	0.000244	19520	0.000244	19520	0.000244	19520
0.010405946	1792.4706	0.010413261	1875.2637	0.008336433	5443.1331	0.000325333	19845.333	0.000325333	19845.333	0.000325333	19845.333
0.01560892	2260.0163	0.015619891	2364.405	0.01250465	6862.9126	0.000406667	20170.667	0.000406667	20170.667	0.000406667	20170.667
0.020811893	2506.8362	0.020826521	2622.6254	0.016672866	7612.422	0.000488	20496	0.000488	20496	0.000488	20496
0.026014866	2627.6563	0.026033152	2749.0261	0.020841083	7979.3123	0.000569333	20821.333	0.000569333	20821.333	0.000569333	20821.333
0.031217839	2684.6117	0.031239782	2808.6122	0.0250093	8152.2667	0.000650667	21146.667	0.000650667	21146.667	0.000650667	21146.667
0.036420813	2710.9834	0.036446412	2836.2021	0.029177516	8232.3489	0.000732	21472	0.000732	21472	0.000732	21472
0.041623786	2723.0927	0.041653042	2848.8707	0.033345733	8269.1208	0.000813333	21797.333	0.000813333	21797.333	0.000813333	21797.333
0.046826759	2728.6317	0.046859673	2854.6655	0.03751395	8285.9408	0.000894667	22122.667	0.000894667	22122.667	0.000894667	22122.667
0.052029732	2731.1609	0.052066303	2857.3115	0.041682166	8293.6211	0.000976	22448	0.000976	22448	0.000976	22448
0.057232706	2732.3148	0.057272933	2858.5187	0.045850383	8297.1251	0.001057333	22773.333	0.001057333	22773.333	0.001057333	22773.333
0.062435679	2732.8411	0.062479564	2859.0693	0.050018599	8298.7233	0.001138667	23098.667	0.001138667	23098.667	0.001138667	23098.667
0.067638652	2733.0811	0.067686194	2859.3204	0.054186816	8299.452	0.00122	23424	0.00122	23424	0.00122	23424
0.072841625	2733.1905	0.072892824	2859.4349	0.058355033	8299.7843	0.001301333	23749.333	0.001301333	23749.333	0.001301333	23749.333
0.078044599	2733.2404	0.078099455	2859.4871	0.062523249	8299.9358	0.001382667	24074.667	0.001382667	24074.667	0.001382667	24074.667
0.083247572	2733.2631	0.083306085	2859.5109	0.066691466	8300.0049	0.001464	24400	0.001464	24400	0.001464	24400

ATTACHMENT 5

Plotted p–y curves Static case (LPILE)

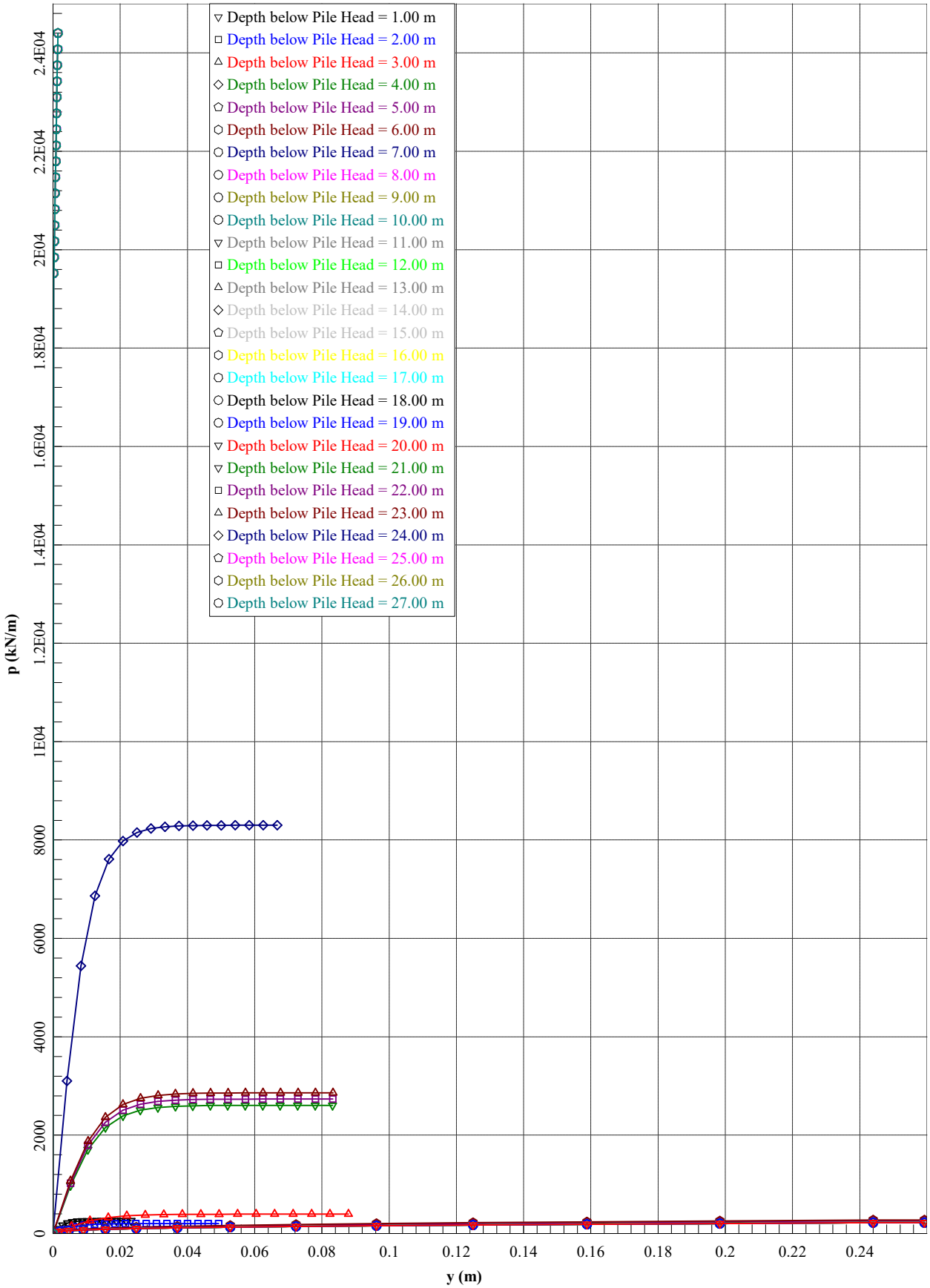
Depth below Pile Head = 1.00 m
Depth below Pile Head = 2.00 m
Depth below Pile Head = 3.00 m
Depth below Pile Head = 4.00 m
Depth below Pile Head = 5.00 m
Depth below Pile Head = 6.00 m
Depth below Pile Head = 7.00 m
Depth below Pile Head = 8.00 m
Depth below Pile Head = 9.00 m
Depth below Pile Head = 10.00 m
Depth below Pile Head = 11.00 m
Depth below Pile Head = 12.00 m
Depth below Pile Head = 13.00 m
Depth below Pile Head = 14.00 m
Depth below Pile Head = 15.00 m
Depth below Pile Head = 16.00 m
Depth below Pile Head = 17.00 m
Depth below Pile Head = 18.00 m
Depth below Pile Head = 19.00 m
Depth below Pile Head = 20.00 m
Depth below Pile Head = 21.00 m
Depth below Pile Head = 22.00 m
Depth below Pile Head = 23.00 m
Depth below Pile Head = 24.00 m
Depth below Pile Head = 25.00 m
Depth below Pile Head = 26.00 m
Depth below Pile Head = 27.00 m
p (kN/m)
0
2000
4000
6000
8000
1E04
1.2E04
1.4E04
1.6E04
1.8E04
2E04
2.2E04
2.4E04
y (m)
0
0.02
0.04
0.06
0.08
0.1
0.12
0.14
0.16
0.18
0.2
0.22
0.24

ATTACHMENT 6

Tabulated p–y curve data for each soil layer static case (LPILE)

p-y Curves

Legend!A1

X y (m)

Y p (kN/m)

Depth below Pile Head = 1.00 m		Depth below Pile Head = 2.00 m		Depth below Pile Head = 3.00 m		Depth below Pile Head = 4.00 m		Depth below Pile Head = 5.00 m		Depth below Pile Head = 6.00 m		Depth below Pile Head = 7.00 m	
X	Y	X	Y	X	Y	X	Y	X	Y	X	Y	X	Y
0	0	0	0	0	0	0	0	0	0	0	0	0	0
0.001449669	96.684243	0.003079827	75.884096	0.005493895	147.06766	7.22963E-05	15.4588	7.2296E-05	17.288133	7.22963E-05	18.3	7.22963E-05	14.64
0.002899337	169.67502	0.006159653	133.17201	0.01098779	258.09488	0.00057837	30.9176	0.00057837	34.576267	0.00057837	36.6	0.00057837	29.28
0.004349006	213.93282	0.00923948	167.90842	0.016481685	325.416	0.001952	46.3764	0.001952	51.8644	0.001952	54.9	0.001952	43.92
0.005798674	237.29676	0.012319306	186.24596	0.02197558	360.95518	0.004626963	61.8352	0.00462696	69.152533	0.004626963	73.2	0.004626963	58.56
0.007248343	248.73358	0.015399133	195.22232	0.027469475	378.35188	0.009037037	77.294	0.00903704	86.440667	0.009037037	91.5	0.009037037	73.2
0.008698011	254.12497	0.01847896	199.45384	0.03296337	386.55279	0.015616	92.7528	0.015616	103.7288	0.015616	109.8	0.015616	87.84
0.01014768	256.62131	0.021558786	201.41313	0.038457265	390.35001	0.02479763	108.2116	0.02479763	121.01693	0.02479763	128.1	0.02479763	102.48
0.011597348	257.76758	0.024638613	202.31279	0.04395116	392.09361	0.037015704	123.6704	0.0370157	138.30507	0.037015704	146.4	0.037015704	117.12
0.013047017	258.2919	0.027718439	202.72431	0.049445055	392.89116	0.052704	139.1292	0.052704	155.5932	0.052704	164.7	0.052704	131.76
0.014496685	258.53131	0.030798266	202.91222	0.05493895	393.25533	0.072296296	154.588	0.0722963	172.88133	0.072296296	183	0.072296296	146.4
0.015946354	258.64054	0.033878093	202.99795	0.060432845	393.42148	0.09622637	170.0468	0.09622637	190.16947	0.09622637	201.3	0.09622637	161.04
0.017396022	258.69035	0.036957919	203.03705	0.06592674	393.49726	0.124928	185.5056	0.124928	207.4576	0.124928	219.6	0.124928	175.68
0.018845691	258.71307	0.040037746	203.05488	0.071420635	393.53182	0.15883496	200.9644	0.15883496	224.74573	0.15883496	237.9	0.15883496	190.32
0.020295359	258.72343	0.043117572	203.06301	0.07691453	393.54757	0.19838104	216.4232	0.19838104	242.03387	0.19838104	256.2	0.19838104	204.96
0.021745028	258.72815	0.046197399	203.06672	0.082408425	393.55476	0.244	231.882	0.244	259.322	0.244	274.5	0.244	219.6
0.023194696	258.73031	0.049277226	203.06841	0.087902319	393.55803	0.25925	231.882	0.25925	259.322	0.25925	274.5	0.25925	219.6

Depth below Pile Head = 8.00 m		Depth below Pile Head = 9.00 m		Depth below Pile Head = 10.00 m		Depth below Pile Head = 11.00 m		Depth below Pile Head = 12.00 m		Depth below Pile Head = 13.00 m		Depth below Pile Head = 14.00 m	
X	Y	X	Y	X	Y	X	Y	X	Y	X	Y	X	Y
0	0	0	0	0	0	0	0	0	0	0	0	0	0
7.22963E-05	14.64	7.22963E-05	14.64	7.22963E-05	14.64	7.22963E-05	14.64	7.2296E-05	14.64	7.22963E-05	14.64	7.22963E-05	14.64
0.00057837	29.28	0.00057837	29.28	0.00057837	29.28	0.00057837	29.28	0.00057837	29.28	0.00057837	29.28	0.00057837	29.28
0.001952	43.92	0.001952	43.92	0.001952	43.92	0.001952	43.92	0.001952	43.92	0.001952	43.92	0.001952	43.92
0.004626963	58.56	0.004626963	58.56	0.004626963	58.56	0.004626963	58.56	0.00462696	58.56	0.004626963	58.56	0.004626963	58.56
0.009037037	73.2	0.009037037	73.2	0.009037037	73.2	0.009037037	73.2	0.00903704	73.2	0.009037037	73.2	0.009037037	73.2
0.015616	87.84	0.015616	87.84	0.015616	87.84	0.015616	87.84	0.015616	87.84	0.015616	87.84	0.015616	87.84
0.02479763	102.48	0.02479763	102.48	0.02479763	102.48	0.02479763	102.48	0.02479763	102.48	0.02479763	102.48	0.02479763	102.48
0.037015704	117.12	0.037015704	117.12	0.037015704	117.12	0.037015704	117.12	0.0370157	117.12	0.037015704	117.12	0.037015704	117.12
0.052704	131.76	0.052704	131.76	0.052704	131.76	0.052704	131.76	0.052704	131.76	0.052704	131.76	0.052704	131.76
0.072296296	146.4	0.072296296	146.4	0.072296296	146.4	0.072296296	146.4	0.0722963	146.4	0.072296296	146.4	0.072296296	146.4
0.09622637	161.04	0.09622637	161.04	0.09622637	161.04	0.09622637	161.04	0.09622637	161.04	0.09622637	161.04	0.09622637	161.04
0.124928	175.68	0.124928	175.68	0.124928	175.68	0.124928	175.68	0.124928	175.68	0.124928	175.68	0.124928	175.68
0.15883496	190.32	0.15883496	190.32	0.15883496	190.32	0.15883496	190.32	0.15883496	190.32	0.15883496	190.32	0.15883496	190.32
0.19838104	204.96	0.19838104	204.96	0.19838104	204.96	0.19838104	204.96	0.19838104	204.96	0.19838104	204.96	0.19838104	204.96
0.244	219.6	0.244	219.6	0.244	219.6	0.244	219.6	0.244	219.6	0.244	219.6	0.244	219.6
0.25925	219.6	0.25925	219.6	0.25925	219.6	0.25925	219.6	0.25925	219.6	0.25925	219.6	0.25925	219.6

Depth below Pile Head = 15.00 m		Depth below Pile Head = 16.00 m		Depth below Pile Head = 17.00 m		Depth below Pile Head = 18.00 m		Depth below Pile Head = 19.00 m		Depth below Pile Head = 20.00 m		Depth below Pile Head = 21.00 m	
X	Y	X	Y	X	Y	X	Y	X	Y	X	Y	X	Y
0	0	0	0	0	0	0	0	0	0	0	0	0	0
7.22963E-05	14.64	7.22963E-05	14.64	7.22963E-05	14.64	7.22963E-05	14.64	7.2296E-05	14.64	7.22963E-05	14.64	0.005198968	974.20869
0.00057837	29.28	0.00057837	29.28	0.00057837	29.28	0.00057837	29.28	0.00057837	29.28	0.00057837	29.28	0.010397936	1709.6775
0.001952	43.92	0.001952	43.92	0.001952	43.92	0.001952	43.92	0.001952	43.92	0.001952	43.92	0.015596904	2155.6275
0.004626963	58.56	0.004626963	58.56	0.004626963	58.56	0.004626963	58.56	0.00462696	58.56	0.004626963	58.56	0.020795871	2391.047
0.009037037	73.2	0.009037037	73.2	0.009037037	73.2	0.009037037	73.2	0.00903704	73.2	0.009037037	73.2	0.025994839	2506.2865
0.015616	87.84	0.015616	87.84	0.015616	87.84	0.015616	87.84	0.015616	87.84	0.015616	87.84	0.031193807	2560.6111
0.02479763	102.48	0.02479763	102.48	0.02479763	102.48	0.02479763	102.48	0.02479763	102.48	0.02479763	102.48	0.036392775	2585.7648
0.037015704	117.12	0.037015704	117.12	0.037015704	117.12	0.037015704	117.12	0.0370157	117.12	0.037015704	117.12	0.041591743	2597.3148
0.052704	131.76	0.052704	131.76	0.052704	131.76	0.052704	131.76	0.052704	131.76	0.052704	131.76	0.046790711	2602.5979
0.072296296	146.4	0.072296296	146.4	0.072296296	146.4	0.072296296	146.4	0.0722963	146.4	0.072296296	146.4	0.051989679	2605.0103
0.09622637	161.04	0.09622637	161.04	0.09622637	161.04	0.09622637	161.04	0.09622637	161.04	0.09622637	161.04	0.057188647	2606.1109
0.124928	175.68	0.124928	175.68	0.124928	175.68	0.124928	175.68	0.124928	175.68	0.124928	175.68	0.062387614	2606.6129
0.15883496	190.32	0.15883496	190.32	0.15883496	190.32	0.15883496	190.32	0.15883496	190.32	0.15883496	190.32	0.067586582	2606.8418
0.19838104	204.96	0.19838104	204.96	0.19838104	204.96	0.19838104	204.96	0.19838104	204.96	0.19838104	204.96	0.07278555	2606.9461
0.244	219.6	0.244	219.6	0.244	219.6	0.244	219.6	0.244	219.6	0.244	219.6	0.077984518	2606.9937
0.25925	219.6	0.25925	219.6	0.25925	219.6	0.25925	219.6	0.25925	219.6	0.25925	219.6	0.083183486	2607.0154

Depth below Pile Head = 22.00 m		Depth below Pile Head = 23.00 m		Depth below Pile Head = 24.00 m		Depth below Pile Head = 25.00 m		Depth below Pile Head = 26.00 m		Depth below Pile Head = 27.00 m	
X	Y	X	Y	X	Y	X	Y	X	Y	X	Y
0	0	0	0	0	0	0	0	0	0	0	0
0.005202973	1021.3859	0.00520663	1068.563	0.004168217	3101.6069	0.000244	19520	0.000244	19520	0.000244	19520
0.010405946	1792.4706	0.010413261	1875.2637	0.008336433	5443.1331	0.000325333	19845.333	0.00032533	19845.333	0.000325333	19845.333
0.01560892	2260.0163	0.015619891	2364.405	0.01250465	6862.9126	0.000406667	20170.667	0.00040667	20170.667	0.000406667	20170.667
0.020811893	2506.8362	0.020826521	2622.6254	0.016672866	7612.422	0.000488	20496	0.000488	20496	0.000488	20496
0.026014866	2627.6563	0.026033152	2749.0261	0.020841083	7979.3123	0.000569333	20821.333	0.00056933	20821.333	0.000569333	20821.333
0.031217839	2684.6117	0.031239782	2808.6122	0.0250093	8152.2667	0.000650667	21146.667	0.00065067	21146.667	0.000650667	21146.667
0.036420813	2710.9834	0.036446412	2836.2021	0.029177516	8232.3489	0.000732	21472	0.000732	21472	0.000732	21472
0.041623786	2723.0927	0.041653042	2848.8707	0.033345733	8269.1208	0.000813333	21797.333	0.00081333	21797.333	0.000813333	21797.333
0.046826759	2728.6317	0.046859673	2854.6655	0.03751395	8285.9408	0.000894667	22122.667	0.00089467	22122.667	0.000894667	22122.667
0.052029732	2731.1609	0.052066303	2857.3115	0.041682166	8293.6211	0.000976	22448	0.000976	22448	0.000976	22448
0.057232706	2732.3148	0.057272933	2858.5187	0.045850383	8297.1251	0.001057333	22773.333	0.00105733	22773.333	0.001057333	22773.333
0.062435679	2732.8411	0.062479564	2859.0693	0.050018599	8298.7233	0.001138667	23098.667	0.00113867	23098.667	0.001138667	23098.667
0.067638652	2733.0811	0.067686194	2859.3204	0.054186816	8299.452	0.00122	23424	0.00122	23424	0.00122	23424
0.072841625	2733.1905	0.072892824	2859.4349	0.058355033	8299.7843	0.001301333	23749.333	0.00130133	23749.333	0.001301333	23749.333
0.078044599	2733.2404	0.078099455	2859.4871	0.062523249	8299.9358	0.001382667	24074.667	0.00138267	24074.667	0.001382667	24074.667
0.083247572	2733.2631	0.083306085	2859.5109	0.066691466	8300.0049	0.001464	24400	0.001464	24400	0.001464	24400

TECHNICAL MEMORANDUM

DATE April 2, 2026 **Reference No.** CA0051793.7685-005-TM-Rev0

TO Catherine Laurie, AScT
West Shore Environmental Services

CC Brett Tataryn; Larry Parkinson; Jeff Howard; Greg Carson; Prabhvir Dhillon

FROM Stewart Dolan, P.Eng. **EMAIL stewart.dolan@wsp.com**

DELEM DRIVE PUMP STATION: GEOTECHNICAL COMMENTS ON CONSTRUCTION AND SETTLEMENT

1 INTRODUCTION

WSP Canada Inc. (WSP) has prepared this technical memorandum for West Shore Environmental Services (WSES) to provide revised geotechnical comments on construction and settlement regarding the design changes for the Delem Drive Pump Station.

The issued for 90% review drawings provided by Colquitz Engineering dated January 9, 2026 show the proposed pump station comprises a genset and control kiosk supported by a concrete slab-on-grade bearing directly onto the existing rock fills. The concrete slab is 7 m long, 4.5 m wide and 600 mm thick. A wet well will be located approximately 1.5 m north of the kiosk slab and buried utilities will connect between the wet well and kiosk. The 3.05 m diameter wet well will rest atop a 600mm thick concrete slab buried about 4.35 m below grade: the top of the wet well is shown at EL.67.0 m, and the top of the slab is EL.62.65 m. The concrete slab will be supported on 610 mm diameter steel pipe piles driven to refusal on glacial till or bedrock at around 24.5 m below the road level.

The ground conditions in the Delem Drive area are geotechnically challenging and consists of about 1.0 m of sand and gravel fill, overlying about 2.0 m of silty sand fill, overlying 2.5 to 3.0 m of peat, overlying about 14 m of soft compressible clay, overlying sandy silt/clayey sand, overlying bedrock, which is about 24.5 m below existing grade. The lower approximate 1.0 m of the silty sand fill is mixed with organics, which presumably occurred as part of the preloading of Delem Drive road development. Adjacent to Delem Drive to the east, lies natural undisturbed peat which is approximately 2 m below the existing grade of Delem Drive. Groundwater is around the surface elevation of the adjacent ground, approximately 2 m below the road surface.

This memo supersedes the following two memos which were previously issued before the design changes occurred:

- *'Settlement Estimates for New Fill Over Peat and Soft Soils'* dated August 22, 2025, Reference No. CA0051793.7685-003-TM-Rev0.
- *'Geotechnical Comments on Construction Sequencing'* dated October 9, 2025, Reference No. CA0051793.7685-004-TM-RevA (draft).

2 SUMMARY OF DESIGN CHANGES

Since issuing the above referenced memos the following design changes have been made:

- The widening of the gravel pad by placing new rock fill placed over undisturbed peat to the east has been eliminated.
  - WSP understands no significant thicknesses of new fills are proposed and the grade will not be increased above current grades.
  - This eliminates the previous issue of primary settlement by placing fills over unconsolidated peat.
- The wet well will be supported by steel pipe piles driven to bedrock.
- The genset and kiosk will be founded on a slab on grade bearing directly on the rock fills.
- All temporary works design including temporary shoring and dewatering will be the responsibility of the Contractor.

The following comments are made regarding how these design changes affect construction and long-term performance. The comments made in the superseded memos are no longer applicable to the current design.

3 CONSTRUCTION CONSIDERATIONS

Given the gravel pad will not be widened, all previous comments regarding sequencing placing fills and primary consolidation no longer apply. If new fills are proposed above undisturbed soils WSP must be notified to review how this would affect the project.

WSP understands that the Contractor will be responsible for the design and construction of temporary shoring and dewatering. As discussed previously we do not consider an open excavation practical for this site given the design depth of the wet well, the groundwater level and high permeability of the rock fills. We anticipate shoring would likely comprise construction of a sheet piled or braced cofferdam type structure to support the temporary excavation and provide a cutoff to allow for temporary dewatering of the excavation.

Construction sequencing of the wet well piles should be considered. It may be more practical to drive the steel pipe piles to bedrock from the existing ground surface, to eliminate the need to place a piling rig into the base of the temporary excavation. The excavation would then be completed around the in-place piles, with the piles then cutoff at the design pile head elevation.

Backfilling between the temporary support and permanent wet well should be reviewed. If engineered fill is used and the temporary shoring is removed, the dense fills would likely push out into the softer adjacent peat once the temporary shoring is removed. This could be mitigated by filling the void with controlled density fill (CDF) strong enough to support itself one the shoring is removed, or by leaving the shoring in place.

WSP, the design team, and Owner, must review the Contractor’s work plan, including temporary works design, before construction begins to assess how it could affect the permanent works.

4 SETTLEMENT CONSIDERATIONS

WSP understands lightweight cellular concrete will not be used and we make the following comments regarding long term settlements, given the design changes described previously.

Based on the preload and settlement monitoring reported by Ryzuk[1] [2] [3] much of the primary consolidation appears to be completed. 770mm of total settlement was reported at Station G which was located close to the pump station. This total settlement is consistent with the primary settlement estimates of around 530 to 700 mm for a 2 m high embankment by WSP[4] [5]. Note this area was subjected to an increased preload with total height of around 3 m from March 2023 to at least December 2023. Provided no new fills are placed over areas of undisturbed peat, significant primary consolidation is not expected to occur.

Secondary consolidation in the order of 100 to 200 mm is expected to occur within the peat over the next 20 to 30 years. This is likely to manifest in surface settlements, and as differential settlements between the pile supported wet well and adjacent components that are not supported on piles such as the genset and kiosk.

WSP understands the ongoing settlement from secondary consolidation will be managed by care and maintenance of the road surface, and by allowing for this differential settlement in design by use of flexible connections and materials. We note this long-term differential settlement is the same order of magnitude as the likely differential earthquake induced horizontal displacements between pile supported and non-pile supported components.

5 FIELD REVIEWS

WSP anticipates that we would be on site during construction to verify our design expectations. The extent of the field reviews will depend on the contractor's methodology, but in general, WSP will need to be on site for:

- Review of subgrade conditions prior to placement of any fill materials (including cellular concrete, if used).
- Review of materials to be placed, and the placement of fill materials.
- Review during pile installations to verify piles are driven deep enough for lateral resistance.

[1] Ryzuk Geotechnical memorandum '*Settlement Monitoring*' dated December 8, 2023 (Reference No. 9899-17)

[2] Ryzuk Geotechnical memorandum '*Industrial Access Park Road Access – Settlement Monitoring*' dated September 28, 2022 (Reference No. 8724-1)

[3] Ryzuk Geotechnical memorandum '*Industrial Access Park Road Access – Settlement Monitoring*' dated April 8, 2022 (Reference No. 8724-1)

[4] WSP Canada Inc. report '*Sooke Road Site Characterization – Geotechnical Report*' dated August 23, 2023 (draft). (Reference No. CA0024295.3529)

[5] WSP Canada Inc. technical memorandum '*Settlement Estimates for New Fill Over Peat and Soft Soil*' dated August 22, 2025 (Reference No. CA0051793.7685-003-TM-Rev0)

6 CLOSING

This memo was prepared in accordance with our services contract with West Shore Environmental Services. If you have any questions or concerns, please contact the undersigned at your convenience.

WSP Canada Inc.

WSP Canada Inc.
Engineers & Geoscientists BC
Permit #1000200



Stewart Dolan, P.Eng.
Lead Geotechnical Engineer

Donald Kaluza, P.Eng.
Senior Principal Engineer

SD/DK/jts

Distribution: catherine.laurie@nexuswg.com
jeff.howard@colquitz.ca
brett.tataryn@nexuswg.com
gcarson@gcengineering.org
pdhillon@gcengineering.org
larryp.civil.consulting@gmail.com
michael.scopick@pbxeng.com

Attachments: Colquitz Engineering '*Issued for 90% Review*' Drawings – Sheets C1 to C5

https://wsponlinecan.sharepoint.com/sites/ca-ca0051793.7685/shared documents/06. deliverables/3.0_issued/ca0051793.7685-005-tm-rev0/ca0051793.7685-005-tm-rev0-construction & settlement-02apr_26.docx

GENERAL NOTES

1. DIMENSIONS ARE IN METRIC UNLESS OTHERWISE NOTED.
2. ELEVATIONS ARE IN METERS TO GEODETIC DATUM.
3. WHEN A CONFLICT BETWEEN THE SPECIFICATIONS ARISES, THE MOST STRINGENT SHALL APPLY.
4. EXCAVATE AND CONFIRM HORIZONTAL AND VERTICAL LOCATIONS OF ALL EXISTING UNDERGROUND WORKS AT CONNECTION AND CROSSING POINTS 48 HOURS PRIOR TO STARTING CONSTRUCTION ON ANY NEW WORK, IMMEDIATELY INFORM ENGINEER OF ANY CONFLICTS.
5. WHERE A TRENCH IS UNDER OR WITHIN 1.0m OF THE EDGE OF A ROAD OR DRIVEWAY, USE PITRUN GRAVEL BACKFILL FROM THE TOP OF THE PIPE BEDDING TO THE TOP OF THE ROAD, PARKING OR DRIVEWAY SUBGRADE.
6. DO NOT START ANY BACKFILL OPERATION UNTIL THE WORKS HAVE BEEN INSPECTED BY THE ENGINEER.
7. AFTER CONSTRUCTION, RESTORE WORK AREAS AND ALL EXISTING FEATURES TO THEIR ORIGINAL CONDITION OR BETTER AND AS FOLLOWS:
   - REINSTATE TRENCHES IN ACCORDANCE WITH BYLAW 1000 DETAIL G4 & G5.
   - REINSTATE ASPHALT EITHER HALF-LANE OF FULL LANE ALONG ROADWAYS AS REQUIRED BASED ON GROUND CONDITIONS.
   - ALL LANDSCAPING, RETAINING WALLS, DITCHES, CULVERTS, SEEPAGE PITS, STREET SIGNAGE, AND IRRIGATION TO BE REINSTATED TO THE ORIGINAL CONDITION OR BETTER. PROVIDE 150 mm DEPTH TOPSOIL AND SEED WHERE REQUIRED.
   - REINSTATE ROAD SHOULDERS WITH 100 mm RAP COMPACTED TO 95% MODIFIED PROTRACTOR DENSITY.
   - FOR TEMPORARY TRENCH RESTORATION, PLACE COLD MIX ON DISTURBED, PREVIOUSLY PAVED AREAS PRIOR TO EACH WEEKEND OR HOLIDAY SHUTDOWNS.
8. MAINTAIN VEHICULAR AND PEDESTRIAN ACCESS ON ALL ROADS AND PARKING AREAS DURING CONSTRUCTION IN ACCORDANCE WITH TRAFFIC MANAGEMENT PLAN.
9. ADJUST ALL PROPOSED AND EXISTING APPURTENANCES TO MEET THE FINAL DESIGN GRADES.
10. COMPACT TRENCH BACKFILL AND ROAD BASE TO 100% STANDARD PROCTOR DENSITY FOR THE TOP 300mm AND 95% STANDARD PROCTOR BELOW.
11. DENSO TAPE AND WRAP ALL BURIED COUPLINGS, JOINT RESTRAINTS AND TIE RODS.
12. UNLESS OTHERWISE NOTED ALL CONSTRUCTION AND MATERIALS TO BE IN ACCORDANCE WITH CONTRACT DOCUMENTS FOR WSES PROJECT NO. 225-24, THE CITY OF LANGFORD BYLAW 1000, THE CITY OF LANGFORD SUPPLEMENTS TO THE MASTER MUNICIPAL CONSTRUCTION DOCUMENTS, AND MASTER MUNICIPAL CONSTRUCTION DOCUMENTS, (VOLUME II).
13. OBTAIN AND PAY FOR A BY-LAW 33 PERMIT TO CONSTRUCT WORKS ON A MUNICIPAL RIGHT OF WAY FROM THE CITY OF LANGFORD ENGINEERING DEPARTMENT 48 HOURS PRIOR TO THE START OF ANY CONSTRUCTION.
14. LOCATION OF EXISTING SITE SERVICES WERE OBTAINED INFORMATION PROVIDED BY CRD WATER, FORTIS, CALBE, TELUS, AND BC HYDRO.
15. BC HYDRO, TELUS, CABLE, AND FORTIS FACILITIES ARE SHOWN SCHEMATIC ON THE DRAWINGS, CONTACT "BC ONE CALL" AT 1-800-474-6886 A MINIMUM OF 48 HOURS PRIOR TO START OF CONSTRUCTION.
16. ENSURE THAT ALL EXISTING SERVICES REMAIN IN SERVICE DURING CONSTRUCTION.
17. PROTECT ALL TREES FROM DAMAGE DURING CONSTRUCTION, HAND DIG WHERE ROOTS OVER 50 mm Ø ARE ENCOUNTERED. OBTAIN PERMISSION FROM THE ENGINEER AND CITY OF LANGFORD PRIOR TO REMOVAL OF ANY TREES ON PRIVATE OR PUBLIC PROPERTY.
18. CONTRACTOR TO MAINTAIN AN UP-TO-DATE SET OF AS-CONSTRUCTED DRAWINGS AT ALL TIMES. AS-CONSTRUCTED DRAWINGS TO BE DELIVERED TO THE ENGINEER PRIOR TO SUBSTANTIAL PERFORMANCE FOR PREPARATIONS OF FINAL DRAWINGS.
19. ALL MANHOLES TO BE 1050 mm Ø UNLESS OTHERWISE NOTED ON DRAWINGS.
20. ASPHALT REINSTATEMENT TO BE REVIEWED WITH THE CITY OF LANGFORD AND WSES PRIOR TO PAVING TO CONFIRM FINAL PAVING EXTENTS.
21. NOTIFY CITY OF LANGFORD ENGINEERING DEPARTMENT IF RE-INSTATEMENT/RE-CONSTRUCTION OF ANY ROCK PITS REQUIRED.
22. CONTRACTOR TO SUPPLY TRAFFIC MANAGEMENT PLAN AND PARKING PLAN TO CITY FOR REVIEW AND APPROVAL PRIOR TO ISSUANCE OF BYLAW 33 PERMIT.
23. ANY DISTURBED MONUMENTS OR PINS TO BE RE-INSTATEMENT BY BCLS AT CONTRACTORS EXPENSE.

SEWER

1. GRAVITY SEWER PIPE UP TO AND INCLUDING 150mm DIAMETER TO BE PVC DR28, AND DR35 FOR 200mm DIAMETER AND OVER. PIPE TO BE C.S.A. APPROVED PVC.
2. SEWER FORCEMAIN PRESSURE PIPE TO BE AS NOTED. PRESSURE TEST TO 150psi FOR ONE HOUR WITH ZERO LEAKAGE.
3. ALL FORCE MAIN BENDS AND TEES TO HAVE TRUST BLOCKS AND JOINT RESTRAINTS.

HYDRO, TELEPHONE, CABLE, STREET LIGHTING AND GAS (SEE PBX DRAWINGS & SPECIFICATIONS)

1. CONTACT "BC ONE CALL" AT 1-800-474-6886 A MINIMUM OF 48 HOURS PRIOR TO START OF CONSTRUCTION.
2. BC HYDRO, TELUS, CABLE AND GAS FACILITIES ARE SHOWN SCHEMATICALLY ON THIS DRAWING. REFER TO UTILITY COMPANY DRAWINGS FOR CONSTRUCTION DETAILS.
3. CONSTRUCT UNDERGROUND HYDRO, TELEPHONE AND CABLE AS SPECIFIED AND IN ACCORDANCE WITH BC HYDRO, TELUS AND SHAW CABLE STANDARD SPECIFICATIONS AND DRAWINGS.

ENVIRONMENTAL PROTECTION NOTES

1. ALL MACHINES SHALL CARRY SPILL KITS.
2. CONTRACTOR TO CONFORM TO LANGFORD WATERCOURSE AND DRAINAGE REGULATION BYLAWS DURING CONSTRUCTION. ANY REQUIRED PERMITS TO BE OBTAINED BY CONTRACTOR PRIOR TO CONSTRUCTION.
3. THE CONTRACTOR SHALL PROVIDE AND POST AN EMERGENCY RESPONSE PLAN IN CASE OF ANY SPILLS.
4. PROTECT ALL TREES FROM DAMAGE DURING CONSTRUCTION. HAND DIG WHERE ROOTS OVER 50mm ARE ENCOUNTERED.

GEOTECHNICAL

1. EXCAVATED SLOPES AND FOUNDATIONS TO BE INSPECTED AND APPROVED BY THE GEOTECHNICAL ENGINEER.
2. SHORING DESIGN SHALL BE PERFORMED BY THE CONTRACTOR'S PROFESSIONAL ENGINEER.
3. EXTENT OF EXCAVATIONS SHALL BE LIMITED SUCH THAT ALL ROADWAYS REMAIN UNOBSTRUCTED DURING CONSTRUCTION AND EXISTING FEATURES SUCH AS TREES, BUILDINGS AND BURIED UTILITIES ARE UNDISTURBED UNLESS NOTED OTHERWISE.
4. REFER TO WSP GEOTECHNICAL REPORT DATED MAY 27, 2025 FOR SOIL AND WATER TABLE ELEVATIONS.

SURVEY AND MAPPING

1. CONTRACTOR TO ENSURE EXISTING MONUMENTS ARE NOT DISTURBED DURING CONSTRUCTION. ANY MONUMENTS IN DANGER OF DISTURBANCE ARE TO BE REFERENCED AND REPLACED AT THE CONTRACTOR'S EXPENSE BY A B.C.L.S. IF DISTURBED.
2. PRE-CONSTRUCTION SURVEY BY LEVEL GEOMATICS, JUNE 9, 2025.
3. PRE-CONSTRUCTION SURVEY IS BASED ON GROUND LEVEL COORDINATES, AND GEODETIC SURVEY OF CANADA DATUM.
4. CONTRACTOR TO CONFIRM LOCATION OFF ALL UTILITIES PRIOR TO ANY CONSTRUCTION.
5. CONTRACTOR CAN REQUEST DIGITAL DRAWINGS FOR SURVEY CONTROL AND LAYOUT.

SITE 1 - DELEM DRIVE PUMP STATION

DRAWING LIST

Sheet No.	Drawing No.	Sheet Title
GENERAL/CIVIL		
1	C1	LOCATION PLAN AND GENERAL NOTES
2	C2	SITE PLAN
3	C3	SECTIONS
4	C4	WET WELL ELEVATION
5	C5	DETAILS
STRUCTURAL		
6 to 7	S1.0 to S2.0	ALL STRUCTURAL
ELECTRICAL		
8 to 33	E001 to E601	ALL ELECTRICAL
BARSKI (OWNER SUPPLIED)		
34	25-101	DELEM LIFT STATION

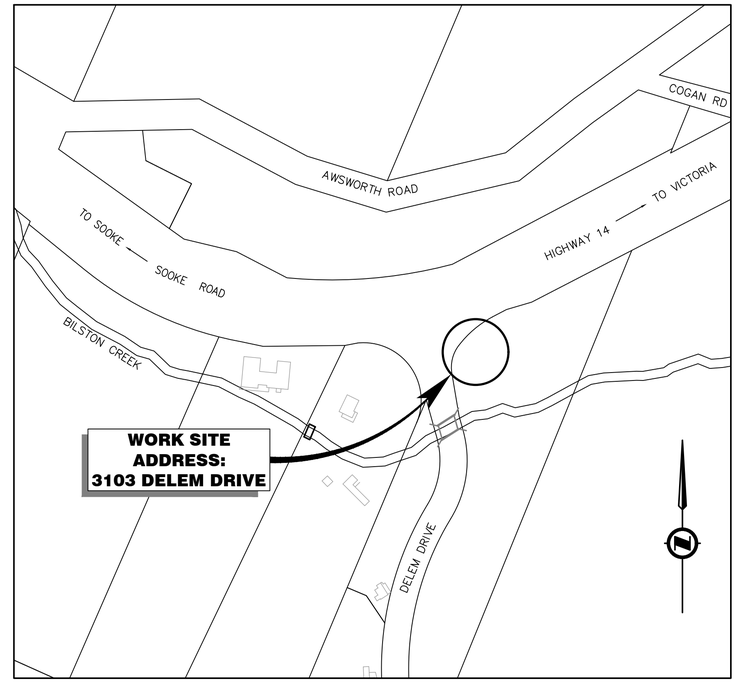

LOCATION PLAN (LANGFORD)
1:2000

LEGEND

PROPOSED	EXISTING	DESCRIPTION
		PROPERTY LINE
		EASEMENT LINE
	108	GROUND CONTOUR
		CURB AND GUTTER
		PAVED ROAD EDGE
		GRAVEL ROAD EDGE
		SANITARY SEWER & MANHOLE
		SANITARY FORCEMAIN
		STORM SEWER & MANHOLE
		CATCH BASIN
		STORM HEADWALLS & CULVERT
		WATERMAIN AND VALVE
		FIRE HYDRANT
		BC GAS MAIN & VALVE
		BC HYDRO/TEL DUCTS
		UTILITY POLE & ANCHOR
		STREETLIGHT DUCT
		STREETLIGHT
		FENCE
		TREE/VEGETATION LINE
		PATH/TRAIL
		TOP OF BANK
		TOE OF BANK

WEST SHORE ENVIRONMENTAL SERVICES LP
DELEM DRIVE SANITARY SEWAGE PUMP STATION
WSES PROJECT: 225-24

ISSUED FOR 90% REVIEW
JANUARY 9, 2026

colquitz engineering

West Shore Environmental Services
SANITARY SEWER

REV	DATE	REVISIONS	NAME

MINISTRY EGBC PERMIT TO PRACTICE 1003429

BRITISH COLUMBIA
MINISTRY OF TRANSPORTATION AND INFRASTRUCTURE
REGION_NAME
BRANCH

CAD FILENAME	CAD FILENAME	DESIGNED	LP DATE 2025-06-27
FILE NUMBER	FILE NUMBER	QUALITY CONTROL	XX DATE YYYY-MM-DD
PLOT DATE	YYYY-MM-DD	QUALITY ASSURANCE	XX DATE YYYY-MM-DD
		DRAWN	SH DATE YYYY-MM-DD

DELEM DRIVE
SEWAGE PUMP STATION
COVER

SCALE	PROJECT NUMBER	REG	DRAWING NUMBER	REV
0 0.5 1:50 2.5m	311.001	R	C1	

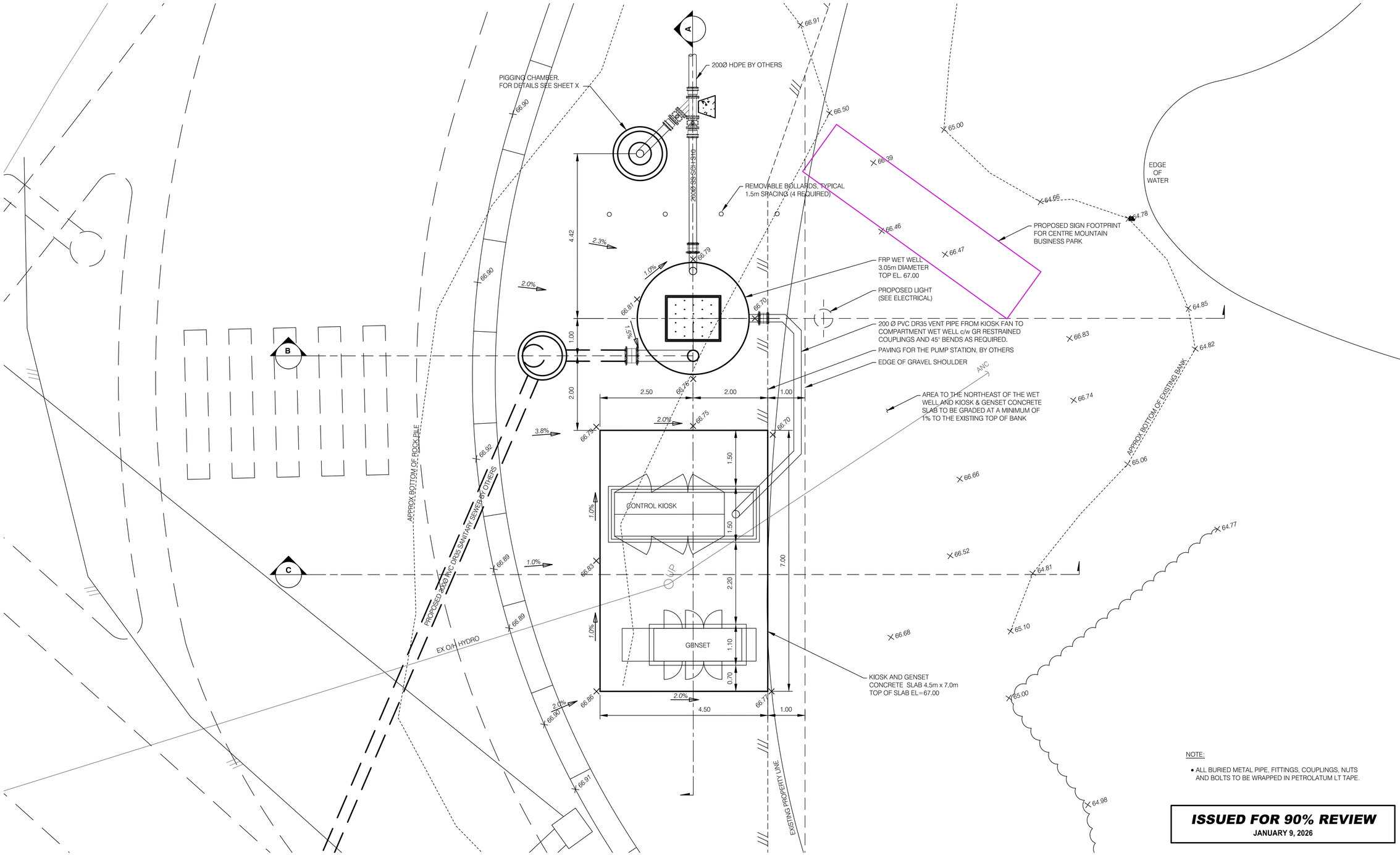

NOTE:

- ALL BURIED METAL PIPE, FITTINGS, COUPLINGS, NUTS AND BOLTS TO BE WRAPPED IN PETROLATUM LT TAPE.

ISSUED FOR 90% REVIEW
JANUARY 9, 2026

DELEM DRIVE PUMP STATION SITE PLAN

1:50

colquitz engineering

West Shore
Environmental Services
SANITARY SEWER

REV	DATE	REVISIONS	NAME

MINISTRY EGBC PERMIT TO PRACTICE 1003429

BRITISH COLUMBIA
MINISTRY OF TRANSPORTATION AND INFRASTRUCTURE
REGION_NAME
BRANCH

CAD FILENAME	CAD FILENAME	DESIGNED	LP DATE 2025-06-27
FILE NUMBER	FILE NUMBER	QUALITY CONTROL	XX DATE YYYY-MM-DD
PLOT DATE	YYYY-MM-DD	QUALITY ASSURANCE	XX DATE YYYY-MM-DD
		DRAWN	SH DATE YYYY-MM-DD

DELEM DRIVE
SEWAGE PUMP STATION
SITE PLAN

SCALE	PROJECT NUMBER	REG	DRAWING NUMBER	REV
0 0.5 1:50 2.5m	311.001	R	C2	

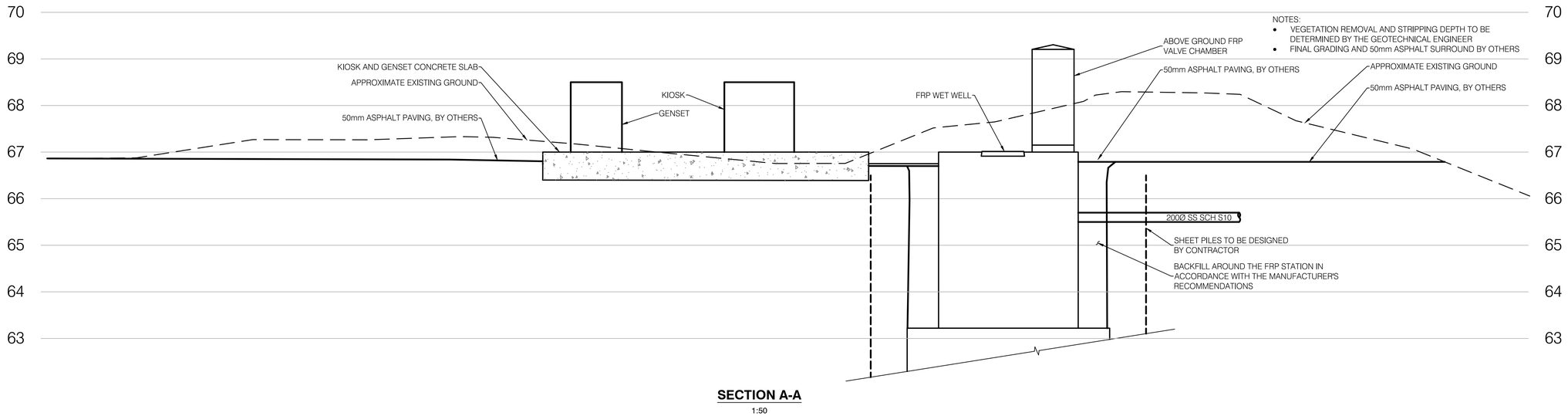

SECTION A-A
1:50

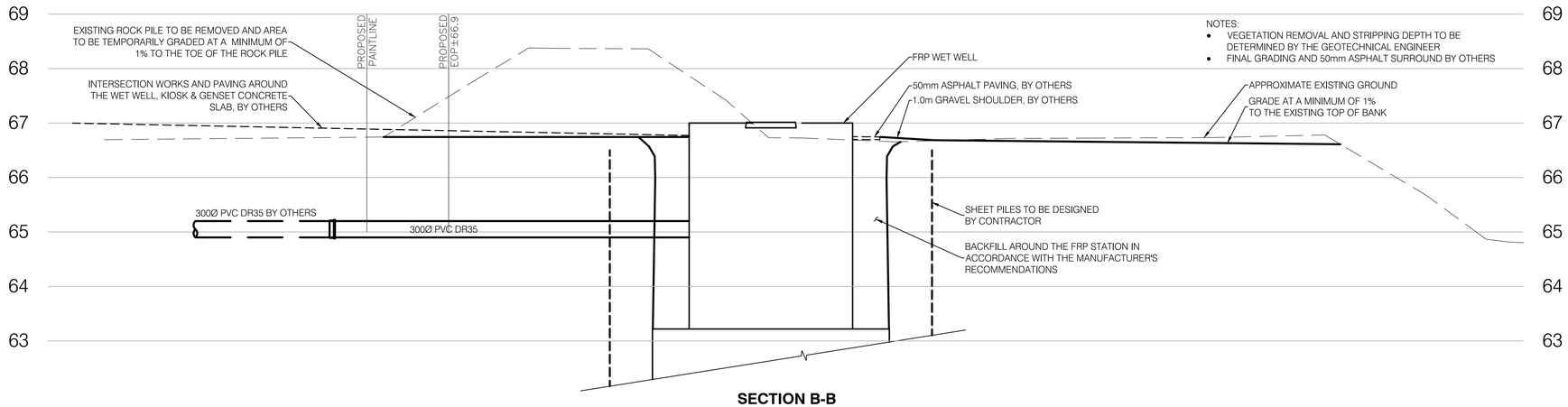

SECTION B-B
1:50

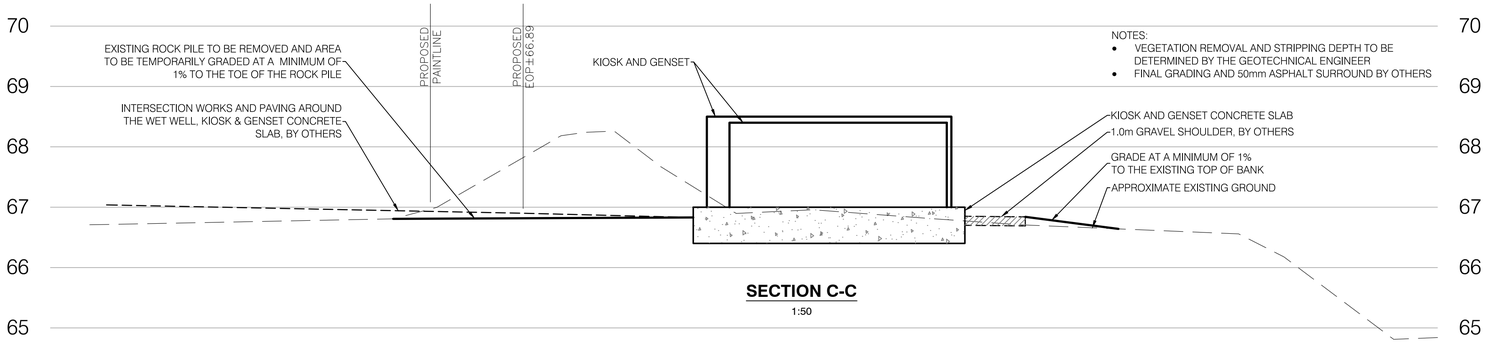

SECTION C-C
1:50

ISSUED FOR 90% REVIEW
JANUARY 9, 2026

colquitz engineering

West Shore
Environmental Services
SANITARY SEWER

REV	DATE	REVISIONS	NAME

MINISTRY EGBC PERMIT TO PRACTICE 1003429

BRITISH COLUMBIA
MINISTRY OF TRANSPORTATION AND INFRASTRUCTURE
REGION_NAME
BRANCH

CAD FILENAME CAD FILENAME
FILE NUMBER FILE NUMBER
PLOT DATE YYYY-MM-DD

DESIGNED LP DATE 2025-06-27
QUALITY CONTROL XX DATE YYYY-MM-DD
QUALITY ASSURANCE XX DATE YYYY-MM-DD
DRAWN SH DATE YYYY-MM-DD

DELEM DRIVE
SEWAGE PUMP STATION
SECTIONS

SCALE 0 0.5 1:50 2.5m

PROJECT NUMBER	REG	DRAWING NUMBER	REV
311.001	R	C3	

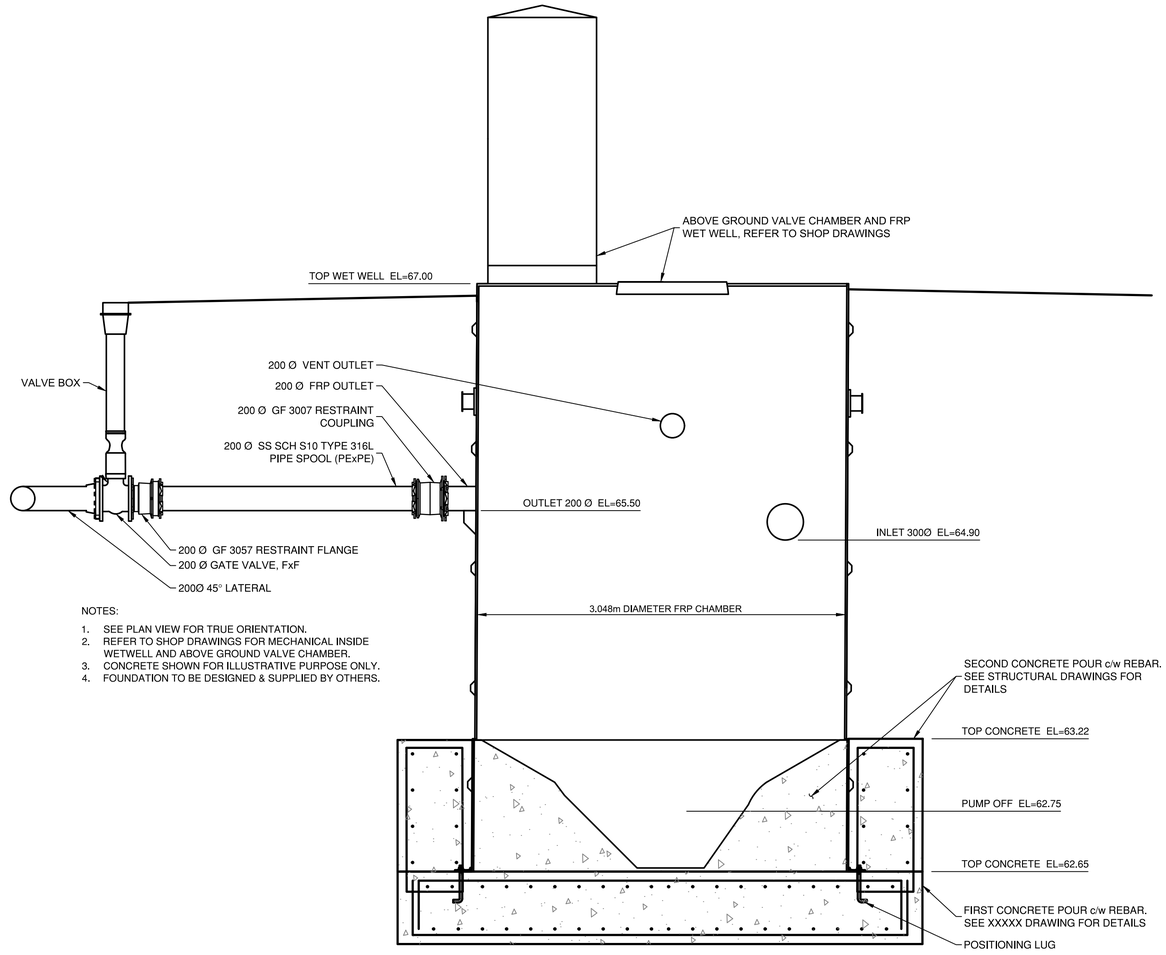

NOTES:

1. SEE PLAN VIEW FOR TRUE ORIENTATION.
2. REFER TO SHOP DRAWINGS FOR MECHANICAL INSIDE WETWELL AND ABOVE GROUND VALVE CHAMBER.
3. CONCRETE SHOWN FOR ILLUSTRATIVE PURPOSE ONLY.
4. FOUNDATION TO BE DESIGNED & SUPPLIED BY OTHERS.

WET WELL SECTION

1:25

ISSUED FOR 90% REVIEW

JANUARY 9, 2026

colquitz engineering

West Shore
Environmental Services
SANITARY SEWER

REV	DATE	REVISIONS	NAME

MINISTRY EGBC PERMIT TO PRACTICE 1003429

BRITISH COLUMBIA
MINISTRY OF TRANSPORTATION AND INFRASTRUCTURE
REGION_NAME
BRANCH

CAD FILENAME CAD FILENAME
FILE NUMBER FILE NUMBER
PLOT DATE YYYY-MM-DD

DESIGNED LP DATE 2025-06-27
QUALITY CONTROL XX DATE YYYY-MM-DD
QUALITY ASSURANCE XX DATE YYYY-MM-DD
DRAWN SH DATE YYYY-MM-DD

DELEM DRIVE
SEWAGE PUMP STATION
WET WELL

SCALE 0 250mm 1:25 1250mm

PROJECT NUMBER	REG	DRAWING NUMBER	REV
311.001	R	C5	

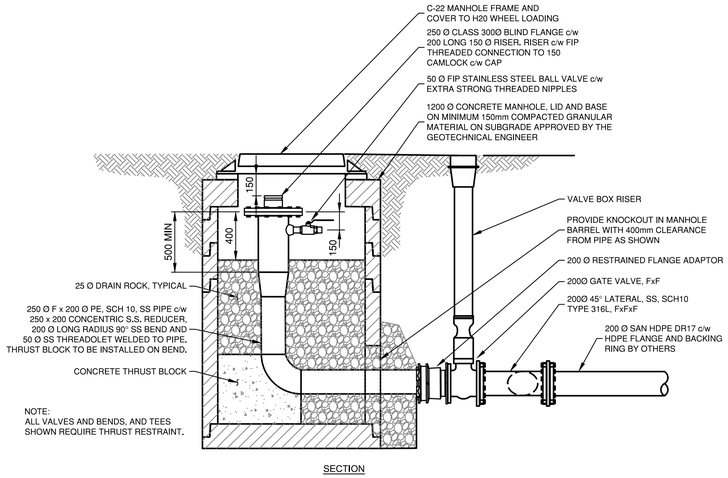

SECTION

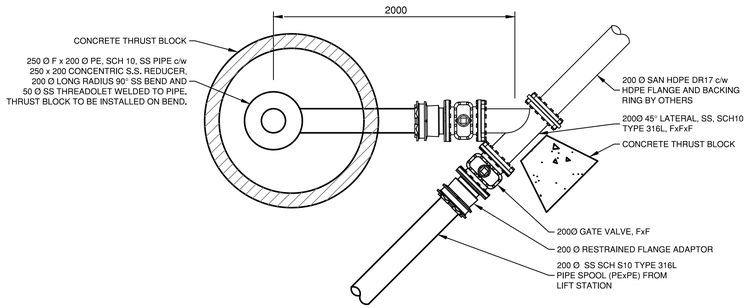

PLAN

PIGGING CHAMBER

1:25

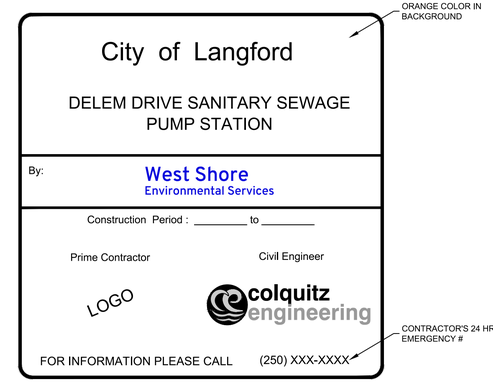

NOTES:

1. A MINIMUM OF TWO SIGNS ARE REQUIRED AND ARE TO BE SUPPLIED & INSTALLED BY THE CONTRACTOR IN LOCATIONS AS DIRECTED BY THE CITY'S REPRESENTATIVE.
2. SIGNS WILL BE 1.2m WIDE x 1.2m HIGH AND MADE OF 20mm PLYWOOD MOUNTED SECURELY ON SUPPORT POSTS.

PROJECT SIGN

NTS

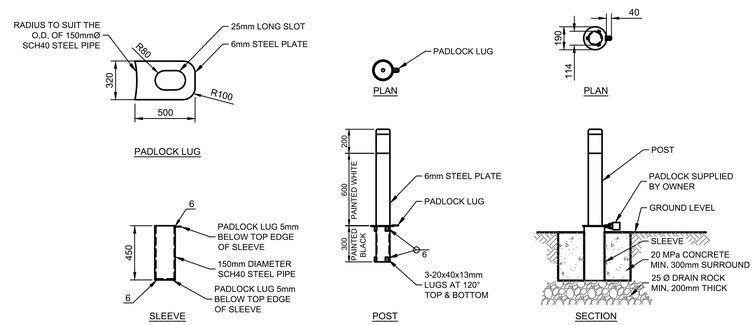

REMOVABLE BOLLARD

1:25

ISSUED FOR 90% REVIEW
JANUARY 9, 2026

colquitz engineering

West Shore
Environmental Services

SANITARY SEWER

REV	DATE	REVISIONS	NAME

MINISTRY EGBC PERMIT TO PRACTICE 1003429

BRITISH COLUMBIA
MINISTRY OF TRANSPORTATION AND INFRASTRUCTURE
REGION_NAME
BRANCH

CAD FILENAME	CAD FILENAME	DESIGNED	LP DATE 2025-06-27
FILE NUMBER	FILE NUMBER	QUALITY CONTROL	XX DATE YYYY-MM-DD
PLOT DATE	YYYY-MM-DD	QUALITY ASSURANCE	XX DATE YYYY-MM-DD
		DRAWN	SH DATE YYYY-MM-DD

DELEM DRIVE
SEWAGE PUMP STATION DETAILS

SCALE 0 250mm 1:25 1250mm

PROJECT NUMBER	REG	DRAWING NUMBER	REV
311.001	R	C5	

TECHNICAL MEMORANDUM

DATE April 2, 2026 **Reference No.** CA0051793.7685-001-TM-Rev1

TO Jeff Howard, P.Eng.
Colquitz Engineering Ltd.

CC Catherine.Laurie@nexuswg.com; gcarson@gcengineering.org; pdhillon@gcengineering.org; larryp.civil.consulting@gmail.com; michael.scopick@pbxeng.com; brett.tataryn@nexuswg.com

FROM Stewart Dolan, P.Eng. **EMAIL stewart.dolan@wsp.com**

P-Y Curves and Displacement Profile for Delem Drive Pump Station Pile Design

1 INTRODUCTION

WSP Canada Inc. (WSP) provides this revised technical memorandum to update the pile design parameters based on the changes to the site layout. This memo provides lateral displacement pile p-y curves to support structural design of the piles.

2 SUMMARY OF DESIGN CHANGES

The design has undergone several iterations since WSP issued the Rev0 version of this memo, reference CA0051793.7685-001-TM-Rev0 dated 26 June 2025. The following drawings were reviewed for completing the work documented in this memo:

- Colquitz Engineering drawing set '*Delem Drive Sewage Pump Station'* (WSES Project: 225-24), Issued for 90% Review, dated 06 January 2026, Sheets C1 to C5.
- GC Engineering drawing set '*Delem Drive Pump Station'*, Revision 1, dated 14 August 2025, Sheets S1 to S3.

These drawings have been included in Appendix E for reference.

WSP has reviewed the revised location shown on the drawings and updated the recommendations in this Rev1 memo to accommodate these changes. We also understand that only the wet well will be pile supported and the genset and kiosk will be founded on a slab on grade.

Drawing S1 shows the base of the wet comprises a 600mm thick reinforced concrete slab supported by six piles. Drawing S2 shows the piles comprise a 12.7mm thick 610mm diameter steel pipe pile with a closed end.

3 LATERAL DISPLACEMENT

Free field seismic induced ground displacements were estimated using the methods by Bray and Travasarou (2007) and Macedo, Bray, and Travasarou (2019). The yield acceleration, k_y, was calculated using commercial software Slope/W.

Two profiles were developed based on the sections presented on civil drawing Sheet C3:

- Section B-B through the wet well
- Section C-C through the genset and kiosk.

The ground models used for the analysis and the calculation of k_y are included in Appendix A. From these results, WSP estimated the following seismic slope displacements by probability of exceedance.

Table 1: Estimated Lateral Displacements by Probability

	16th Percentile	Median Value	84th Percentile
Crustal Earthquake	5 cm	11 cm	22 cm
Subduction Earthquake	10 cm	21 cm	42 cm

The maximum median value can typically be used for design i.e., 21 cm. However, depending on the Owner's risk tolerance, the higher or lower values could be used.

Two lateral displacement profiles are included in Appendix B:

- Horizontal displacement profile starting from finished ground level; and
- Horizontal displacement profile starting from the top of the wet well pile at EL.61.5.

4 LATERAL PILE P-Y CURVES

Commercial software LPILE was used to develop nonlinear p-y soil springs that can be used in the structural analysis. The p-y curves were developed for a round pile with an outside diameter of 610mm. The ground model used is presented in Table 2.

Table 2: Ground Model to Develop p-y Curves

Soil Layer	Depth Below Pile Head to Top of Layer (m)	Elevation (m)	Soil Model	Unit Weight [Buoyant Unit Weight] (kN/m^3)	Undrained Shear Strength, C_U (kPa)	Residual Shear Strength, S_r (kPa)	Friction Angle, φ' (°)	Unconfined Compressive Strength, UCS (MPa)
Peat	0	61.5	Soft Clay (Matlock)	14 [4]	50	20		
Soft Clay	1.6	59.9	Soft Clay (Matlock)	16 [6]	40	17		
Sandy Silt	15.9	45.6	API Sand	18 [8]8	-	-	30	
Till	19.3	42.2	API Sand	22 [12]	-	-	38	
Bedrock	20	41.5	Strong Rock		-	-		80

The p-y curves were generated at 1m depth intervals starting from the pile head at EL.61.5m. Static p-y curves are included in Appendix C and seismic p-y curves are included in Appendix D.

WSP also conducted sensitivity analysis on the effect of rock sockets on lateral pile resistance. The analysis indicates that due to the depth of bedrock, there is no significant benefit of socketing piles into the bedrock. Therefore, WSP considers piles driven to refusal on bedrock will provide sufficient lateral resistance and drilling rock sockets is not required for lateral resistance.

5 DISCUSSION ON GEOTECHNICAL ANALYSIS AND RESULTS

Please note the following comments with regards to the p-y curves and deflection profile presented in this memo:

1) The displacement analysis was conducted using the empirical methods which estimates seismic-induced free-field displacements based on the yield acceleration and site-specific ground motion parameters.

2) The analysis was conducted for a single pile; group effects were not considered.

3) The displacement value presented represents the estimated permanent horizontal displacement at the slope crest near the pump station components. Dynamic interaction or differential movement between adjacent structures during ground shaking was not evaluated, as this was beyond the scope of the current analysis.

We understand that the wet well and valve chamber are to be supported on piles and located approximately 4.5 meters below the ground surface. As such, passive soil pressure on the side of the wet well should be considered in the design, and an advanced pile-soil interaction analysis would be required to assess the pile deflection profile in greater detail. This analysis is not currently within our scope of work.

In contrast, the generator (genset) and kiosk are proposed to be supported on shallow foundations. The estimated horizontal displacement which is in the order of 21cm should be considered as the potential differential movement between the piled and shallow foundation elements. If the design can accommodate this differential displacement, no additional analysis is necessary. However, if it cannot be tolerated, then either a more detailed analysis should be performed, or a consistent foundation system should be adopted across all elements (i.e., both elements pile supported).

With regards to the pile design, if the single pile analysis cannot be made to work, then additional and/or more rigorous geotechnical analysis could be considered. The structural analysis may benefit from considering the piles as a frame, with reduced displacement profile on the piles farther from the crest. Grouping effects and soil-structure interaction could also be considered.

Dynamic analysis could also be considered; however, as previously discussed, selection and scaling earthquake time-histories takes considerable time and effort. We can discuss this with you following the issue of this memo and the subsequent structural analysis, if requested.

6 CLOSURE

We trust this technical memo meets your needs at this time. If you have any questions on the information presented above, please do not hesitate to contact the undersigned.

WSP Canada Inc.

Prepared by:

Reviewed by:

WSP Canada Inc.
Engineers & Geoscientists BC
Permit #1000200

Stewart Dolan, P.Eng.
Lead Geotechnical Engineer

Don Kaluza, P.Eng.
Senior Principal Engineer

SD/DK/asd

Attachments: Appendix A – Slope/W Models and k_y Results
Appendix B – Horizontal Displacement Profiles
Appendix C – Wet well pile p-y curves (Static Case)
Appendix D – Wet well pile p-y curves (Seismic Case)
Appendix E – Civil and Structural Drawings (C1 to C5 and S1 to S3)

https://wsponlinecan.sharepoint.com/sites/ca-ca0051793.7685/shared documents/06. deliverables/3.0_issued/ca0051793.7685-001-tm-rev1/ca0051793.7685-001-tm-rev1-pile design parameters-02apr_26.docx

IMPORTANT INFORMATION AND LIMITATIONS OF THIS REPORT

Standard of Care: WSP Canada Inc. (WSP) has prepared this report in a manner consistent with that level of care and skill ordinarily exercised by members of the engineering and science professions currently practising under similar conditions in the jurisdiction in which the services are provided, subject to the time limits and physical constraints applicable to this report. No other warranty, expressed or implied is made.

Basis and Use of the Report: This report has been prepared for the specific site, design objective, development and purpose described to WSP by the Client. The factual data, interpretations and recommendations pertain to a specific project as described in this report and are not applicable to any other project or site location. Any change of site conditions, purpose, development plans or if the project is not initiated within eighteen months of the date of the report may alter the validity of the report. WSP can not be responsible for use of this report, or portions thereof, unless WSP is requested to review and, if necessary, revise the report.

The information, recommendations and opinions expressed in this report are for the sole benefit of the Client. No other party may use or rely on this report or any portion thereof without WSP's express written consent. If the report was prepared to be included for a specific permit application process, then upon the reasonable request of the client, WSP may authorize in writing the use of this report by the regulatory agency as an Approved User for the specific and identified purpose of the applicable permit review process. Any other use of this report by others is prohibited and is without responsibility to WSP. The report, all plans, data, drawings and other documents as well as all electronic media prepared by WSP are considered its professional work product and shall remain the copyright property of WSP, who authorizes only the Client and Approved Users to make copies of the report, but only in such quantities as are reasonably necessary for the use of the report by those parties. The Client and Approved Users may not give, lend, sell, or otherwise make available the report or any portion thereof to any other party without the express written permission of WSP. The Client acknowledges that electronic media is susceptible to unauthorized modification, deterioration and incompatibility and therefore the Client cannot rely upon the electronic media versions of WSP's report or other work products.

The report is of a summary nature and is not intended to stand alone without reference to the instructions given to WSP by the Client, communications between WSP and the Client, and to any other reports prepared by WSP for the Client relative to the specific site described in the report. In order to properly understand the suggestions, recommendations and opinions expressed in this report, reference must be made to the whole of the report. WSP can not be responsible for use of portions of the report without reference to the entire report.

Unless otherwise stated, the suggestions, recommendations and opinions given in this report are intended only for the guidance of the Client in the design of the specific project. The extent and detail of investigations, including the number of test holes, necessary to determine all of the relevant conditions which may affect construction costs would normally be greater than has been carried out for design purposes. Contractors bidding on, or undertaking the work, should rely on their own investigations, as well as their own interpretations of the factual data presented in the report, as to how subsurface conditions may affect their work, including but not limited to proposed construction techniques, schedule, safety and equipment capabilities.

Soil, Rock and Groundwater Conditions: Classification and identification of soils, rocks, and geologic units have been based on commonly accepted methods employed in the practice of geotechnical engineering and related disciplines. Classification and identification of the type and condition of these materials or units involves judgment, and boundaries between different soil, rock or geologic types or units may be transitional rather than abrupt. Accordingly, WSP does not warrant or guarantee the exactness of the descriptions.

Special risks occur whenever engineering or related disciplines are applied to identify subsurface conditions and even a comprehensive investigation, sampling and testing program may fail to detect all or certain subsurface conditions. The environmental, geologic, geotechnical, geochemical and hydrogeologic conditions

that WSP interprets to exist between and beyond sampling points may differ from those that actually exist. In addition to soil variability, fill of variable physical and chemical composition can be present over portions of the site or on adjacent properties. **The professional services retained for this project include only the geotechnical aspects of the subsurface conditions at the site, unless otherwise specifically stated and identified in the report.** The presence or implication(s) of possible surface and/or subsurface contamination resulting from previous activities or uses of the site and/or resulting from the introduction onto the site of materials from off-site sources are outside the terms of reference for this project and have not been investigated or addressed.

Soil and groundwater conditions shown in the factual data and described in the report are the observed conditions at the time of their determination or measurement. Unless otherwise noted, those conditions form the basis of the recommendations in the report. Groundwater conditions may vary between and beyond reported locations and can be affected by annual, seasonal and meteorological conditions. The condition of the soil, rock and groundwater may be significantly altered by construction activities (traffic, excavation, groundwater level lowering, pile driving, blasting, etc.) on the site or on adjacent sites. Excavation may expose the soils to changes due to wetting, drying or frost. Unless otherwise indicated the soil must be protected from these changes during construction.

Sample Disposal: WSP will dispose of all uncontaminated soil and/or rock samples 90 days following issue of this report or, upon written request of the Client, will store uncontaminated samples and materials at the Client's expense. In the event that actual contaminated soils, fills or groundwater are encountered or are inferred to be present, all contaminated samples shall remain the property and responsibility of the Client for proper disposal.

Follow-Up and Construction Services: All details of the design were not known at the time of submission of WSP's report. WSP should be retained to review the final design, project plans and documents prior to construction, to confirm that they are consistent with the intent of WSP's report.

During construction, WSP should be retained to perform sufficient and timely observations of encountered conditions to confirm and document that the subsurface conditions do not materially differ from those interpreted conditions considered in the preparation of WSP's report and to confirm and document that construction activities do not adversely affect the suggestions, recommendations and opinions contained in WSP's report. Adequate field review, observation and testing during construction are necessary for WSP to be able to provide letters of assurance, in accordance with the requirements of many regulatory authorities. In cases where this recommendation is not followed, WSP's responsibility is limited to interpreting accurately the information encountered at the borehole locations, at the time of their initial determination or measurement during the preparation of the Report.

Changed Conditions and Drainage: Where conditions encountered at the site differ significantly from those anticipated in this report, either due to natural variability of subsurface conditions or construction activities, it is a condition of this report that WSP be notified of any changes and be provided with an opportunity to review or revise the recommendations within this report. Recognition of changed soil and rock conditions requires experience and it is recommended that WSP be employed to visit the site with sufficient frequency to detect if conditions have changed significantly.

Drainage of subsurface water is commonly required either for temporary or permanent installations for the project. Improper design or construction of drainage or dewatering can have serious consequences. WSP takes no responsibility for the effects of drainage unless specifically involved in the detailed design and construction monitoring of the system.

APPENDIX A

Slope/W Models and k_y Results

Color	Name	Slope Stability Material Model	Unit Weight (kN/m³)	Effective Cohesion (kPa)	Effective Friction Angle (°)	Phi-B (°)	Piezometric Surface
	Bedrock	Bedrock (Impenetrable)					1
	Cematrix	Mohr-Coulomb	4.75	30	34	0	1
	New Rock Fill	Mohr-Coulomb	22	0	40	0	1
	Peat	Mohr-Coulomb	14	25	0	0	1
	Rock fill	Mohr-Coulomb	21	0	40	0	1
	Sandy Silt	Mohr-Coulomb	18	0	30	0	1
	Soft Clay	Mohr-Coulomb	16	40	0	0	1
	Till	Mohr-Coulomb	22	10	38	0	1

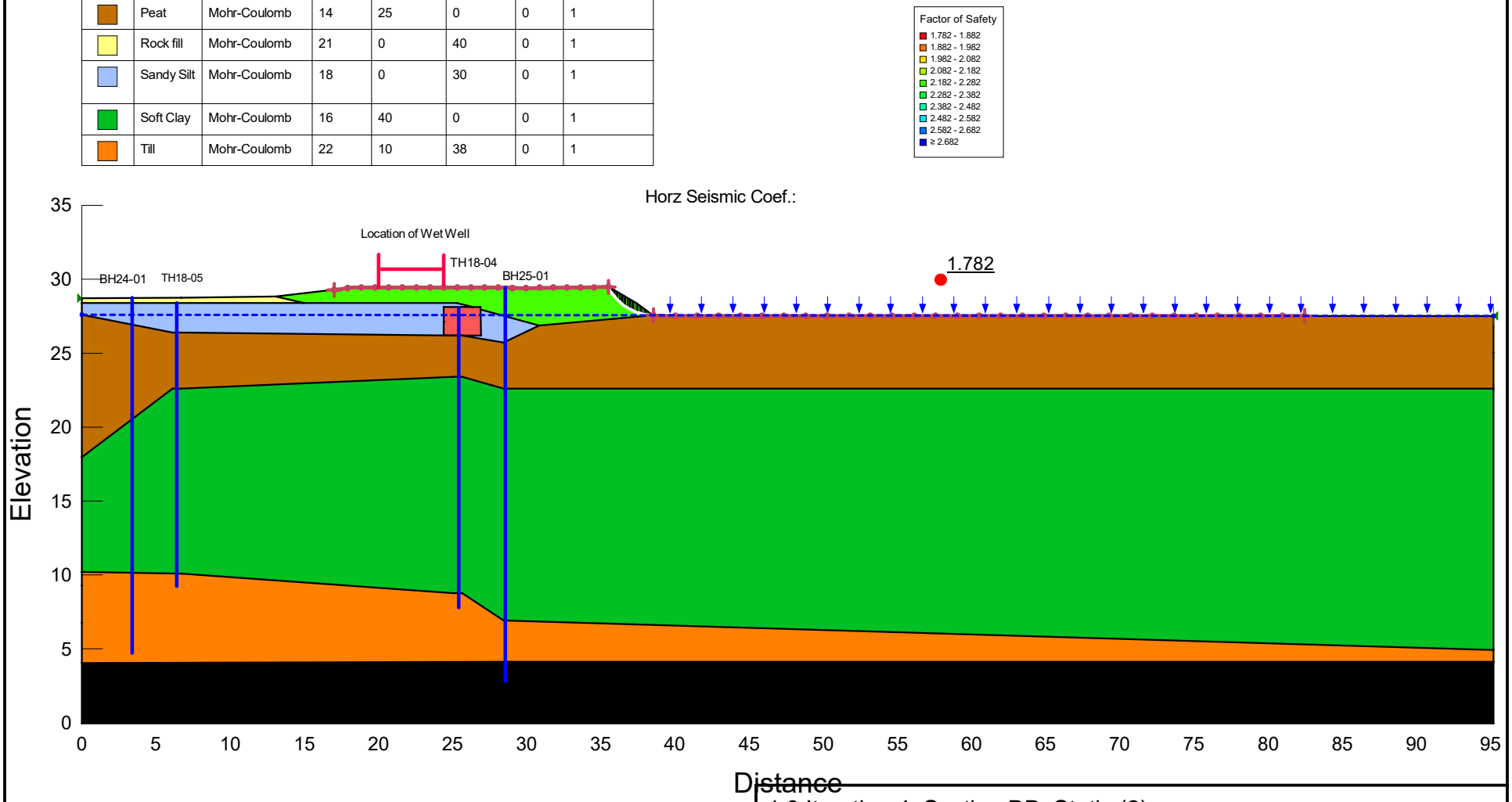

1.0 Iteration 4_Section BB_Static (2)

Delem Drive_Iteration 4_2026-02-13.gsz

02/18/2026 1:399.57204

Color	Name	Slope Stability Material Model	Unit Weight (kN/m³)	Effective Cohesion (kPa)	Effective Friction Angle (°)	Phi-B (°)	Piezometric Surface
	Bedrock	Bedrock (Impenetrable)					1
	Cematrix	Mohr-Coulomb	4.75	30	34	0	1
	New Rock Fill	Mohr-Coulomb	22	0	40	0	1
	Peat	Mohr-Coulomb	14	25	0	0	1
	Rock fill	Mohr-Coulomb	21	0	40	0	1
	Sandy Silt	Mohr-Coulomb	18	0	30	0	1
	Soft Clay	Mohr-Coulomb	16	40	0	0	1
	Till	Mohr-Coulomb	22	10	38	0	1

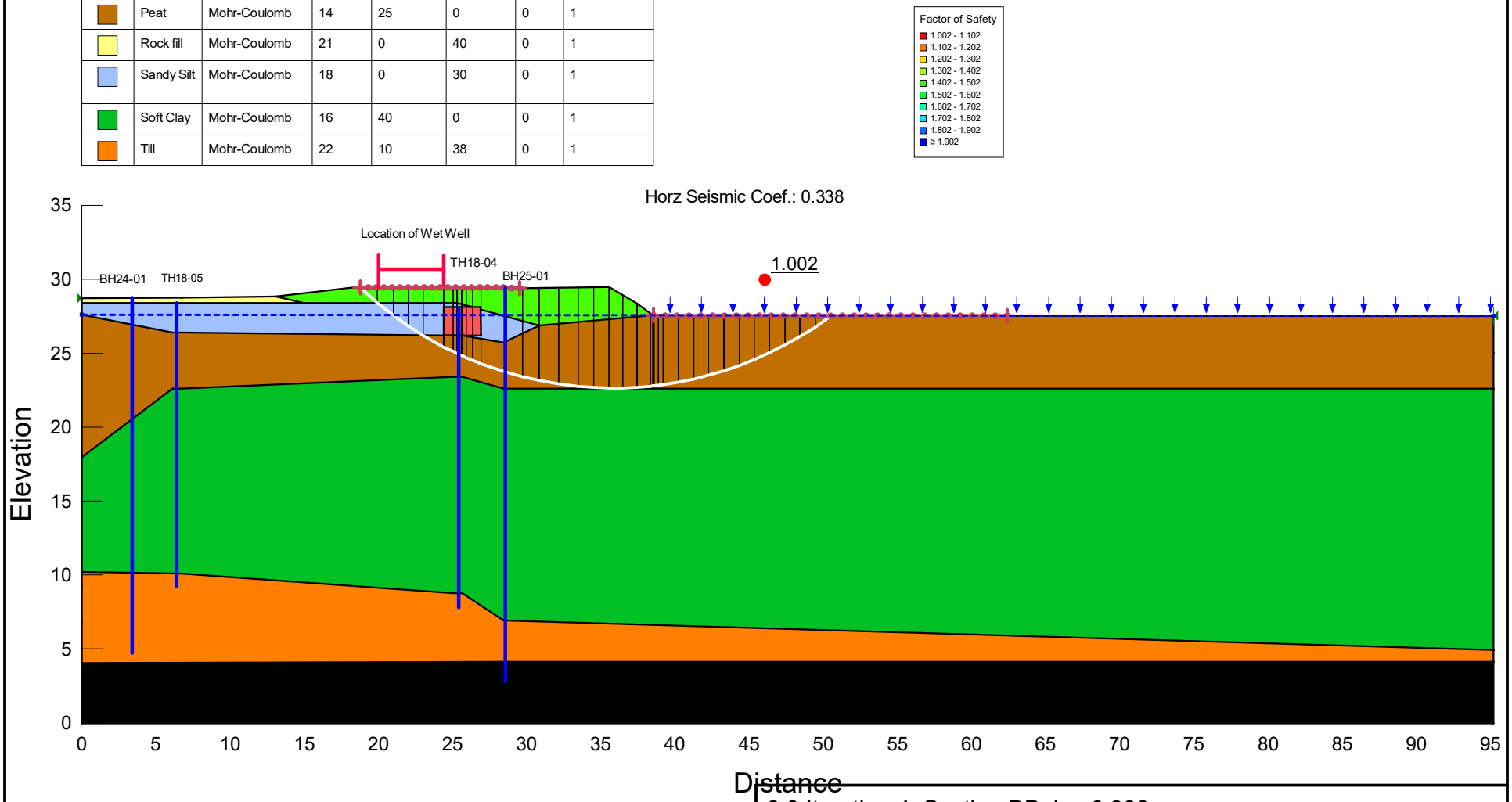

3.0 Iteration 4_Section BB_ky=0.338

Delem Drive_Iteration 4_2026-02-13.gsz

02/18/2026 1:399.57204

Color	Name	Slope Stability Material Model	Unit Weight (kN/m³)	Effective Cohesion (kPa)	Effective Friction Angle (°)	Phi-B (°)	Piezometric Surface
	Bedrock	Bedrock (Impenetrable)					1
	New Rock Fill	Mohr-Coulomb	22	0	40	0	1
	Peat	Mohr-Coulomb	14	25	0	0	1
	Rock fill	Mohr-Coulomb	21	0	40	0	1
	Sandy Silt	Mohr-Coulomb	18	0	30	0	1
	Soft Clay	Mohr-Coulomb	16	40	0	0	1
	Till	Mohr-Coulomb	22	10	38	0	1

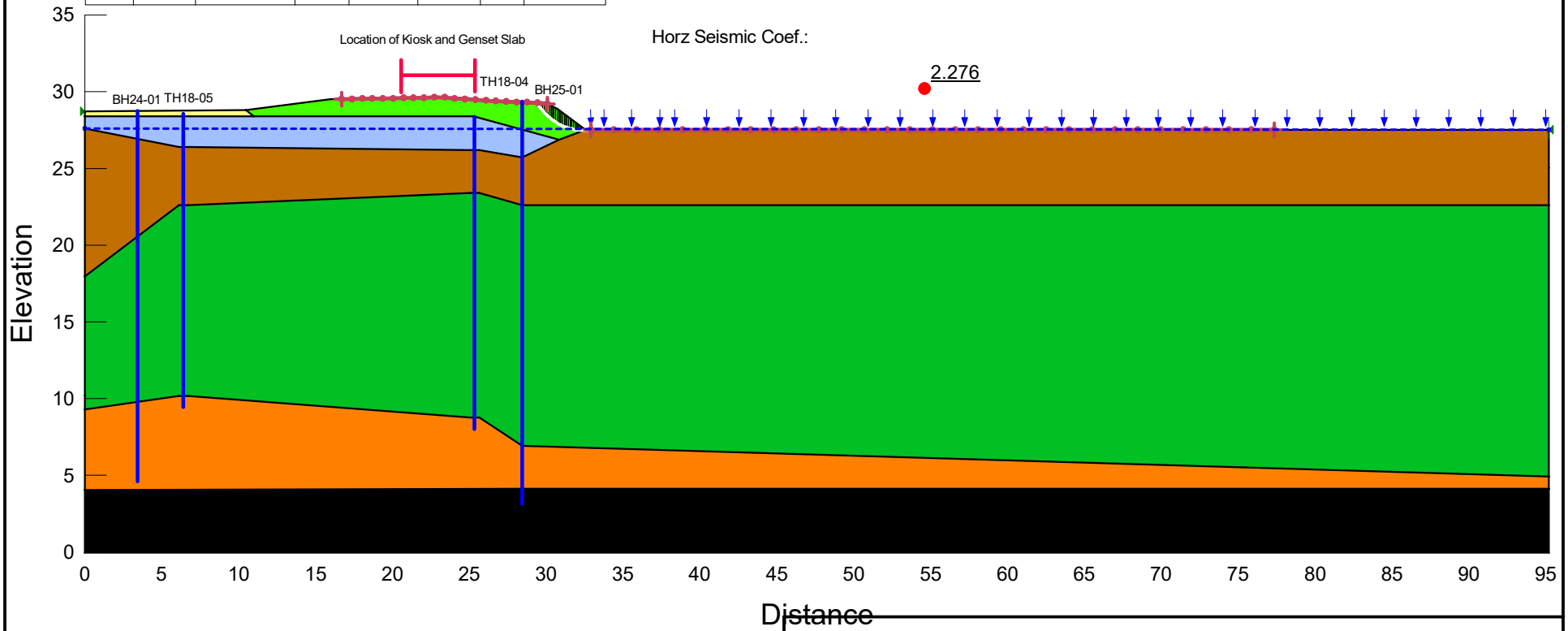

1.0 Iteration 4_Section CC_static

Delem Drive_Iteration 4_2026-02-13.gsz

02/18/2026 1:399

Color	Name	Slope Stability Material Model	Unit Weight (kN/m³)	Effective Cohesion (kPa)	Effective Friction Angle (°)	Phi-B (°)	Piezometric Surface
	Bedrock	Bedrock (Impenetrable)					1
	New Rock Fill	Mohr-Coulomb	22	0	40	0	1
	Peat	Mohr-Coulomb	14	25	0	0	1
	Rock fill	Mohr-Coulomb	21	0	40	0	1
	Sandy Silt	Mohr-Coulomb	18	0	30	0	1
	Soft Clay	Mohr-Coulomb	16	40	0	0	1
	Till	Mohr-Coulomb	22	10	38	0	1

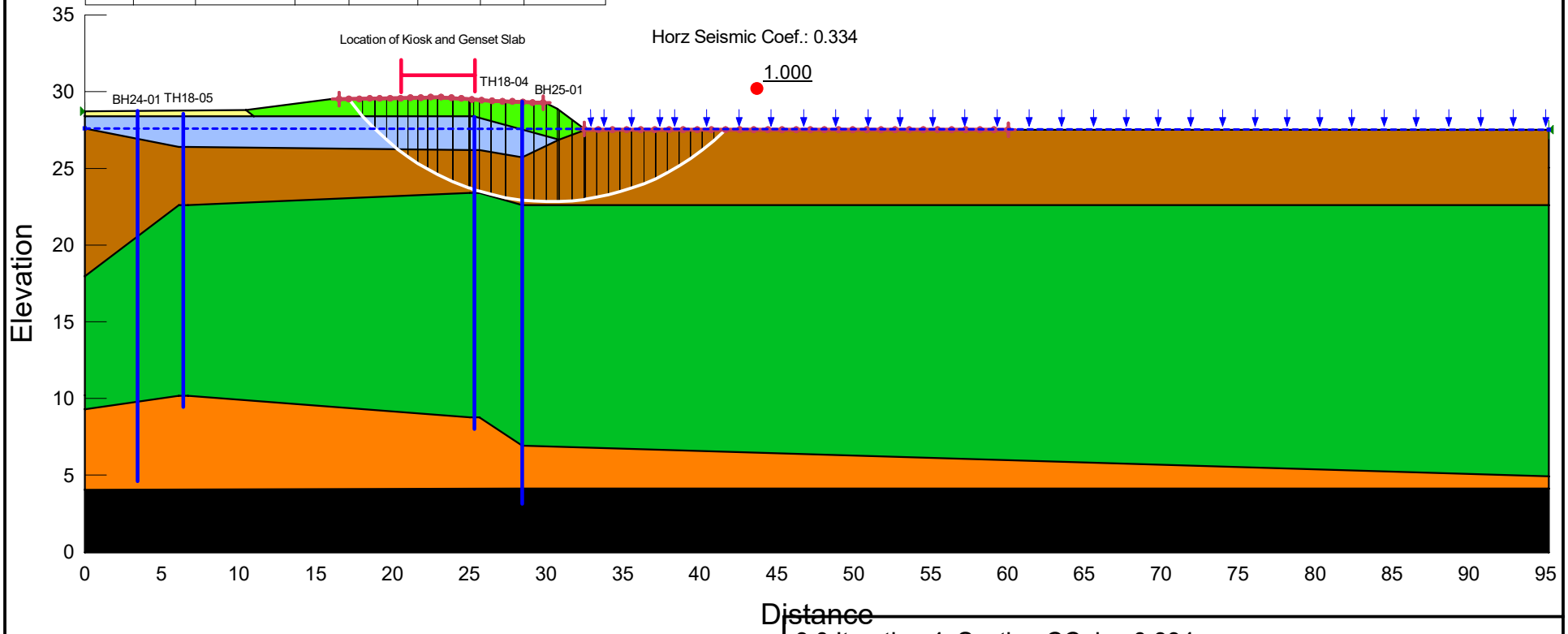

3.0 Iteration 4_Section CC_ky=0.334

Delem Drive_Iteration 4_2026-02-13.gsz

02/18/2026 1:399

APPENDIX B

Horizontal Displacement Profiles

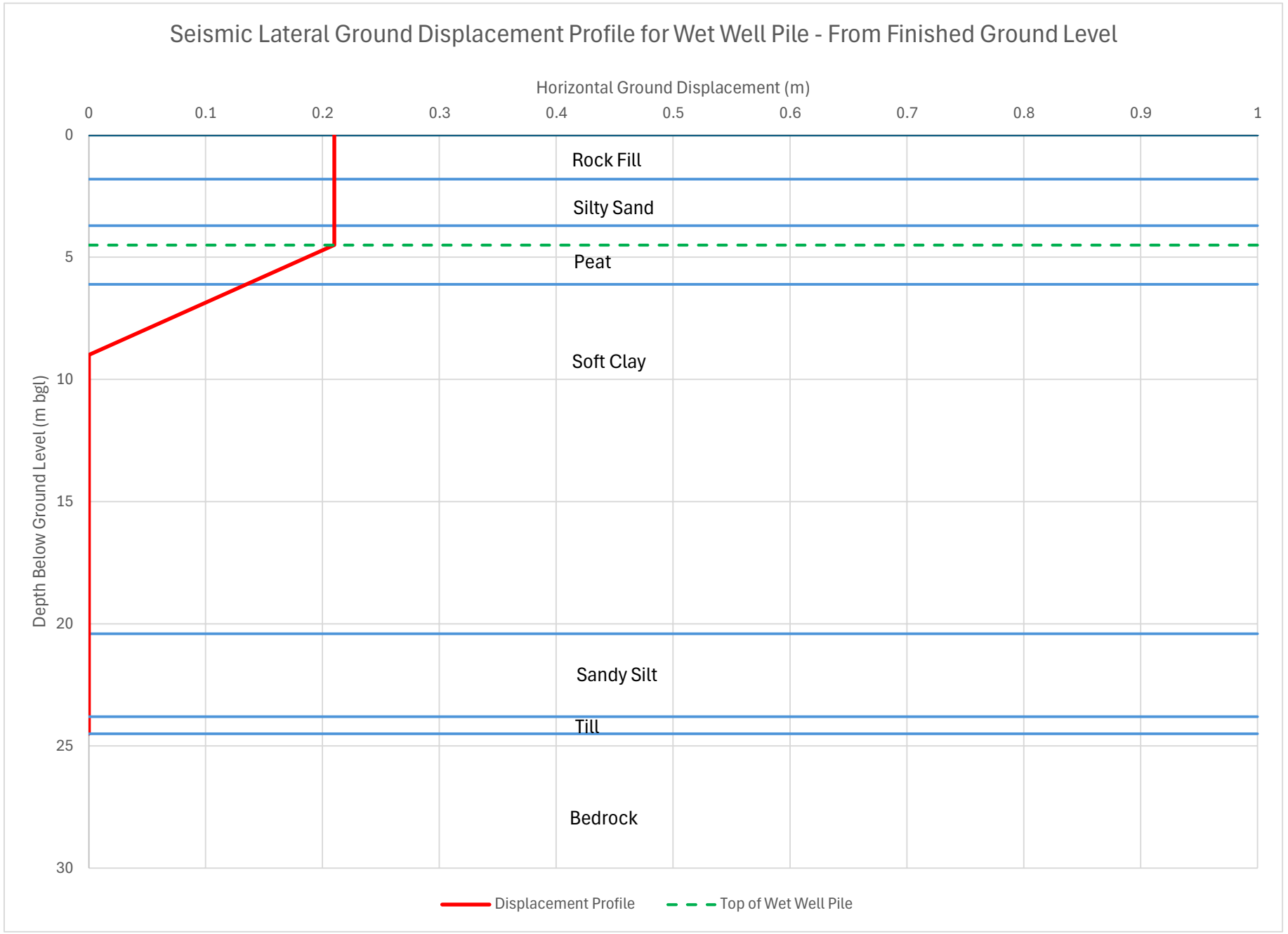
Seismic Lateral Ground Displacement Profile for Wet Well Pile - From Finished Ground Level
Horizontal Ground Displacement (m)
0
0.1
0.2
0.3
0.4
0.5
0.6
0.7
0.8
0.9
1
Depth Below Ground Level (m bgl)
0
5
10
15
20
25
30
Rock Fill
Silty Sand
Peat
Soft Clay
Sandy Silt
Till
Bedrock
Displacement Profile
Top of Wet Well Pile

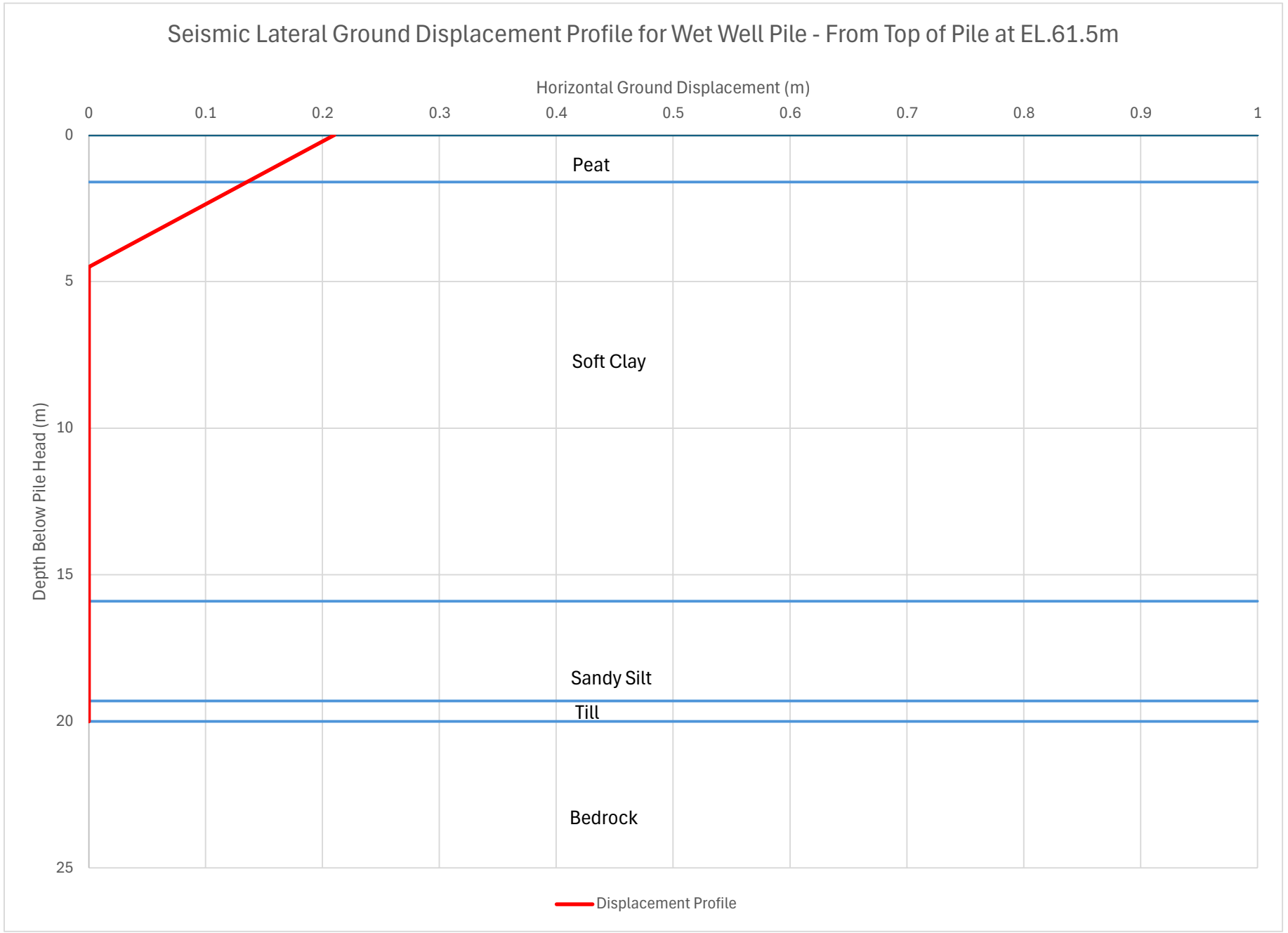
Seismic Lateral Ground Displacement Profile for Wet Well Pile - From Top of Pile at EL.61.5m
Horizontal Ground Displacement (m)
0
0.1
0.2
0.3
0.4
0.5
0.6
0.7
0.8
0.9
1
Depth Below Pile Head (m)
0
5
10
15
20
25
Peat
Soft Clay
Sandy Silt
Till
Bedrock
Displacement Profile

APPENDIX C

Wet Well Pile p-y Curves (Static Case)

p-y Curves **Static Case - Wet Well Piles** Legend!A1

X	y (m)
Y	p (kN/m)

Depth below Pile Head = 1.00 m		Depth below Pile Head = 2.00 m		Depth below Pile Head = 3.00 m		Depth below Pile Head = 4.00 m		Depth below Pile Head = 5.00 m		Depth below Pile Head = 6.00 m		Depth below Pile Head = 7.00 m	
X	Y	X	Y	X	Y	X	Y	X	Y	X	Y	X	Y
0	0	0	0	0	0	0	0	0	0	0	0	0	0
7.22963E-05	7.9293333	7.22963E-05	7.9045333	7.22963E-05	9.4818667	7.22963E-05	11.0592	7.22963E-05	12.636533	7.22963E-05	14.213867	7.22963E-05	14.64
0.00057837	15.858667	0.00057837	15.809067	0.00057837	18.963733	0.00057837	22.1184	0.00057837	25.273067	0.00057837	28.427733	0.00057837	29.28
0.001952	23.788	0.001952	23.7136	0.001952	28.4456	0.001952	33.1776	0.001952	37.9096	0.001952	42.6416	0.001952	43.92
0.004626963	31.717333	0.004626963	31.618133	0.004626963	37.927467	0.004626963	44.2368	0.004626963	50.546133	0.004626963	56.855467	0.004626963	58.56
0.009037037	39.646667	0.009037037	39.522667	0.009037037	47.409333	0.009037037	55.296	0.009037037	63.182667	0.009037037	71.069333	0.009037037	73.2
0.015616	47.576	0.015616	47.4272	0.015616	56.8912	0.015616	66.3552	0.015616	75.8192	0.015616	85.2832	0.015616	87.84
0.02479763	55.505333	0.02479763	55.331733	0.02479763	66.373067	0.02479763	77.4144	0.02479763	88.455733	0.02479763	99.497067	0.02479763	102.48
0.037015704	63.434667	0.037015704	63.236267	0.037015704	75.854933	0.037015704	88.4736	0.037015704	101.09227	0.037015704	113.71093	0.037015704	117.12
0.052704	71.364	0.052704	71.1408	0.052704	85.3368	0.052704	99.5328	0.052704	113.7288	0.052704	127.9248	0.052704	131.76
0.072296296	79.293333	0.072296296	79.045333	0.072296296	94.818667	0.072296296	110.592	0.072296296	126.36533	0.072296296	142.13867	0.072296296	146.4
0.09622637	87.222667	0.09622637	86.949867	0.09622637	104.30053	0.09622637	121.6512	0.09622637	139.00187	0.09622637	156.35253	0.09622637	161.04
0.124928	95.152	0.124928	94.8544	0.124928	113.7824	0.124928	132.7104	0.124928	151.6384	0.124928	170.5664	0.124928	175.68
0.15883496	103.08133	0.15883496	102.75893	0.15883496	123.26427	0.15883496	143.7696	0.15883496	164.27493	0.15883496	184.78027	0.15883496	190.32
0.19838104	111.01067	0.19838104	110.66347	0.19838104	132.74613	0.19838104	154.8288	0.19838104	176.91147	0.19838104	198.99413	0.19838104	204.96
0.244	118.94	0.244	118.568	0.244	142.228	0.244	165.888	0.244	189.548	0.244	213.208	0.244	219.6
0.25925	118.94	0.25925	118.568	0.25925	142.228	0.25925	165.888	0.25925	189.548	0.25925	213.208	0.25925	219.6

Depth below Pile Head = 8.00 m		Depth below Pile Head = 9.00 m		Depth below Pile Head = 10.00 m		Depth below Pile Head = 11.00 m		Depth below Pile Head = 12.00 m		Depth below Pile Head = 13.00 m		Depth below Pile Head = 14.00 m	
X	Y	X	Y	X	Y	X	Y	X	Y	X	Y	X	Y
0	0	0	0	0	0	0	0	0	0	0	0	0	0
7.22963E-05	14.64	7.22963E-05	14.64	7.22963E-05	14.64	7.22963E-05	14.64	7.22963E-05	14.64	7.22963E-05	14.64	7.22963E-05	14.64
0.00057837	29.28	0.00057837	29.28	0.00057837	29.28	0.00057837	29.28	0.00057837	29.28	0.00057837	29.28	0.00057837	29.28
0.001952	43.92	0.001952	43.92	0.001952	43.92	0.001952	43.92	0.001952	43.92	0.001952	43.92	0.001952	43.92
0.004626963	58.56	0.004626963	58.56	0.004626963	58.56	0.004626963	58.56	0.004626963	58.56	0.004626963	58.56	0.004626963	58.56
0.009037037	73.2	0.009037037	73.2	0.009037037	73.2	0.009037037	73.2	0.009037037	73.2	0.009037037	73.2	0.009037037	73.2
0.015616	87.84	0.015616	87.84	0.015616	87.84	0.015616	87.84	0.015616	87.84	0.015616	87.84	0.015616	87.84
0.02479763	102.48	0.02479763	102.48	0.02479763	102.48	0.02479763	102.48	0.02479763	102.48	0.02479763	102.48	0.02479763	102.48
0.037015704	117.12	0.037015704	117.12	0.037015704	117.12	0.037015704	117.12	0.037015704	117.12	0.037015704	117.12	0.037015704	117.12
0.052704	131.76	0.052704	131.76	0.052704	131.76	0.052704	131.76	0.052704	131.76	0.052704	131.76	0.052704	131.76
0.072296296	146.4	0.072296296	146.4	0.072296296	146.4	0.072296296	146.4	0.072296296	146.4	0.072296296	146.4	0.072296296	146.4
0.09622637	161.04	0.09622637	161.04	0.09622637	161.04	0.09622637	161.04	0.09622637	161.04	0.09622637	161.04	0.09622637	161.04
0.124928	175.68	0.124928	175.68	0.124928	175.68	0.124928	175.68	0.124928	175.68	0.124928	175.68	0.124928	175.68
0.15883496	190.32	0.15883496	190.32	0.15883496	190.32	0.15883496	190.32	0.15883496	190.32	0.15883496	190.32	0.15883496	190.32
0.19838104	204.96	0.19838104	204.96	0.19838104	204.96	0.19838104	204.96	0.19838104	204.96	0.19838104	204.96	0.19838104	204.96
0.244	219.6	0.244	219.6	0.244	219.6	0.244	219.6	0.244	219.6	0.244	219.6	0.244	219.6
0.25925	219.6	0.25925	219.6	0.25925	219.6	0.25925	219.6	0.25925	219.6	0.25925	219.6	0.25925	219.6

Depth below Pile Head = 15.00 m		Depth below Pile Head = 16.00 m		Depth below Pile Head = 17.00 m		Depth below Pile Head = 18.00 m		Depth below Pile Head = 19.00 m		Depth below Pile Head = 20.00 m		Depth below Pile Head = 21.00 m	
X	Y	X	Y	X	Y	X	Y	X	Y	X	Y	X	Y
0	0	0	0	0	0	0	0	0	0	0	0	0	0
7.22963E-05	14.64	0.003841398	548.43468	0.003926439	595.61185	0.00400203	642.78903	0.004069665	689.96621	0.000244	19520	0.000244	19520
0.00057837	29.28	0.007682797	962.46979	0.007852878	1045.2629	0.008004061	1128.056	0.00813933	1210.8491	0.000325333	19845.333	0.000325333	19845.333
0.001952	43.92	0.011524195	1213.5191	0.011779317	1317.9079	0.012006091	1422.2966	0.012208995	1526.6853	0.000406667	20170.667	0.000406667	20170.667
0.004626963	58.56	0.015365594	1346.0494	0.015705755	1461.8386	0.016008121	1577.6278	0.016278659	1693.417	0.000488	20496	0.000488	20496
0.009037037	73.2	0.019206992	1410.924	0.019632194	1532.2938	0.020010152	1653.6636	0.020348324	1775.0334	0.000569333	20821.333	0.000569333	20821.333
0.015616	87.84	0.02304839	1441.5063	0.023558633	1565.5068	0.024012182	1689.5074	0.024417989	1813.5079	0.000650667	21146.667	0.000650667	21146.667
0.02479763	102.48	0.026889789	1455.6666	0.027485072	1580.8853	0.028014212	1706.1039	0.028487654	1831.3225	0.000732	21472	0.000732	21472
0.037015704	117.12	0.030731187	1462.1687	0.031411511	1587.9467	0.032016243	1713.7246	0.032557319	1839.5026	0.000813333	21797.333	0.000813333	21797.333
0.052704	131.76	0.034572586	1465.1429	0.03533795	1591.1767	0.036018273	1717.2105	0.036626984	1843.2443	0.000894667	22122.667	0.000894667	22122.667
0.072296296	146.4	0.038413984	1466.5009	0.039264388	1592.6516	0.040020303	1718.8022	0.040696649	1844.9528	0.000976	22448	0.000976	22448
0.09622637	161.04	0.042255382	1467.1205	0.043190827	1593.3245	0.044022334	1719.5284	0.044766313	1845.7323	0.001057333	22773.333	0.001057333	22773.333
0.124928	175.68	0.046096781	1467.4031	0.047117266	1593.6314	0.048024364	1719.8596	0.048835978	1846.0878	0.001138667	23098.667	0.001138667	23098.667
0.15883496	190.32	0.049938179	1467.532	0.051043705	1593.7713	0.052026395	1720.0106	0.052905643	1846.2499	0.00122	23424	0.00122	23424
0.19838104	204.96	0.053779578	1467.5907	0.054970144	1593.8351	0.056028425	1720.0795	0.056975308	1846.3238	0.001301333	23749.333	0.001301333	23749.333
0.244	219.6	0.057620976	1467.6175	0.058896583	1593.8642	0.060030455	1720.1109	0.061044973	1846.3575	0.001382667	24074.667	0.001382667	24074.667
0.25925	219.6	0.061462374	1467.6297	0.062823021	1593.8775	0.064032486	1720.1252	0.065114638	1846.3729	0.001464	24400	0.001464	24400

Depth below Pile Head = 22.00 m		Depth below Pile Head = 23.00 m		Depth below Pile Head = 24.00 m		Depth below Pile Head = 25.00 m		Depth below Pile Head = 26.00 m		Depth below Pile Head = 27.00 m	
X	Y	X	Y	X	Y	X	Y	X	Y	X	Y
0	0	0	0	0	0	0	0	0	0	0	0
0.000244	19520	0.000244	19520	0.000244	19520	0.000244	19520	0.000244	19520	0.000244	19520
0.000325333	19845.333	0.000325333	19845.333	0.000325333	19845.333	0.000325333	19845.333	0.000325333	19845.333	0.000325333	19845.333
0.000406667	20170.667	0.000406667	20170.667	0.000406667	20170.667	0.000406667	20170.667	0.000406667	20170.667	0.000406667	20170.667
0.000488	20496	0.000488	20496	0.000488	20496	0.000488	20496	0.000488	20496	0.000488	20496
0.000569333	20821.333	0.000569333	20821.333	0.000569333	20821.333	0.000569333	20821.333	0.000569333	20821.333	0.000569333	20821.333
0.000650667	21146.667	0.000650667	21146.667	0.000650667	21146.667	0.000650667	21146.667	0.000650667	21146.667	0.000650667	21146.667
0.000732	21472	0.000732	21472	0.000732	21472	0.000732	21472	0.000732	21472	0.000732	21472
0.000813333	21797.333	0.000813333	21797.333	0.000813333	21797.333	0.000813333	21797.333	0.000813333	21797.333	0.000813333	21797.333
0.000894667	22122.667	0.000894667	22122.667	0.000894667	22122.667	0.000894667	22122.667	0.000894667	22122.667	0.000894667	22122.667
0.000976	22448	0.000976	22448	0.000976	22448	0.000976	22448	0.000976	22448	0.000976	22448
0.001057333	22773.333	0.001057333	22773.333	0.001057333	22773.333	0.001057333	22773.333	0.001057333	22773.333	0.001057333	22773.333
0.001138667	23098.667	0.001138667	23098.667	0.001138667	23098.667	0.001138667	23098.667	0.001138667	23098.667	0.001138667	23098.667
0.00122	23424	0.00122	23424	0.00122	23424	0.00122	23424	0.00122	23424	0.00122	23424
0.001301333	23749.333	0.001301333	23749.333	0.001301333	23749.333	0.001301333	23749.333	0.001301333	23749.333	0.001301333	23749.333
0.001382667	24074.667	0.001382667	24074.667	0.001382667	24074.667	0.001382667	24074.667	0.001382667	24074.667	0.001382667	24074.667
0.001464	24400	0.001464	24400	0.001464	24400	0.001464	24400	0.001464	24400	0.001464	24400

APPENDIX D

Wet Well Pile p-y Curves (Seismic Case)

p-y Curves **Seismic Case - Wet Well Piles** Legend!A1

X	y (m)
Y	p (kN/m)

Depth below Pile Head = 1.00 m		Depth below Pile Head = 2.00 m		Depth below Pile Head = 3.00 m		Depth below Pile Head = 4.00 m		Depth below Pile Head = 5.00 m		Depth below Pile Head = 6.00 m		Depth below Pile Head = 7.00 m	
X	Y	X	Y	X	Y	X	Y	X	Y	X	Y	X	Y
0	0	0	0	0	0	0	0	0	0	0	0	0	0
7.22963E-05	3.2693333	7.22963E-05	3.5652	7.22963E-05	4.3758667	7.22963E-05	5.1865333	7.22963E-05	5.9972	7.22963E-05	6.222	7.22963E-05	6.222
0.00057837	6.5386667	0.00057837	7.1304	0.00057837	8.7517333	0.00057837	10.373067	0.00057837	11.9944	0.00057837	12.444	0.00057837	12.444
0.001952	9.808	0.001952	10.6956	0.001952	13.1276	0.001952	15.5596	0.001952	17.9916	0.001952	18.666	0.001952	18.666
0.004626963	13.077333	0.004626963	14.2608	0.004626963	17.503467	0.004626963	20.746133	0.004626963	23.9888	0.004626963	24.888	0.004626963	24.888
0.009037037	16.346667	0.009037037	17.826	0.009037037	21.879333	0.009037037	25.932667	0.009037037	29.986	0.009037037	31.11	0.009037037	31.11
0.015616	19.616	0.015616	21.3912	0.015616	26.2552	0.015616	31.1192	0.015616	35.9832	0.015616	37.332	0.015616	37.332
0.02479763	22.885333	0.02479763	24.9564	0.02479763	30.631067	0.02479763	36.305733	0.02479763	41.9804	0.02479763	43.554	0.02479763	43.554
0.037015704	26.154667	0.037015704	28.5216	0.037015704	35.006933	0.037015704	41.492267	0.037015704	47.9776	0.037015704	49.776	0.037015704	49.776
0.052704	29.424	0.052704	32.0868	0.052704	39.3828	0.052704	46.6788	0.052704	53.9748	0.052704	55.998	0.052704	55.998
0.072296296	32.693333	0.072296296	35.652	0.072296296	43.758667	0.072296296	51.865333	0.072296296	59.972	0.072296296	62.22	0.072296296	62.22
0.09622637	35.962667	0.09622637	39.2172	0.09622637	48.134533	0.09622637	57.051867	0.09622637	65.9692	0.09622637	68.442	0.09622637	68.442
0.124928	39.232	0.124928	42.7824	0.124928	52.5104	0.124928	62.2384	0.124928	71.9664	0.124928	74.664	0.124928	74.664
0.15883496	42.501333	0.15883496	46.3476	0.15883496	56.886267	0.15883496	67.424933	0.15883496	77.9636	0.15883496	80.886	0.15883496	80.886
0.19838104	45.770667	0.19838104	49.9128	0.19838104	61.262133	0.19838104	72.611467	0.19838104	83.9608	0.19838104	87.108	0.19838104	87.108
0.244	49.04	0.244	53.478	0.244	65.638	0.244	77.798	0.244	89.958	0.244	93.33	0.244	93.33
0.25925	49.04	0.25925	53.478	0.25925	65.638	0.25925	77.798	0.25925	89.958	0.25925	93.33	0.25925	93.33

Depth below Pile Head = 8.00 m		Depth below Pile Head = 9.00 m		Depth below Pile Head = 10.00 m		Depth below Pile Head = 11.00 m		Depth below Pile Head = 12.00 m		Depth below Pile Head = 13.00 m		Depth below Pile Head = 14.00 m	
X	Y	X	Y	X	Y	X	Y	X	Y	X	Y	X	Y
0	0	0	0	0	0	0	0	0	0	0	0	0	0
7.22963E-05	6.222	7.22963E-05	6.222	7.22963E-05	6.222	7.22963E-05	6.222	7.22963E-05	6.222	7.22963E-05	6.222	7.22963E-05	6.222
0.00057837	12.444	0.00057837	12.444	0.00057837	12.444	0.00057837	12.444	0.00057837	12.444	0.00057837	12.444	0.00057837	12.444
0.001952	18.666	0.001952	18.666	0.001952	18.666	0.001952	18.666	0.001952	18.666	0.001952	18.666	0.001952	18.666
0.004626963	24.888	0.004626963	24.888	0.004626963	24.888	0.004626963	24.888	0.004626963	24.888	0.004626963	24.888	0.004626963	24.888
0.009037037	31.11	0.009037037	31.11	0.009037037	31.11	0.009037037	31.11	0.009037037	31.11	0.009037037	31.11	0.009037037	31.11
0.015616	37.332	0.015616	37.332	0.015616	37.332	0.015616	37.332	0.015616	37.332	0.015616	37.332	0.015616	37.332
0.02479763	43.554	0.02479763	43.554	0.02479763	43.554	0.02479763	43.554	0.02479763	43.554	0.02479763	43.554	0.02479763	43.554
0.037015704	49.776	0.037015704	49.776	0.037015704	49.776	0.037015704	49.776	0.037015704	49.776	0.037015704	49.776	0.037015704	49.776
0.052704	55.998	0.052704	55.998	0.052704	55.998	0.052704	55.998	0.052704	55.998	0.052704	55.998	0.052704	55.998
0.072296296	62.22	0.072296296	62.22	0.072296296	62.22	0.072296296	62.22	0.072296296	62.22	0.072296296	62.22	0.072296296	62.22
0.09622637	68.442	0.09622637	68.442	0.09622637	68.442	0.09622637	68.442	0.09622637	68.442	0.09622637	68.442	0.09622637	68.442
0.124928	74.664	0.124928	74.664	0.124928	74.664	0.124928	74.664	0.124928	74.664	0.124928	74.664	0.124928	74.664
0.15883496	80.886	0.15883496	80.886	0.15883496	80.886	0.15883496	80.886	0.15883496	80.886	0.15883496	80.886	0.15883496	80.886
0.19838104	87.108	0.19838104	87.108	0.19838104	87.108	0.19838104	87.108	0.19838104	87.108	0.19838104	87.108	0.19838104	87.108
0.244	93.33	0.244	93.33	0.244	93.33	0.244	93.33	0.244	93.33	0.244	93.33	0.244	93.33
0.25925	93.33	0.25925	93.33	0.25925	93.33	0.25925	93.33	0.25925	93.33	0.25925	93.33	0.25925	93.33

Depth below Pile Head = 15.00 m		Depth below Pile Head = 16.00 m		Depth below Pile Head = 17.00 m		Depth below Pile Head = 18.00 m		Depth below Pile Head = 19.00 m		Depth below Pile Head = 20.00 m		Depth below Pile Head = 21.00 m	
X	Y	X	Y	X	Y	X	Y	X	Y	X	Y	X	Y
0	0	0	0	0	0	0	0	0	0	0	0	0	0
7.22963E-05	6.222	0.003841398	548.43468	0.003926439	595.61185	0.00400203	642.78903	0.004069665	689.96621	0.000244	19520	0.000244	19520
0.00057837	12.444	0.007682797	962.46979	0.007852878	1045.2629	0.008004061	1128.056	0.00813933	1210.8491	0.000325333	19845.333	0.000325333	19845.333
0.001952	18.666	0.011524195	1213.5191	0.011779317	1317.9079	0.012006091	1422.2966	0.012208995	1526.6853	0.000406667	20170.667	0.000406667	20170.667
0.004626963	24.888	0.015365594	1346.0494	0.015705755	1461.8386	0.016008121	1577.6278	0.016278659	1693.417	0.000488	20496	0.000488	20496
0.009037037	31.11	0.019206992	1410.924	0.019632194	1532.2938	0.020010152	1653.6636	0.020348324	1775.0334	0.000569333	20821.333	0.000569333	20821.333
0.015616	37.332	0.02304839	1441.5063	0.023558633	1565.5068	0.024012182	1689.5074	0.024417989	1813.5079	0.000650667	21146.667	0.000650667	21146.667
0.02479763	43.554	0.026889789	1455.6666	0.027485072	1580.8853	0.028014212	1706.1039	0.028487654	1831.3225	0.000732	21472	0.000732	21472
0.037015704	49.776	0.030731187	1462.1687	0.031411511	1587.9467	0.032016243	1713.7246	0.032557319	1839.5026	0.000813333	21797.333	0.000813333	21797.333
0.052704	55.998	0.034572586	1465.1429	0.03533795	1591.1767	0.036018273	1717.2105	0.036626984	1843.2443	0.000894667	22122.667	0.000894667	22122.667
0.072296296	62.22	0.038413984	1466.5009	0.039264388	1592.6516	0.040020303	1718.8022	0.040696649	1844.9528	0.000976	22448	0.000976	22448
0.09622637	68.442	0.042255382	1467.1205	0.043190827	1593.3245	0.044022334	1719.5284	0.044766313	1845.7323	0.001057333	22773.333	0.001057333	22773.333
0.124928	74.664	0.046096781	1467.4031	0.047117266	1593.6314	0.048024364	1719.8596	0.048835978	1846.0878	0.001138667	23098.667	0.001138667	23098.667
0.15883496	80.886	0.049938179	1467.532	0.051043705	1593.7713	0.052026395	1720.0106	0.052905643	1846.2499	0.00122	23424	0.00122	23424
0.19838104	87.108	0.053779578	1467.5907	0.054970144	1593.8351	0.056028425	1720.0795	0.056975308	1846.3238	0.001301333	23749.333	0.001301333	23749.333
0.244	93.33	0.057620976	1467.6175	0.058896583	1593.8642	0.060030455	1720.1109	0.061044973	1846.3575	0.001382667	24074.667	0.001382667	24074.667
0.25925	93.33	0.061462374	1467.6297	0.062823021	1593.8775	0.064032486	1720.1252	0.065114638	1846.3729	0.001464	24400	0.001464	24400

Depth below Pile Head = 22.00 m		Depth below Pile Head = 23.00 m		Depth below Pile Head = 24.00 m		Depth below Pile Head = 25.00 m		Depth below Pile Head = 26.00 m		Depth below Pile Head = 27.00 m	
X	Y	X	Y	X	Y	X	Y	X	Y	X	Y
0	0	0	0	0	0	0	0	0	0	0	0
0.000244	19520	0.000244	19520	0.000244	19520	0.000244	19520	0.000244	19520	0.000244	19520
0.000325333	19845.333	0.000325333	19845.333	0.000325333	19845.333	0.000325333	19845.333	0.000325333	19845.333	0.000325333	19845.333
0.000406667	20170.667	0.000406667	20170.667	0.000406667	20170.667	0.000406667	20170.667	0.000406667	20170.667	0.000406667	20170.667
0.000488	20496	0.000488	20496	0.000488	20496	0.000488	20496	0.000488	20496	0.000488	20496
0.000569333	20821.333	0.000569333	20821.333	0.000569333	20821.333	0.000569333	20821.333	0.000569333	20821.333	0.000569333	20821.333
0.000650667	21146.667	0.000650667	21146.667	0.000650667	21146.667	0.000650667	21146.667	0.000650667	21146.667	0.000650667	21146.667
0.000732	21472	0.000732	21472	0.000732	21472	0.000732	21472	0.000732	21472	0.000732	21472
0.000813333	21797.333	0.000813333	21797.333	0.000813333	21797.333	0.000813333	21797.333	0.000813333	21797.333	0.000813333	21797.333
0.000894667	22122.667	0.000894667	22122.667	0.000894667	22122.667	0.000894667	22122.667	0.000894667	22122.667	0.000894667	22122.667
0.000976	22448	0.000976	22448	0.000976	22448	0.000976	22448	0.000976	22448	0.000976	22448
0.001057333	22773.333	0.001057333	22773.333	0.001057333	22773.333	0.001057333	22773.333	0.001057333	22773.333	0.001057333	22773.333
0.001138667	23098.667	0.001138667	23098.667	0.001138667	23098.667	0.001138667	23098.667	0.001138667	23098.667	0.001138667	23098.667
0.00122	23424	0.00122	23424	0.00122	23424	0.00122	23424	0.00122	23424	0.00122	23424
0.001301333	23749.333	0.001301333	23749.333	0.001301333	23749.333	0.001301333	23749.333	0.001301333	23749.333	0.001301333	23749.333
0.001382667	24074.667	0.001382667	24074.667	0.001382667	24074.667	0.001382667	24074.667	0.001382667	24074.667	0.001382667	24074.667
0.001464	24400	0.001464	24400	0.001464	24400	0.001464	24400	0.001464	24400	0.001464	24400

APPENDIX E

Civil and Structural Drawings (C1 to C5 and S1 to S3)

GENERAL NOTES

1. DIMENSIONS ARE IN METRIC UNLESS OTHERWISE NOTED.
2. ELEVATIONS ARE IN METERS TO GEODETIC DATUM.
3. WHEN A CONFLICT BETWEEN THE SPECIFICATIONS ARISES, THE MOST STRINGENT SHALL APPLY.
4. EXCAVATE AND CONFIRM HORIZONTAL AND VERTICAL LOCATIONS OF ALL EXISTING UNDERGROUND WORKS AT CONNECTION AND CROSSING POINTS 48 HOURS PRIOR TO STARTING CONSTRUCTION ON ANY NEW WORK, IMMEDIATELY INFORM ENGINEER OF ANY CONFLICTS.
5. WHERE A TRENCH IS UNDER OR WITHIN 1.0m OF THE EDGE OF A ROAD OR DRIVEWAY, USE PITRUN GRAVEL BACKFILL FROM THE TOP OF THE PIPE BEDDING TO THE TOP OF THE ROAD, PARKING OR DRIVEWAY SUBGRADE.
6. DO NOT START ANY BACKFILL OPERATION UNTIL THE WORKS HAVE BEEN INSPECTED BY THE ENGINEER.
7. AFTER CONSTRUCTION, RESTORE WORK AREAS AND ALL EXISTING FEATURES TO THEIR ORIGINAL CONDITION OR BETTER AND AS FOLLOWS:
   - REINSTATE TRENCHES IN ACCORDANCE WITH BYLAW 1000 DETAIL G4 & G5.
   - REINSTATE ASPHALT EITHER HALF-LANE OF FULL LANE ALONG ROADWAYS AS REQUIRED BASED ON GROUND CONDITIONS.
   - ALL LANDSCAPING, RETAINING WALLS, DITCHES, CULVERTS, SEEPAGE PITS, STREET SIGNAGE, AND IRRIGATION TO BE REINSTATED TO THE ORIGINAL CONDITION OR BETTER. PROVIDE 150 mm DEPTH TOPSOIL AND SEED WHERE REQUIRED.
   - REINSTATE ROAD SHOULDERS WITH 100 mm RAP COMPACTED TO 95% MODIFIED PROTRACTOR DENSITY.
   - FOR TEMPORARY TRENCH RESTORATION, PLACE COLD MIX ON DISTURBED, PREVIOUSLY PAVED AREAS PRIOR TO EACH WEEKEND OR HOLIDAY SHUTDOWNS.
8. MAINTAIN VEHICULAR AND PEDESTRIAN ACCESS ON ALL ROADS AND PARKING AREAS DURING CONSTRUCTION IN ACCORDANCE WITH TRAFFIC MANAGEMENT PLAN.
9. ADJUST ALL PROPOSED AND EXISTING APPURTENANCES TO MEET THE FINAL DESIGN GRADES.
10. COMPACT TRENCH BACKFILL AND ROAD BASE TO 100% STANDARD PROCTOR DENSITY FOR THE TOP 300mm AND 95% STANDARD PROCTOR BELOW.
11. DENSO TAPE AND WRAP ALL BURIED COUPLINGS, JOINT RESTRAINTS AND TIE RODS.
12. UNLESS OTHERWISE NOTED ALL CONSTRUCTION AND MATERIALS TO BE IN ACCORDANCE WITH CONTRACT DOCUMENTS FOR WSES PROJECT NO. 225-24, THE CITY OF LANGFORD BYLAW 1000, THE CITY OF LANGFORD SUPPLEMENTS TO THE MASTER MUNICIPAL CONSTRUCTION DOCUMENTS, AND MASTER MUNICIPAL CONSTRUCTION DOCUMENTS, (VOLUME II).
13. OBTAIN AND PAY FOR A BY-LAW 33 PERMIT TO CONSTRUCT WORKS ON A MUNICIPAL RIGHT OF WAY FROM THE CITY OF LANGFORD ENGINEERING DEPARTMENT 48 HOURS PRIOR TO THE START OF ANY CONSTRUCTION.
14. LOCATION OF EXISTING SITE SERVICES WERE OBTAINED INFORMATION PROVIDED BY CRD WATER, FORTIS, CALBE, TELUS, AND BC HYDRO.
15. BC HYDRO, TELUS, CABLE, AND FORTIS FACILITIES ARE SHOWN SCHEMATIC ON THE DRAWINGS, CONTACT "BC ONE CALL" AT 1-800-474-6886 A MINIMUM OF 48 HOURS PRIOR TO START OF CONSTRUCTION.
16. ENSURE THAT ALL EXISTING SERVICES REMAIN IN SERVICE DURING CONSTRUCTION.
17. PROTECT ALL TREES FROM DAMAGE DURING CONSTRUCTION, HAND DIG WHERE ROOTS OVER 50 mm Ø ARE ENCOUNTERED. OBTAIN PERMISSION FROM THE ENGINEER AND CITY OF LANGFORD PRIOR TO REMOVAL OF ANY TREES ON PRIVATE OR PUBLIC PROPERTY.
18. CONTRACTOR TO MAINTAIN AN UP-TO-DATE SET OF AS-CONSTRUCTED DRAWINGS AT ALL TIMES. AS-CONSTRUCTED DRAWINGS TO BE DELIVERED TO THE ENGINEER PRIOR TO SUBSTANTIAL PERFORMANCE FOR PREPARATIONS OF FINAL DRAWINGS.
19. ALL MANHOLES TO BE 1050 mm Ø UNLESS OTHERWISE NOTED ON DRAWINGS.
20. ASPHALT REINSTATEMENT TO BE REVIEWED WITH THE CITY OF LANGFORD AND WSES PRIOR TO PAVING TO CONFIRM FINAL PAVING EXTENTS.
21. NOTIFY CITY OF LANGFORD ENGINEERING DEPARTMENT IF RE-INSTATEMENT/RE-CONSTRUCTION OF ANY ROCK PITS REQUIRED.
22. CONTRACTOR TO SUPPLY TRAFFIC MANAGEMENT PLAN AND PARKING PLAN TO CITY FOR REVIEW AND APPROVAL PRIOR TO ISSUANCE OF BYLAW 33 PERMIT.
23. ANY DISTURBED MONUMENTS OR PINS TO BE RE-INSTATEMENT BY BCLS AT CONTRACTORS EXPENSE.

SEWER

1. GRAVITY SEWER PIPE UP TO AND INCLUDING 150mm DIAMETER TO BE PVC DR28, AND DR35 FOR 200mm DIAMETER AND OVER. PIPE TO BE C.S.A. APPROVED PVC.
2. SEWER FORCEMAIN PRESSURE PIPE TO BE AS NOTED. PRESSURE TEST TO 150psi FOR ONE HOUR WITH ZERO LEAKAGE.
3. ALL FORCE MAIN BENDS AND TEES TO HAVE TRUST BLOCKS AND JOINT RESTRAINTS.

HYDRO, TELEPHONE, CABLE, STREET LIGHTING AND GAS (SEE PBX DRAWINGS & SPECIFICATIONS)

1. CONTACT "BC ONE CALL" AT 1-800-474-6886 A MINIMUM OF 48 HOURS PRIOR TO START OF CONSTRUCTION.
2. BC HYDRO, TELUS, CABLE AND GAS FACILITIES ARE SHOWN SCHEMATICALLY ON THIS DRAWING. REFER TO UTILITY COMPANY DRAWINGS FOR CONSTRUCTION DETAILS.
3. CONSTRUCT UNDERGROUND HYDRO, TELEPHONE AND CABLE AS SPECIFIED AND IN ACCORDANCE WITH BC HYDRO, TELUS AND SHAW CABLE STANDARD SPECIFICATIONS AND DRAWINGS.

ENVIRONMENTAL PROTECTION NOTES

1. ALL MACHINES SHALL CARRY SPILL KITS.
2. CONTRACTOR TO CONFORM TO LANGFORD WATERCOURSE AND DRAINAGE REGULATION BYLAWS DURING CONSTRUCTION. ANY REQUIRED PERMITS TO BE OBTAINED BY CONTRACTOR PRIOR TO CONSTRUCTION.
3. THE CONTRACTOR SHALL PROVIDE AND POST AN EMERGENCY RESPONSE PLAN IN CASE OF ANY SPILLS.
4. PROTECT ALL TREES FROM DAMAGE DURING CONSTRUCTION. HAND DIG WHERE ROOTS OVER 50mm ARE ENCOUNTERED.

GEOTECHNICAL

1. EXCAVATED SLOPES AND FOUNDATIONS TO BE INSPECTED AND APPROVED BY THE GEOTECHNICAL ENGINEER.
2. SHORING DESIGN SHALL BE PERFORMED BY THE CONTRACTOR'S PROFESSIONAL ENGINEER.
3. EXTENT OF EXCAVATIONS SHALL BE LIMITED SUCH THAT ALL ROADWAYS REMAIN UNOBSTRUCTED DURING CONSTRUCTION AND EXISTING FEATURES SUCH AS TREES, BUILDINGS AND BURIED UTILITIES ARE UNDISTURBED UNLESS NOTED OTHERWISE.
4. REFER TO WSP GEOTECHNICAL REPORT DATED MAY 27, 2025 FOR SOIL AND WATER TABLE ELEVATIONS.

SURVEY AND MAPPING

1. CONTRACTOR TO ENSURE EXISTING MONUMENTS ARE NOT DISTURBED DURING CONSTRUCTION. ANY MONUMENTS IN DANGER OF DISTURBANCE ARE TO BE REFERENCED AND REPLACED AT THE CONTRACTOR'S EXPENSE BY A B.C.L.S. IF DISTURBED.
2. PRE-CONSTRUCTION SURVEY BY LEVEL GEOMATICS, JUNE 9, 2025.
3. PRE-CONSTRUCTION SURVEY IS BASED ON GROUND LEVEL COORDINATES, AND GEODETIC SURVEY OF CANADA DATUM.
4. CONTRACTOR TO CONFIRM LOCATION OFF ALL UTILITIES PRIOR TO ANY CONSTRUCTION.
5. CONTRACTOR CAN REQUEST DIGITAL DRAWINGS FOR SURVEY CONTROL AND LAYOUT.

SITE 1 - DELEM DRIVE PUMP STATION

DRAWING LIST

Sheet No.	Drawing No.	Sheet Title
GENERAL/CIVIL		
1	C1	LOCATION PLAN AND GENERAL NOTES
2	C2	SITE PLAN
3	C3	SECTIONS
4	C4	WET WELL ELEVATION
5	C5	DETAILS
STRUCTURAL		
6 to 7	S1.0 to S2.0	ALL STRUCTURAL
ELECTRICAL		
8 to 33	E001 to E601	ALL ELECTRICAL
BARSKI (OWNER SUPPLIED)		
34	25-101	DELEM LIFT STATION

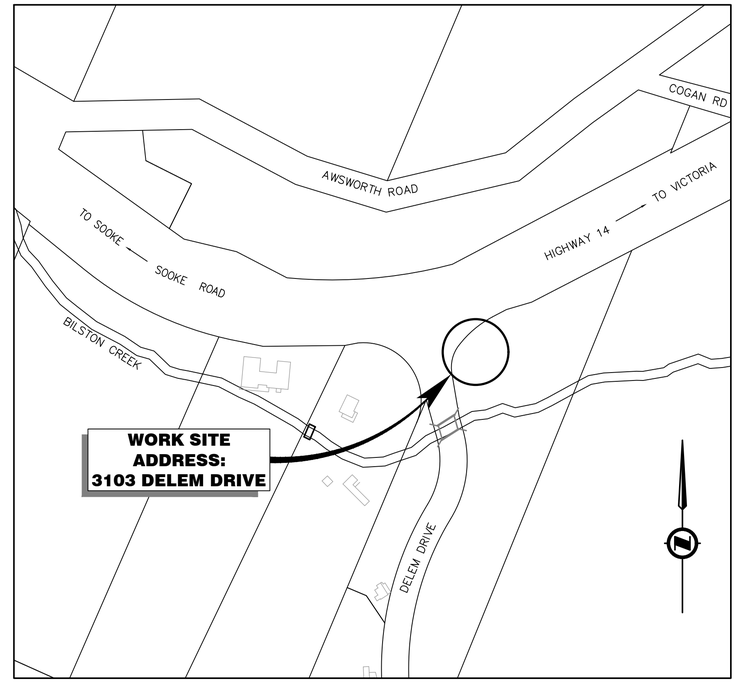

LOCATION PLAN (LANGFORD)
1:2000

LEGEND

PROPOSED	EXISTING	DESCRIPTION
		PROPERTY LINE
		EASEMENT LINE
	108	GROUND CONTOUR
		CURB AND GUTTER
		PAVED ROAD EDGE
		GRAVEL ROAD EDGE
		SANITARY SEWER & MANHOLE
		SANITARY FORCEMAIN
		STORM SEWER & MANHOLE
		CATCH BASIN
		STORM HEADWALLS & CULVERT
		WATERMAIN AND VALVE
		FIRE HYDRANT
		BC GAS MAIN & VALVE
		BC HYDRO/TEL DUCTS
		UTILITY POLE & ANCHOR
		STREETLIGHT DUCT
		STREETLIGHT
		FENCE
		TREE/VEGETATION LINE
		PATH/TRAIL
		TOP OF BANK
		TOE OF BANK

WEST SHORE ENVIRONMENTAL SERVICES LP
DELEM DRIVE SANITARY SEWAGE PUMP STATION
WSES PROJECT: 225-24

ISSUED FOR 90% REVIEW
JANUARY 9, 2026

colquitz engineering

West Shore Environmental Services

SANITARY SEWER

REV	DATE	REVISIONS	NAME

MINISTRY EGBC PERMIT TO PRACTICE 1003429

BRITISH COLUMBIA — MINISTRY OF TRANSPORTATION AND INFRASTRUCTURE
REGION_NAME
BRANCH

CAD FILENAME	CAD FILENAME	DESIGNED	LP DATE 2025-06-27
FILE NUMBER	FILE NUMBER	QUALITY CONTROL	XX DATE YYYY-MM-DD
PLOT DATE	YYYY-MM-DD	QUALITY ASSURANCE	XX DATE YYYY-MM-DD
		DRAWN	SH DATE YYYY-MM-DD

DELEM DRIVE
SEWAGE PUMP STATION
COVER

SCALE	PROJECT NUMBER	REG	DRAWING NUMBER	REV
0 0.5 1:50 2.5m	311.001	R	C1	

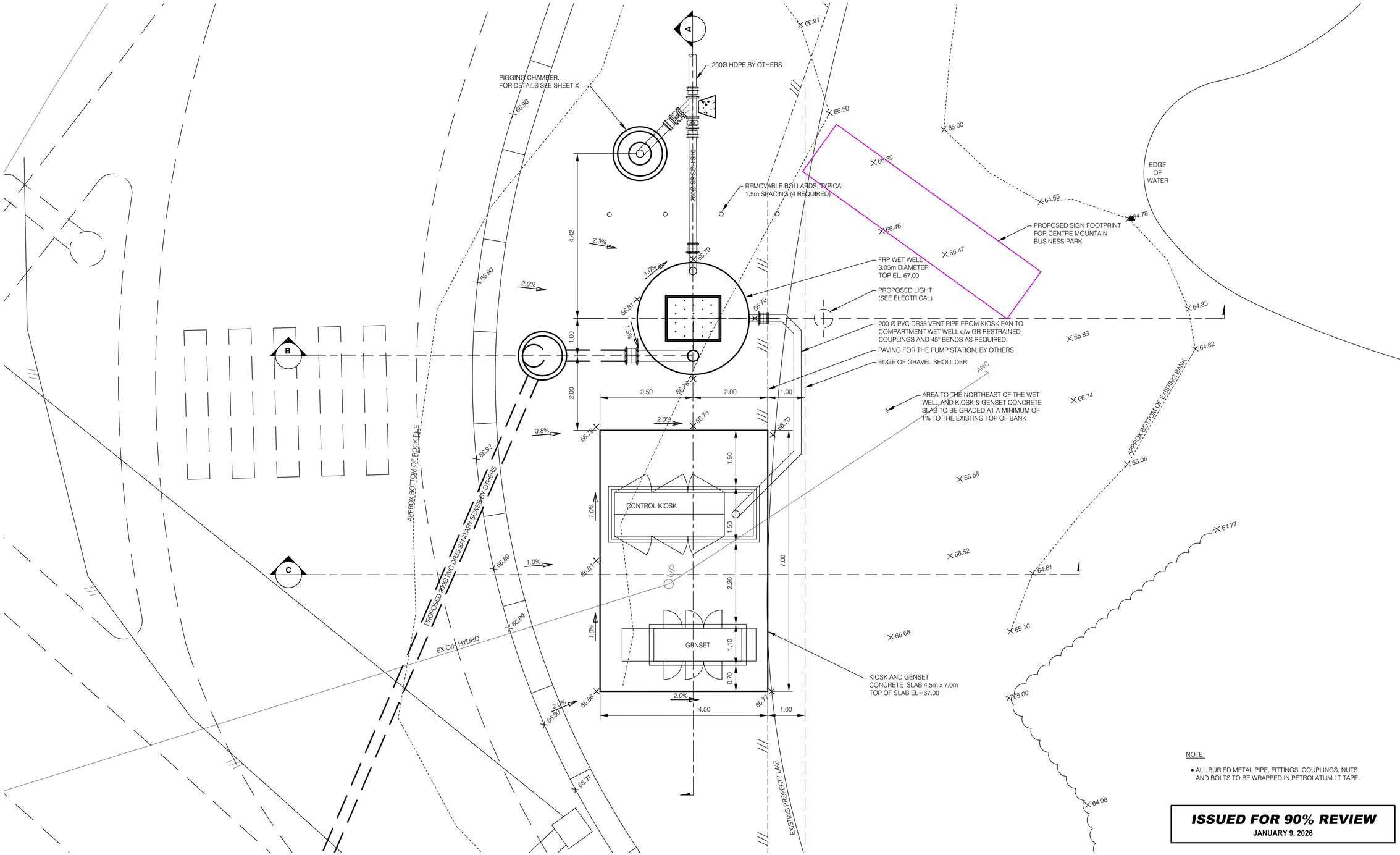

NOTE:

- ALL BURIED METAL PIPE, FITTINGS, COUPLINGS, NUTS AND BOLTS TO BE WRAPPED IN PETROLATUM LT TAPE.

ISSUED FOR 90% REVIEW
JANUARY 9, 2026

DELEM DRIVE PUMP STATION SITE PLAN

1:50

colquitz engineering

West Shore
Environmental Services
SANITARY SEWER

REV	DATE	REVISIONS	NAME

MINISTRY EGBC PERMIT TO PRACTICE 1003429

BRITISH COLUMBIA
MINISTRY OF TRANSPORTATION AND INFRASTRUCTURE
REGION_NAME
BRANCH

CAD FILENAME	CAD FILENAME	DESIGNED	LP DATE 2025-06-27
FILE NUMBER	FILE NUMBER	QUALITY CONTROL	XX DATE YYYY-MM-DD
PLOT DATE	YYYY-MM-DD	QUALITY ASSURANCE	XX DATE YYYY-MM-DD
		DRAWN	SH DATE YYYY-MM-DD

DELEM DRIVE
SEWAGE PUMP STATION
SITE PLAN

SCALE	PROJECT NUMBER	REG	DRAWING NUMBER	REV
0 0.5 1:50 2.5m	311.001	R	C2	

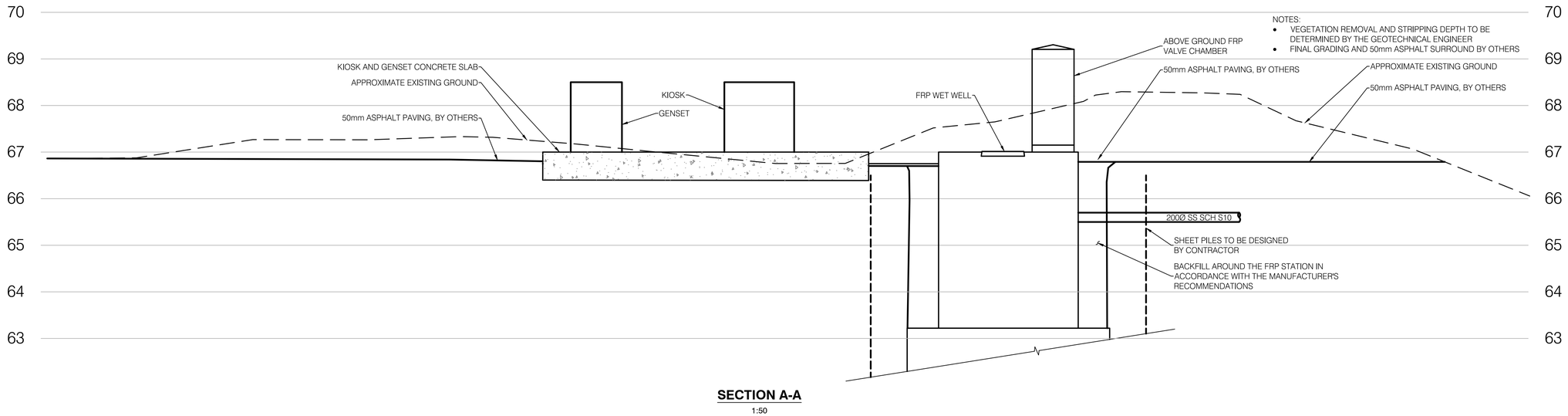

SECTION A-A
1:50

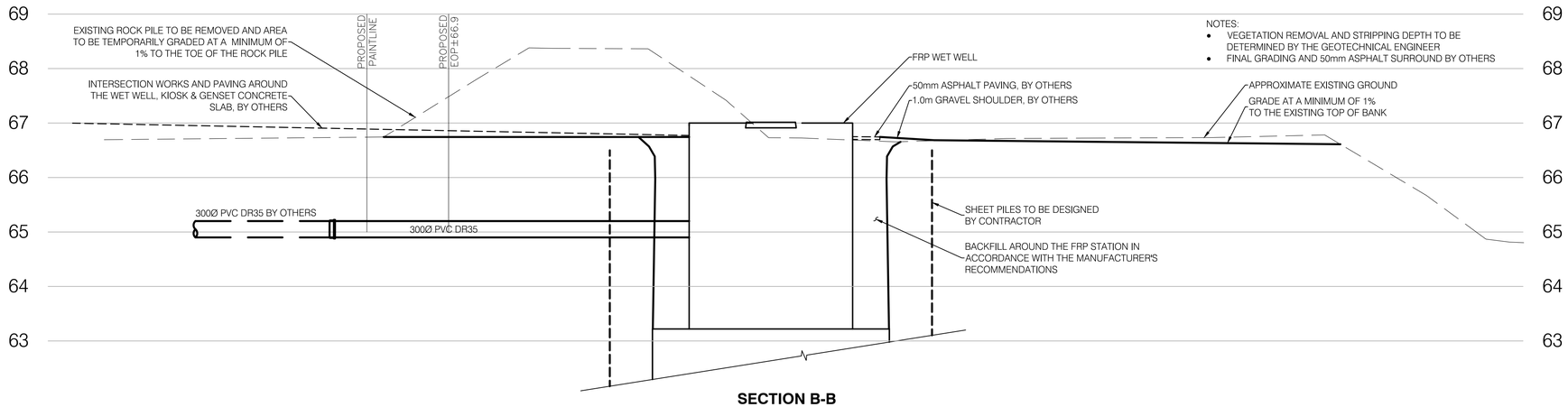

SECTION B-B
1:50

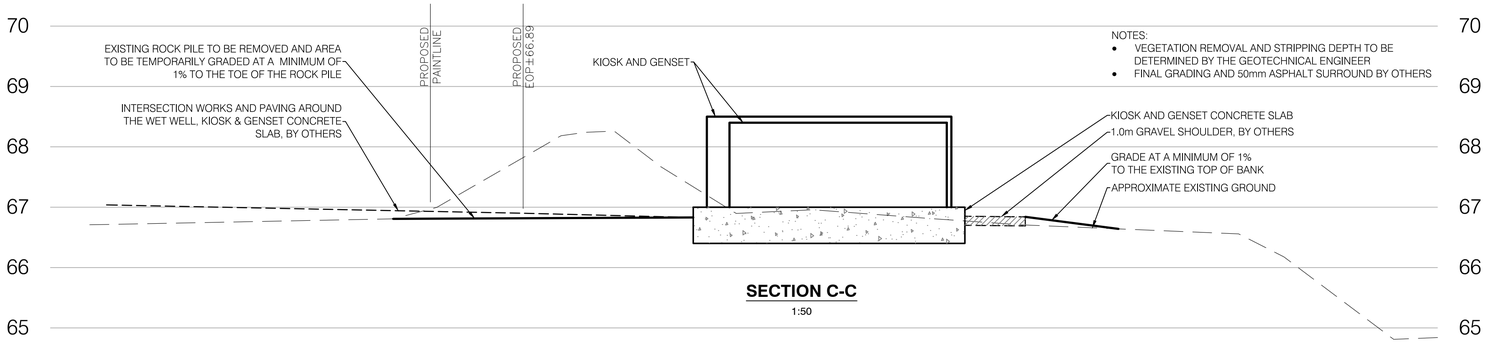

SECTION C-C
1:50

ISSUED FOR 90% REVIEW
JANUARY 9, 2026

colquitz engineering

West Shore
Environmental Services
SANITARY SEWER

REV	DATE	REVISIONS	NAME

MINISTRY EGBC PERMIT TO PRACTICE 1003429

BRITISH COLUMBIA
MINISTRY OF TRANSPORTATION AND INFRASTRUCTURE
REGION_NAME
BRANCH

CAD FILENAME CAD FILENAME
FILE NUMBER FILE NUMBER
PLOT DATE YYYY-MM-DD

DESIGNED LP DATE 2025-06-27
QUALITY CONTROL XX DATE YYYY-MM-DD
QUALITY ASSURANCE XX DATE YYYY-MM-DD
DRAWN SH DATE YYYY-MM-DD

DELEM DRIVE
SEWAGE PUMP STATION
SECTIONS

SCALE 0 0.5 1:50 2.5m

PROJECT NUMBER	REG	DRAWING NUMBER	REV
311.001	R	C3	

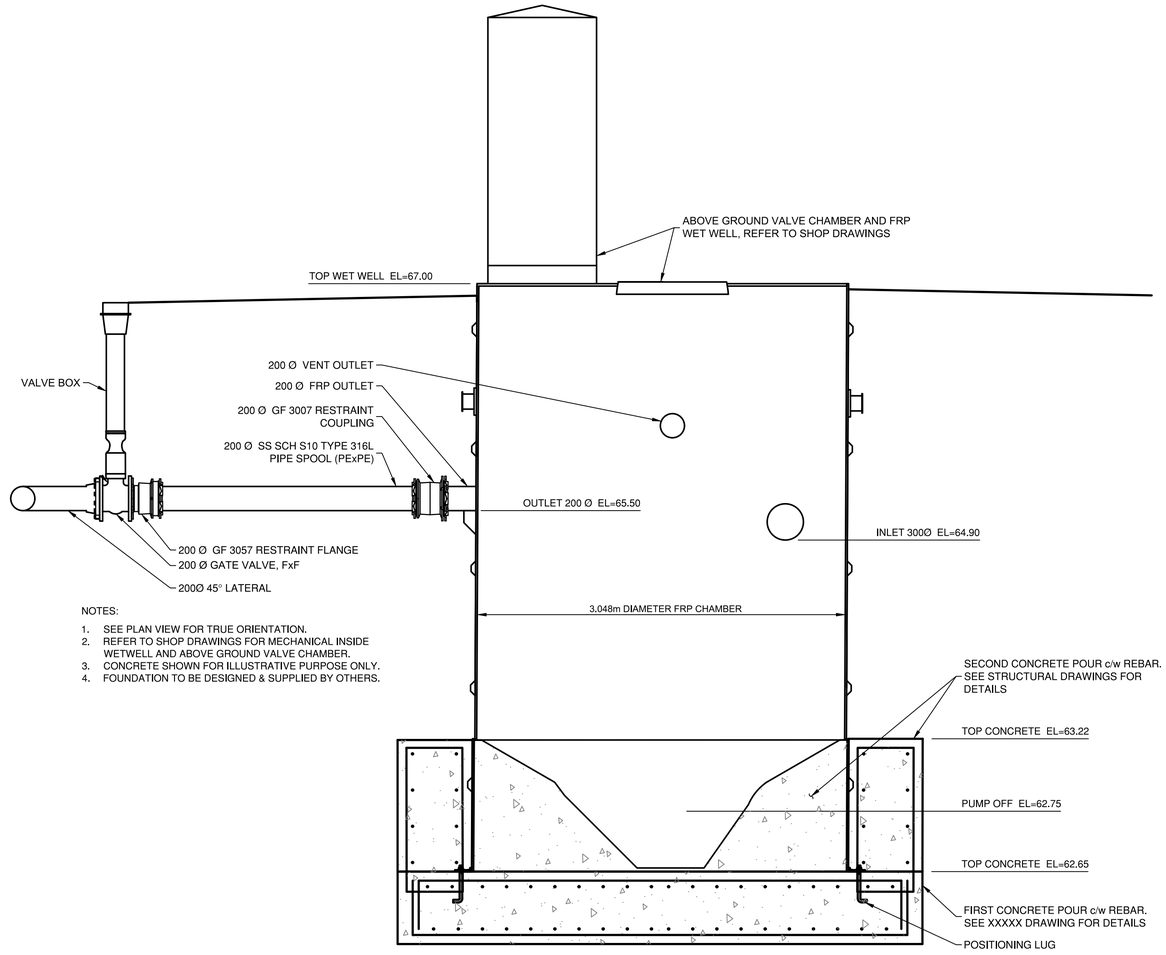

NOTES:

1. SEE PLAN VIEW FOR TRUE ORIENTATION.
2. REFER TO SHOP DRAWINGS FOR MECHANICAL INSIDE WETWELL AND ABOVE GROUND VALVE CHAMBER.
3. CONCRETE SHOWN FOR ILLUSTRATIVE PURPOSE ONLY.
4. FOUNDATION TO BE DESIGNED & SUPPLIED BY OTHERS.

WET WELL SECTION

1:25

ISSUED FOR 90% REVIEW

JANUARY 9, 2026

colquitz engineering

West Shore
Environmental Services
SANITARY SEWER

REV	DATE	REVISIONS	NAME

MINISTRY EGBC PERMIT TO PRACTICE 1003429

BRITISH COLUMBIA
MINISTRY OF TRANSPORTATION AND INFRASTRUCTURE
REGION_NAME
BRANCH

CAD FILENAME CAD FILENAME
FILE NUMBER FILE NUMBER
PLOT DATE YYYY-MM-DD

DESIGNED LP DATE 2025-06-27
QUALITY CONTROL XX DATE YYYY-MM-DD
QUALITY ASSURANCE XX DATE YYYY-MM-DD
DRAWN SH DATE YYYY-MM-DD

DELEM DRIVE
SEWAGE PUMP STATION
WET WELL

SCALE 0 250mm 1:25 1250mm

PROJECT NUMBER	REG	DRAWING NUMBER	REV
311.001	R	C5	

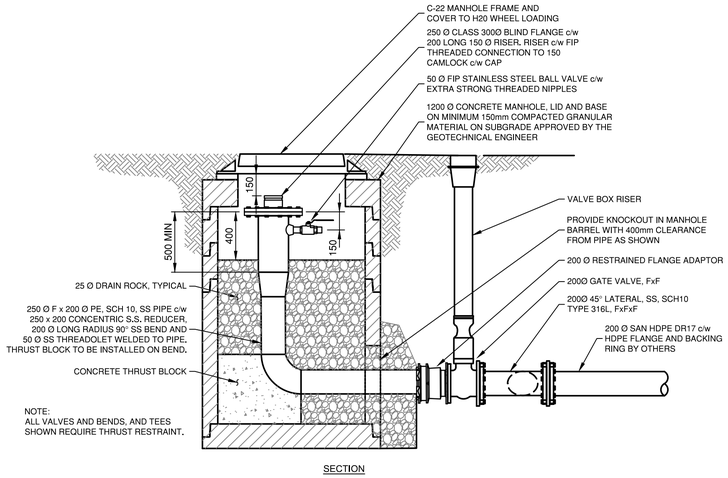

SECTION

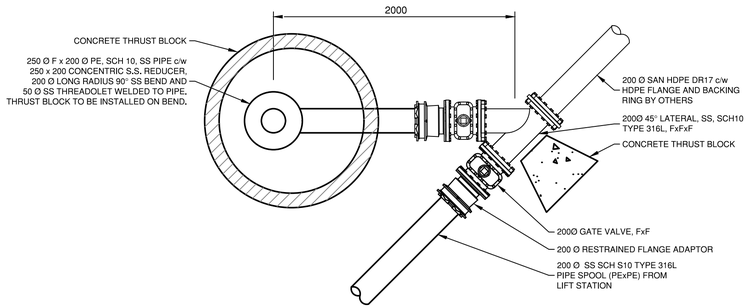

PLAN

PIGGING CHAMBER

1:25

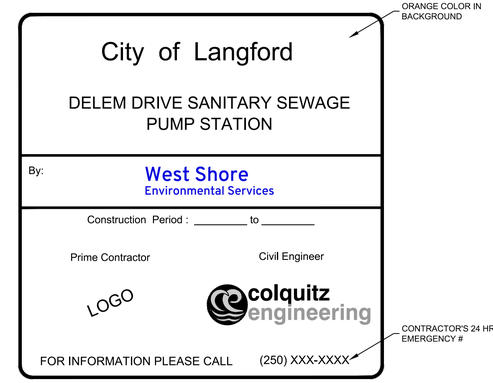

NOTES:

1. A MINIMUM OF TWO SIGNS ARE REQUIRED AND ARE TO BE SUPPLIED & INSTALLED BY THE CONTRACTOR IN LOCATIONS AS DIRECTED BY THE CITY'S REPRESENTATIVE.
2. SIGNS WILL BE 1.2m WIDE x 1.2m HIGH AND MADE OF 20mm PLYWOOD MOUNTED SECURELY ON SUPPORT POSTS.

PROJECT SIGN

NTS

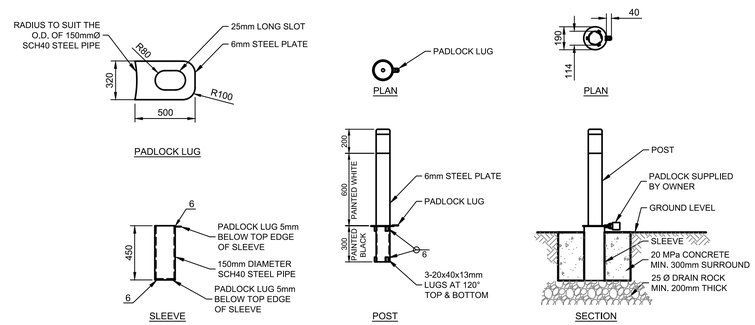

REMOVABLE BOLLARD

1:25

ISSUED FOR 90% REVIEW
JANUARY 9, 2026

colquitz engineering

West Shore
Environmental Services

SANITARY SEWER

REV	DATE	REVISIONS	NAME

MINISTRY EGBC PERMIT TO PRACTICE 1003429

BRITISH COLUMBIA
MINISTRY OF TRANSPORTATION AND INFRASTRUCTURE
REGION_NAME
BRANCH

CAD FILENAME	CAD FILENAME	DESIGNED	LP DATE 2025-06-27
FILE NUMBER	FILE NUMBER	QUALITY CONTROL	XX DATE YYYY-MM-DD
PLOT DATE	YYYY-MM-DD	QUALITY ASSURANCE	XX DATE YYYY-MM-DD
		DRAWN	SH DATE YYYY-MM-DD

DELEM DRIVE
SEWAGE PUMP STATION DETAILS

SCALE 0 250mm 1:25 1250mm

PROJECT NUMBER	REG	DRAWING NUMBER	REV
311.001	R	C5	

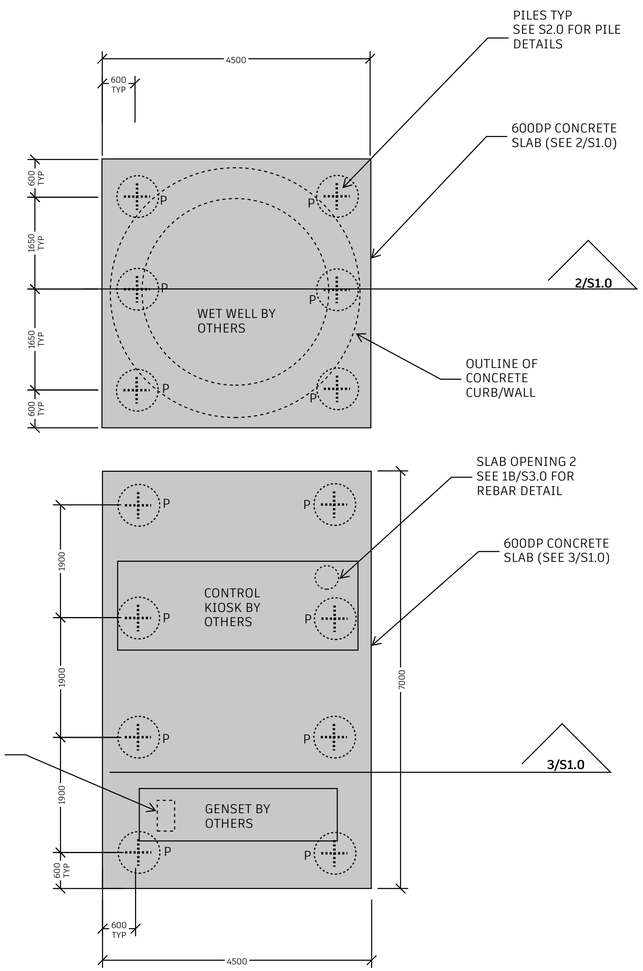

NOTE: REFER TO CIVIL DRAWINGS BY COLQUITZ ENGINEERING FOR EXACT LOCATIONS AND ELEVATIONS

1. PUMP STATION PLAN AND PILE LAYOUT
(1:50)

PILE	Pf (kN)	Hf (kN)
P	200	80

GENERAL NOTES:

1. STRUCTURAL DESIGN IS BASED ON CIVIL DRAWINGS PROVIDED TO GC ENGINEERING BY COLQUITZ ENGINEERING FOR DELEM DRIVE PUMP STATION DATED 2025-06-02
2. DO NOT SCALE FROM THESE DRAWINGS

CONCRETE:
1. CONCRETE IS TO BE MIXED, PLACED AND CURED TO CSA A23.1/23.2
2. MAX AGGREGATE SIZE TO BE 20mm
3. f'c = 50 MPa, C-XL
4. REJECT ALL CONCRETE WHEN TIME BETWEEN BATCHING AND PLACING EXCEEDS 2 HOURS
5. DO NOT ADD WATER TO CONCRETE ON SITE UNLESS APPROVED BY ENGINEER
6. CONSOLIDATE ALL CONCRETE USING MECHANICAL VIBRATORS
7. CURING OF CONCRETE TO MEET THE REQUIREMENTS FOR THE EXPOSURE CLASS AS OUTLINED IN CSA A23.1. CURING COMPOUNDS ARE NOT PERMITEED FOR EXPOSURE CLASS C-XL CONCRETE.
8. DO NOT USE ADMIXTURES OTHER THAN AIR ENTRAINMENT, STANDARD WATER REDUCERS OR SUPER PLASTICIZERS WITHOUT PRIOR APPROVAL OF ENGINEER. CALCIUM CHLORIDE ADMIXTURES ARE NOT PERMITTED.
9. PROVIDE 4-7% AIR ENTRAINMENT FOR ALL EXTERIOR CONCRETE

CONCRETE REINFORCEMENT:
1. CONFORM TO CSA G30 SERIES, fy = 400MPa FOR ALL REINFORCEMENT
2. CLEAR COVER TO REINFORCEMENT IS:

CAST AGAINST AND PERMANENTLY EXPOSED TO EARTH	75mm

3. REBAR TYP BEND REFER TO ASA TYPICAL BAR BENDS.

DESIGN DATA

DESIGN CODE: BCBC2024 , IMPORTANCE FACTOR (Is) = 1

DEAD LOADS:

PERMANENET EQUIPMENTS	7.2kPa
CONCRETE	24kN/m3

WIND LOADS: HOURLY WIND PRESSURE (1/50) 0.57kPa
TERRAIN: ROUGH, INTERNAL CATEGORY II

SEISMIC DATA Sa(0.2) = 1.32 Sa(5.0) = 0.13 Sa(0.5) = 1.19 Sa(10.0) = 0.045
Sa(1.0) = 0.697 PGA = 0.59 Sa(2.0) = 0.415 PGV = 0.85

STEEL PILE
EACH STEEL PILE IS DESIGNED FOR MAX VERTICAL LOAD OF 200kN AND MAXIMUM LATERAL LOAD OF 80kN AT THE TOP OF THE PILE

STEEL

PROVIDE STRUCTURAL STEEL TO CSA/CAN-G40.20-13/G40.21-13 OR ASTM STANDARD A 992/A992M. THE FOLLOWING SHOULD HAVE GRADES MINIMUM OF:

STRUCTURAL SHAPES	350W
HOLLOW STRUCTURAL SECTIONS	350W CLASS 'C'
BASE PLATES/PILE CAP	300W
PIPE SECTIONS	ASTM A53, 241W

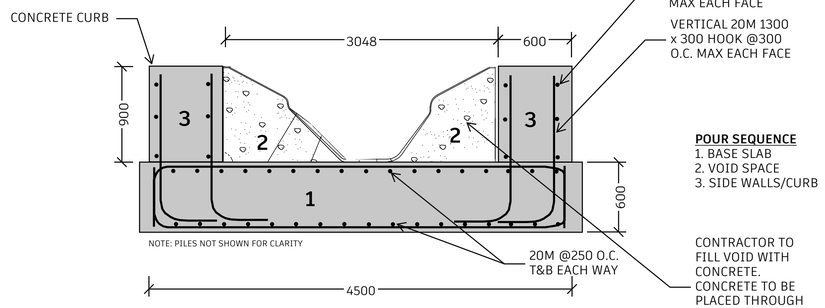

2. WET WELL SLAB AND CURB SECTION
(1:30)

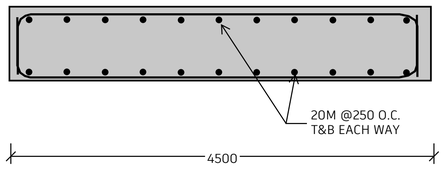

3. GENSET AND KIOSK SLAB SECTION
(1:30)

GC
Engineering
Victoria Office 778 533 9242
2148 Panaview Heights Victoria, BC V9M 1M2

Note
This drawing, as an instrument of service, is the property of the Engineer and may not be reproduced without permission and unless the reproduction carries their name. All designs and other information shown on this drawing are for the use on the specified project only and shall not be used otherwise without the written permission of the Engineer.

Written dimensions shall have precedence over scaled dimensions. Contractors shall verify and be responsible for all dimensions and conditions shown on the job and the Engineer shall be informed of any variations from the dimensions and conditions shown on the drawing. Shop drawings shall be submitted to the Engineer for approval prior to proceeding with fabrication.

Permit to Practice # 1003407
P.Eng. Permit

No.	DESCRIPTION	BY	DATE
	REVISIONS		
2	REVISION 1	GC	25-08-14
1	ISSUED FOR 90% REVIEW	GC	25-08-12

Project
DELEM DRIVE PUMP STATION

Title
CONCRETE SLABS AND PILE LAYOUT

Scale AS NOTED	Revision No.
Project No. 25116	
Drawn: PD	Drawing No.
Designed: PD	**S1.0**
Design Checked: GC Date 25-08-12	
Discipline Review: GC Date 25-08-12	

File Path

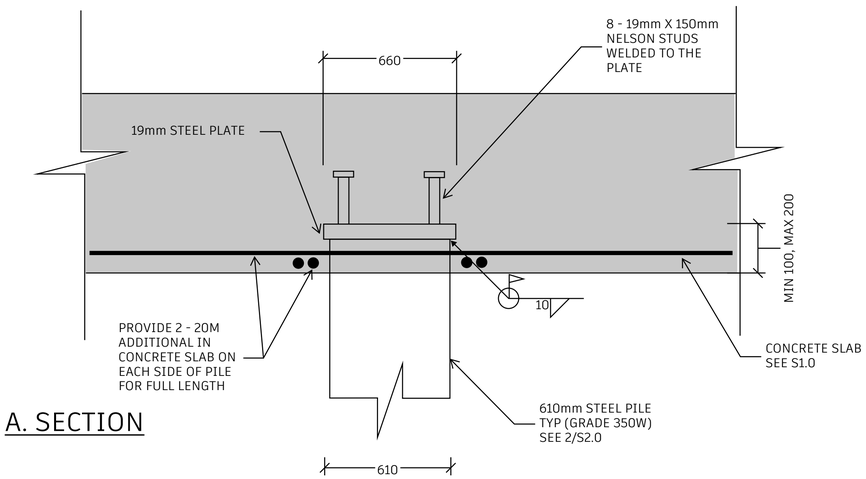

A. SECTION

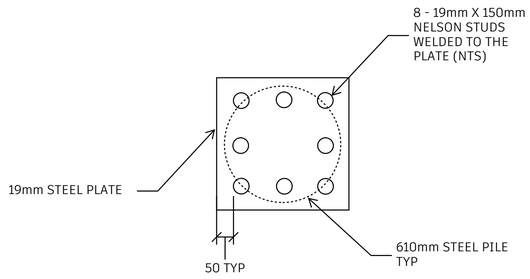

B. TOP VIEW

1. PILE CAP TYP DETAIL
(NTS)

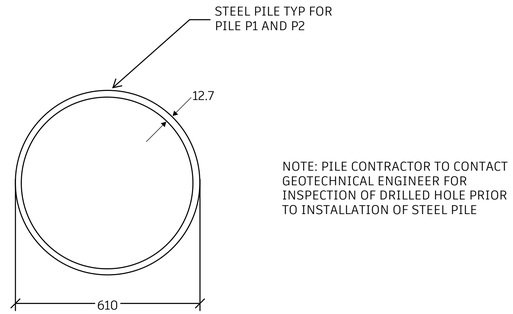

NOTE: PILE CONTRACTOR TO CONTACT GEOTECHNICAL ENGINEER FOR INSPECTION OF DRILLED HOLE PRIOR TO INSTALLATION OF STEEL PILE

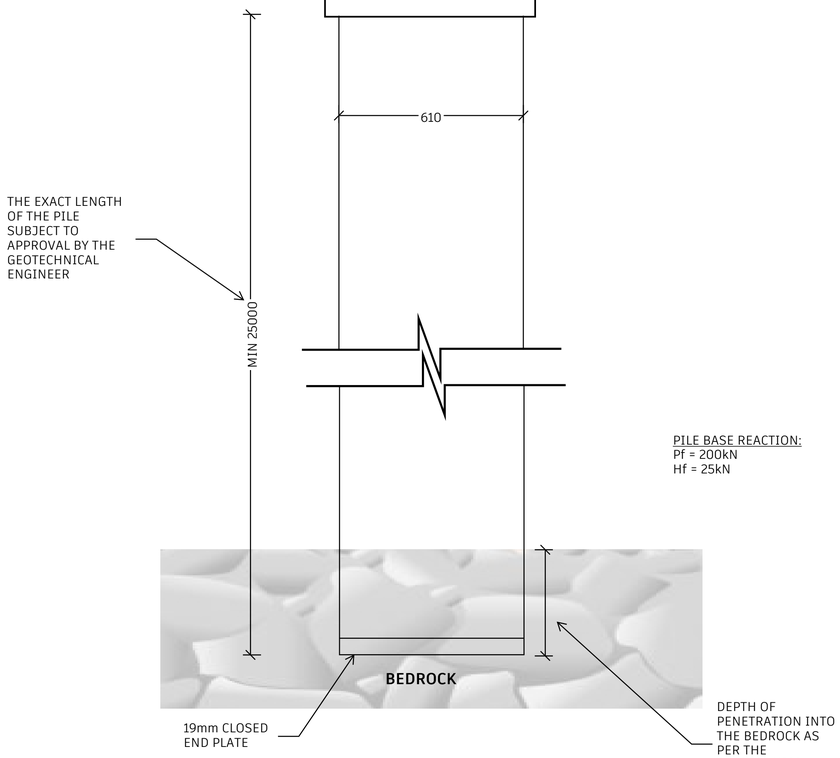

PILE BASE REACTION:
Pf = 200kN
Hf = 25kN

1. STEEL PILE TYP DETAIL
(1:10)

GC
Engineering
Victoria Office 778 533 9242
2148 Panaview Heights Victoria, BC V9M 1M2

Note
This drawing, as an instrument of service, is the property of the Engineer and may not be reproduced without permission and unless the reproduction carries their name. All designs and other information shown on this drawing are for the use on the specified project only and shall not be used otherwise without the written permission of the Engineer.

Written dimensions shall have precedence over scaled dimensions. Contractors shall verify and be responsible for all dimensions and conditions shown on the job and the Engineer shall be informed of any variations from the dimensions and conditions shown on the drawing. Shop drawings shall be submitted to the Engineer for approval prior to proceeding with fabrication.

Permit to Practice # 1003407
P.Eng. Permit

No.	DESCRIPTION	BY	DATE
2	REVISION 1	GC	25-08-14
1	ISSUED FOR 90% REVIEW	GC	25-08-12

REVISIONS

Project
DELEM DRIVE PUMP STATION

Title
PILE AND PILE CAP DETAIL

Scale AS NOTED	Revision No.
Project No. 25116	
Drawn: PD	Drawing No.
Designed: PD	S2.0
Design Checked: GC Date 25-08-12	
Discipline Review: GC Date 25-08-12	

File Path

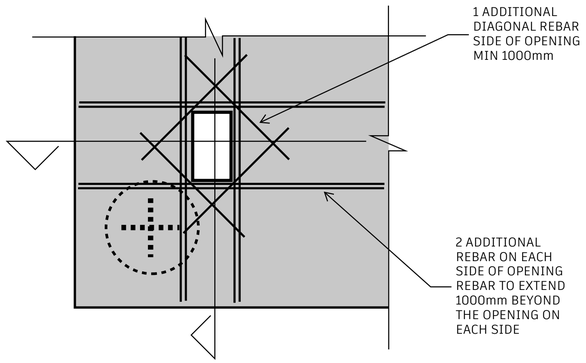

I. PARTIAL PLAN - ADDITIONAL TOP LAYER REBAR

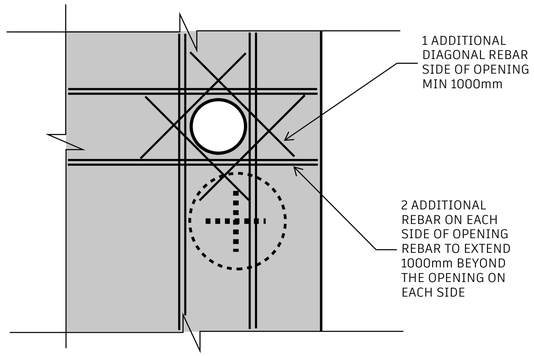

I. PARTIAL PLAN - ADDITIONAL TOP LAYER REBAR

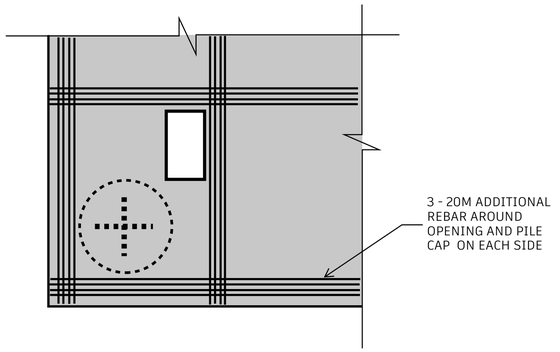

II. PARTIAL PLAN - ADDITIONAL BOT LAYER REBAR

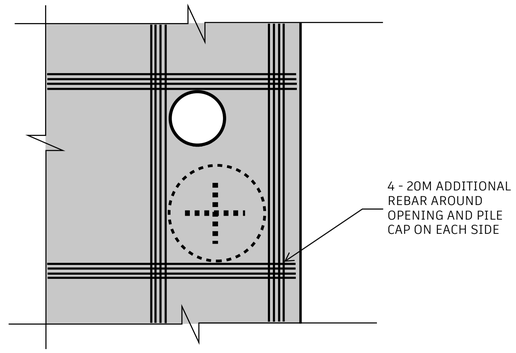

II. PARTIAL PLAN - ADDITIONAL BOT LAYER REBAR

1A. REBAR DETAIL AROUND OPENING 1
(1:20)

1B. REBAR DETAIL AROUND OPENING 2
(1:20)

GC
Engineering

Victoria Office 778 533 9242
2148 Panaview Heights Victoria, BC V9M 1M2

Note

This drawing, as an instrument of service, is the property of the Engineer and may not be reproduced without permission and unless the reproduction carries their name. All designs and other information shown on this drawing are for the use on the specified project only and shall not be used otherwise without the written permission of the Engineer.

Written dimensions shall have precedence over scaled dimensions. Contractors shall verify and be responsible for all dimensions and conditions shown on the job and the Engineer shall be informed of any variations from the dimensions and conditions shown on the drawing. Shop drawings shall be submitted to the Engineer for approval prior to preceeding with fabrication.

P.Eng. Permit

No.	DESCRIPTION	BY	DATE
2	REVISION 1	GC	25-08-14
1	ISSUED FOR 90% REVIEW	GC	25-08-12

REVISIONS

Project

DELEM DRIVE PUMP STATION

Title

SLAB OPENING REBAR DETAIL

Scale AS NOTED	Revision No.
Project No. 25116	
Drawn: PD	Drawing No.
Designed: PD	S3.0
Design Checked: GC Date 25-08-12	
Discipline Review: GC Date 25-08-12	

File Path

colquitz engineering

Appendix C

Handling Procedures for Fiberglass Pumping Stations

2378 Westlake Road
Kelowna, B.C. Canada
V1Z-2V2

BARSKI INDUSTRIES (1985) LTD.

Ph. # 250-769-6848
Fax # 250-769-6334
E-mail: barskiind@shaw.ca
Web: www.bcfiberglass.com

FIBERGLASS FABRICATORS

HANDLING PROCEDURES FOR FIBERGLASS PUMPING STATIONS

Removal of tank from transport trailer to temporary lay down in horizontal position

All typical FRP (Fiberglass Reinforced Plastic) pumping stations will arrive on site in a horizontal position on a low bed trailer. If the tank is not to be transitioned to the vertical position into its final location in the hole, then the lift should require only two nylon slings in a basket configuration. The slings should be placed at approximately 25% of the tank length from each end ensuring that the location of the slings does make contact with any nozzle penetrations. This may require a spreader bar or long cables from the lifting device to the nylon basket slings. A common practice is to place the sling basket on the back side of an external reinforcing rib. The station bottom is normally heavier than the top so the 2 sling basket placements can both be moved towards the bottom in order to provide a more balanced lift.

Once the tank is raised, it can be placed horizontally on the two cradles they were shipped with or have an on-site excavator create two sand or gravel piles which the tank can be lowered onto. In either case, the tank must be high enough off the ground so as not make any contact with any protruding nozzles or a chance of rolling over.

Transition of tank from horizontal to vertical position

This transition can only be done using a crane or excavator on the head end (top of station) which is capable of handling the entire weight of the tank to its final location. There are two lifting lugs located at the top most rib where a clevis can be used to join the sling to the lifting lug. Lift from this end will require a spreader bar or long slings to avoid severe rubbing of the shell by the slings during the transition. The slings can be fabric or steel but it is recommended that the steel slings use an appropriate spreader bar. At the bottom end of the tank, you will require either a tail crane or other lifting equipment such as an excavator or loader. This lifting equipment will be required to hook onto a fabric sling wrapped around the tank in a tight chocker fashion (one loop through the other) near the bottom portion of the tank. This chocker should be placed just below a bottom rib to eliminate slippage up the tank wall as it is being transitioned to vertical. Do not use the hold down lugs for this lift as they are designed for anchoring only. The lifting equipment simply has to hold the bottom off the ground while the main lift equipment raises the tank to its completely upright position. During this procedure the bottom lifter will need to advance as the tank is raised. This procedure can be completely reversed if for some reason the tank needs to be returned to the horizontal position. In some cases, providing the crane has two winch lines, a single crane can be used by having one main line on the head end while the other winch can hold the chocker sling on the bottom. This is easy to do if the tank is relatively short, less than 20’ in length

Other than the procedures detailed above, proper lifting and rigging practices should be used as should the safety considerations of each site. All equipment and rigging components shall be in good working condition and rated for the applicable loads.







General installation procedures

The following recommendations are based on Xylem Water Solutions experience and are in no way meant to replace the Engineer's instructions or specifications. They must be used in conjunction with the existing and anticipated conditions at the job site.

1. Use the lifting lugs provided for vertical handling
2. Use slings around the main tank for horizontal handling
3. Ensure unit is standing vertically on a level concrete pad
4. Bolt unit firmly and squarely in place, shim where necessary




5. Low section of the tank bottom to 150mm above lowest rib should be encased in concrete to provide additional anchorage
6. When external valves are mounted, support piping connections directly to the concrete pad
7. Maintain a dry site until backfill operations commence
8. Use a good quality screening, sand or pea gravel as backfill material
9. Place the backfill in equal increments not exceeding 300mm thick around the station to prevent unbalanced loads being imposed during backfill operations. Progressively tamp backfill around station to full height to reduce settlement to an absolute minimum.

colquitz engineering

Appendix D

Backfill Recommendations for Barski FRP Vertical Pump Stations

2378 Westlake Road
Kelowna, B.C. Canada
V1Z-2V2

BARSKI INDUSTRIES (1985) LTD.

Ph. # 250-769-6848
Fax # 250-769-6334
www.fiberglasspumpstations.com

MADE IN CANADA
FABRIQUE AU CANADA

FIBERGLASS FABRICATORS

Backfill Recommendations for Barski FRP Vertical Pump Stations

Primary Backfill Specification

(issued July 27, 2017)

FRP Vertical Tanks built by Barski Industries, must be installed with primary backfill material only, in all areas immediately surrounding the tank. This primary backfill material must extend at least 24" from the tank exterior on all sides. Acceptable materials for Primary Backfill are as follows:

Pea/Bird's eye Gravel

Round aggregate material not less than 1/8" and not greater than 3/4". Aggregate material must be clean, free flowing and free of all larger rocks, roots or any other organic materials.

Crushed Stone

Crushed stone or gravel with particle size not less than 1⁄8 " and not greater than 3/4". Material shall be clean and free flowing, free from large rocks, dirt, sand, roots or other organic materials.

NOTE: **All backfill material shall be free of ice and snow**. Backfill material shall not contain lumps of frozen material during installation.
If described backfill materials not meeting the Barski recommendations are not available, contact Barski Industries for information on alternate materials.
***Damage incurred due to improper backfill material will not be covered under warranty. ***

Secondary Backfill Specification

No Secondary Backfill may be placed closer than 24", from sides of any tank. The following are approved materials for Secondary Backfill.

Coarse Gravel or Sand

Coarse gravel or sand with rocks no larger than 2". Backfill shall be clean and free flowing, free from dirt, clay, fine sand, roots or other organic materials. During backfill this material must be compacted to 95% compaction.

Native Backfill

Clean native backfill, or clean selected backfill, containing rocks no larger than 2". This material must be compacted to 95% compaction. This backfill material shall be of the such quality that it exhibits an ultimate bearing strength in excess of 170 kPa (3500 lbs per square foot) in the compacted state.

For further information with respect to these recommendations, contact a Barski Industries representative.

TECHNICAL MEMORANDUM

DATE October 9, 2025

Reference No. CA0051793.7685-004-TM-RevA

TO Catherine Laurie, A ScT
West Shore Environmental Services

CC

FROM Don Kaluza

EMAIL donald.kaluza@wsp.com

DELEM DRIVE PUMP STATION

GEOTECHNICAL COMMENTS ON CONSTRUCTION SEQUENCING

WSP Canada Inc. (WSP) is pleased to provide West Shore Environmental Services (WSES) with this technical memorandum as it pertains to construction sequencing associated with the proposed Delem Drive Pump Station in Langford, BC.

1 PURPOSE AND PROJECT INFORMATION

Based on drawings provided by Colquitz Engineering (dated 2025-06-23), the proposed pump station consists of a genset and control kiosk that will rest atop a concrete slab on grade that is supported on piles socketed into bedrock. The concrete slab has dimensions of about 7m in length, by 4.5m in width, by 600mm thick. A wet well will be located approximately 1.5m north of the kiosk slab and buried utilities will connect between the wet well and kiosk. The 3.05m diameter wet well will rest atop a 600mm thick concrete slab buried about 5.5m below grade. The concrete slab will also be supported on piles socketed into bedrock.

The ground conditions in the Delem Drive area are geotechnically challenging and consists of about 1.0m of sand and gravel fill, overlying about 2.0m of silty sand fill, overlying 2.5 to 3.0m of peat, overlying about 14m of soft compressible clay, overlying sandy silt/clayey sand, overlying bedrock, which is about 24.5m below existing grade. The lower approximate 1.0m of the silty sand fill is mixed with organics, which presumably occurred as part of the preloading of Delem Drive road development. Adjacent to Delem Drive to the east, lies natural undisturbed peat which is approximately 2m below the existing grade of Delem Drive.

The proposed pump station system will raise grades approximately 0.5m above existing road grade and will extend fill outward to the east up to about 5m over the natural undisturbed peat which has not been subject to preloading. Electrical conduits are proposed to be placed east of the wet well where an electrical conduit and light standard are proposed. The area of the proposed electrical conduits and the area between the kiosk and wet well are settlement sensitive. A plan showing the details of the proposed pump station system is shown on Figure 1.

To remove or reduce the amount of primary consolidation settlement that the additional fill load will have on the non-loaded peat, WSP is proposing to use cellular concrete as lightweight fill to balance out the load where there are settlement sensitive areas.

WSP Canada Inc.
840 Howe Street, #1000, Vancouver, British Columbia, V6Z 2M1, Canada
T: +1 604 685 9381

DRAFT

Given the challenging conditions, the following sections provide WSP's expectations on construction methodology and sequencing. This sequencing is not to be considered as definitive, and WSP will work with the contractor to meet objectives of the overall design.

2 CONSTRUCTION SEQUENCING

2.1 Rock Fill

The pump station system will require additional fill to extend east overtop of undisturbed natural peat deposits. Except for connections between the kiosk and the wet well, and the area of proposed electrical conduits, we understand that settlements due to additional fill can be managed through a maintenance program, which could go on for several years after construction. To minimize the amount of settlement in settlement sensitive areas and reduce future maintenance due to placement of additional rockfill, WSP recommends that the rockfill in the natural undisturbed areas be placed first to allow time for some of the primary consolidation settlement to take place. Area 1 on Figure 1 reference areas where rockfill should be placed first.

2.2 Wet Well Temporary Excavation

The proposed wet well will require an excavation in the order of 6m below existing grade. An excavation of this depth will encounter relatively high groundwater, fill, silty soils, and peat. Based on our experience with excavations to similar depths in the same peat deposit on the Finney Road extension, the excavation side slopes became unstable below the groundwater level (see photos below). Given that the concrete base of the wet well is about 4.4m by 4.4m in plan, an open cut excavation without some form of shoring would need to be in the order of 15m to 25m square in plan with some form of temporary dewatering to maintain a temporary safe excavation. An excavation of this size would remove most if not all the newly constructed Delem Drive and would require a significantly greater amount of backfill. To maintain a relatively narrow excavation, WSP envisions that the wet well would be constructed through temporary excavation support such as sheet piles either driven or vibrated into the underlying clay. The contractor who is awarded the work is typically responsible for the design of temporary excavation and groundwater management, however, WSP could prepare a feasibility design, or work with the contractor to complete the temporary design, if requested. Area 2 on Figure 1 represents the approximate extents of the temporary excavation support for the wet well.

Sequencing of the pile installation for the wet well will need to be considered. WSP envisions that the piles would either be installed from the current surface and then cut off at the design elevation, or pile installation equipment be lowered into the temporary excavation near the design elevation. If the former, then the piles for the kiosk and wet well would be installed at the same time from the surface. If the latter, the material within the temporary excavation would need to be removed and the base of the excavation stabilized to support the piling equipment. Details of the stabilization material and thickness will depend on the contractor's equipment, but WSP would envision that the material would consist of a thick layer of angular rockfill, such as a 150mm minus potentially reinforced with geogrid or geotextile, to stabilize the base.

Groundwater will be close to the natural surrounding grade and localized temporary dewatering (typically designed by the Contractor) will be required to keep the excavation dry for construction of the concrete slab and installation of the wet well.

Depending on the workspace needed to construct the concrete slab and wet well, there will be a space between the temporary excavation support and the components of the wet well. If granular material is used for this purpose, the material will have little horizontal support by the softer adjacent peat and would push outward into the surrounding peat once the temporary support is removed. This would create localized settlement at the surface around the wet well after construction. Ideally, this space should be backfilled with concrete that is stiff enough to support itself once the temporary support is removed. Alternatively, the temporary support could be left in place but this should be discussed with the client and the City.



Construction photos from Finney Road Extension (2018-07-25)

2.3 Cellular Concrete

Although the main elements of the pump station will be supported by piles to bedrock, there will be differential settlement in the area between the pile supported wet well and the pile supported kiosk where connections, and future utilities and infrastructure may be located. To minimize the primary consolidation of the undisturbed areas and where additional fill is being proposed, lightweight fill such as cellular concrete should be considered. This will apply to the area between the kiosk and wet well where there will be connections between the two structures, and where proposed electrical conduits are proposed on the east side of the wet well. This is shown as Area 3 on Figure 1.

The thickness of the cellular concrete will depend on the density of the concrete and the buoyant unit weight of the material that is being removed. Cematrix™, is a cellular concrete that was used for backfill near the intersection of Finney Road and Sooke Road has a standard wet density of 475 kg/m^3 would be suitable for this purpose. A 2m thick layer of Cematrix (475) would be required to balance the load where new fill is placed (i.e., where Delem Drive had not previously been preloaded). WSP envisions that this 2m comprise of 1m excavation of the existing silty sand fill, and 1m into the fill that is to be placed above. Based on experience working on Finney Road, an excavation of 1m depth could be managed by local sumps and pumps.

Note that Cematrix and other cellular concrete, will need to be placed in lifts defined by the manufacturer. Some site preparation and formwork will be required where the Cemetrix is placed above the natural grade elevation. The contractor should contact the supplier of the cellular concrete to be aware of site preparation and placement details.

The approximate extent of the Cematrix is shown as Area 3 on Figure 1, and in Section on Figure 2.

2.4 Gen Set Piles

An addition to the above considerations, the placement of rock fill immediately adjacent to the genset piles will result in settlements. The piles should not be installed in this area until the primary consolidation triggered by the rock filling is complete (Area 1 on Figures 1 and 3). If piles are installed before the primary consolidation is complete, the settlements will result in down drag on the piles, and more critically induce lateral displacements which could damage the piles.

The Contractor will need to develop a detailed works plan of construction methods and sequencing before starting work. This plan must be reviewed by WSP before starting work, to ensure that the means and methods of construction do not compromise the performance of the final construction.

3 FIELD REVIEWS

WSP anticipates that we would be on site during construction to verify our design expectations. The extent of the field reviews will depend on the contractor's methodology, but in general, WSP will need to be on site for:

- Review of subgrade conditions prior to placement of any fill materials (including cellular concrete).
- Review of materials to be placed, and the placement of fill materials.
- Review during pile installations.

4 CLOSING

This information is provided in accordance with our contract with West Shore Environmental Services. Should you have any comments or questions, please contact the undersigned at your convenience.

WSP Canada Inc.

Don Kaluza, P.Eng., P.Eng.
Senior Principal Geotechnical Engineer

Stewart Dolan, P.Eng.
Senior Geotechnical Engineer

DK/SD/cdg

Attachments: Figures 1 to 3

https://wsponlinecan.sharepoint.com/sites/ca-ca0051793.7685/shared documents/06. deliverables/3.0_issued/ca0051793.7685-004-tm-reva/ca0051793.7685-004-tm-reva-construction tech memo-09oct_25.docx

IMPORTANT INFORMATION AND LIMITATIONS OF THIS REPORT

Standard of Care: WSP Canada Inc. (WSP) has prepared this report in a manner consistent with that level of care and skill ordinarily exercised by members of the engineering and science professions currently practising under similar conditions in the jurisdiction in which the services are provided, subject to the time limits and physical constraints applicable to this report. No other warranty, expressed or implied is made.

Basis and Use of the Report: This report has been prepared for the specific site, design objective, development and purpose described to WSP by the Client. The factual data, interpretations and recommendations pertain to a specific project as described in this report and are not applicable to any other project or site location. Any change of site conditions, purpose, development plans or if the project is not initiated within eighteen months of the date of the report may alter the validity of the report. WSP can not be responsible for use of this report, or portions thereof, unless WSP is requested to review and, if necessary, revise the report.

The information, recommendations and opinions expressed in this report are for the sole benefit of the Client. No other party may use or rely on this report or any portion thereof without WSP's express written consent. If the report was prepared to be included for a specific permit application process, then upon the reasonable request of the client, WSP may authorize in writing the use of this report by the regulatory agency as an Approved User for the specific and identified purpose of the applicable permit review process. Any other use of this report by others is prohibited and is without responsibility to WSP. The report, all plans, data, drawings and other documents as well as all electronic media prepared by WSP are considered its professional work product and shall remain the copyright property of WSP, who authorizes only the Client and Approved Users to make copies of the report, but only in such quantities as are reasonably necessary for the use of the report by those parties. The Client and Approved Users may not give, lend, sell, or otherwise make available the report or any portion thereof to any other party without the express written permission of WSP. The Client acknowledges that electronic media is susceptible to unauthorized modification, deterioration and incompatibility and therefore the Client cannot rely upon the electronic media versions of WSP's report or other work products.

The report is of a summary nature and is not intended to stand alone without reference to the instructions given to WSP by the Client, communications between WSP and the Client, and to any other reports prepared by WSP for the Client relative to the specific site described in the report. In order to properly understand the suggestions, recommendations and opinions expressed in this report, reference must be made to the whole of the report. WSP can not be responsible for use of portions of the report without reference to the entire report.

Unless otherwise stated, the suggestions, recommendations and opinions given in this report are intended only for the guidance of the Client in the design of the specific project. The extent and detail of investigations, including the number of test holes, necessary to determine all of the relevant conditions which may affect construction costs would normally be greater than has been carried out for design purposes. Contractors bidding on, or undertaking the work, should rely on their own investigations, as well as their own interpretations of the factual data presented in the report, as to how subsurface conditions may affect their work, including but not limited to proposed construction techniques, schedule, safety and equipment capabilities.

Soil, Rock and Groundwater Conditions: Classification and identification of soils, rocks, and geologic units have been based on commonly accepted methods employed in the practice of geotechnical engineering and related disciplines. Classification and identification of the type and condition of these materials or units involves judgment, and boundaries between different soil, rock or geologic types or units may be transitional rather than abrupt. Accordingly, WSP does not warrant or guarantee the exactness of the descriptions.

Special risks occur whenever engineering or related disciplines are applied to identify subsurface conditions and even a comprehensive investigation, sampling and testing program may fail to detect all or certain subsurface conditions. The environmental, geologic, geotechnical, geochemical and hydrogeologic conditions

that WSP interprets to exist between and beyond sampling points may differ from those that actually exist. In addition to soil variability, fill of variable physical and chemical composition can be present over portions of the site or on adjacent properties. **The professional services retained for this project include only the geotechnical aspects of the subsurface conditions at the site, unless otherwise specifically stated and identified in the report.** The presence or implication(s) of possible surface and/or subsurface contamination resulting from previous activities or uses of the site and/or resulting from the introduction onto the site of materials from off-site sources are outside the terms of reference for this project and have not been investigated or addressed.

Soil and groundwater conditions shown in the factual data and described in the report are the observed conditions at the time of their determination or measurement. Unless otherwise noted, those conditions form the basis of the recommendations in the report. Groundwater conditions may vary between and beyond reported locations and can be affected by annual, seasonal and meteorological conditions. The condition of the soil, rock and groundwater may be significantly altered by construction activities (traffic, excavation, groundwater level lowering, pile driving, blasting, etc.) on the site or on adjacent sites. Excavation may expose the soils to changes due to wetting, drying or frost. Unless otherwise indicated the soil must be protected from these changes during construction.

Sample Disposal: WSP will dispose of all uncontaminated soil and/or rock samples 90 days following issue of this report or, upon written request of the Client, will store uncontaminated samples and materials at the Client's expense. In the event that actual contaminated soils, fills or groundwater are encountered or are inferred to be present, all contaminated samples shall remain the property and responsibility of the Client for proper disposal.

Follow-Up and Construction Services: All details of the design were not known at the time of submission of WSP's report. WSP should be retained to review the final design, project plans and documents prior to construction, to confirm that they are consistent with the intent of WSP's report.

During construction, WSP should be retained to perform sufficient and timely observations of encountered conditions to confirm and document that the subsurface conditions do not materially differ from those interpreted conditions considered in the preparation of WSP's report and to confirm and document that construction activities do not adversely affect the suggestions, recommendations and opinions contained in WSP's report. Adequate field review, observation and testing during construction are necessary for WSP to be able to provide letters of assurance, in accordance with the requirements of many regulatory authorities. In cases where this recommendation is not followed, WSP's responsibility is limited to interpreting accurately the information encountered at the borehole locations, at the time of their initial determination or measurement during the preparation of the Report.

Changed Conditions and Drainage: Where conditions encountered at the site differ significantly from those anticipated in this report, either due to natural variability of subsurface conditions or construction activities, it is a condition of this report that WSP be notified of any changes and be provided with an opportunity to review or revise the recommendations within this report. Recognition of changed soil and rock conditions requires experience and it is recommended that WSP be employed to visit the site with sufficient frequency to detect if conditions have changed significantly.

Drainage of subsurface water is commonly required either for temporary or permanent installations for the project. Improper design or construction of drainage or dewatering can have serious consequences. WSP takes no responsibility for the effects of drainage unless specifically involved in the detailed design and construction monitoring of the system.

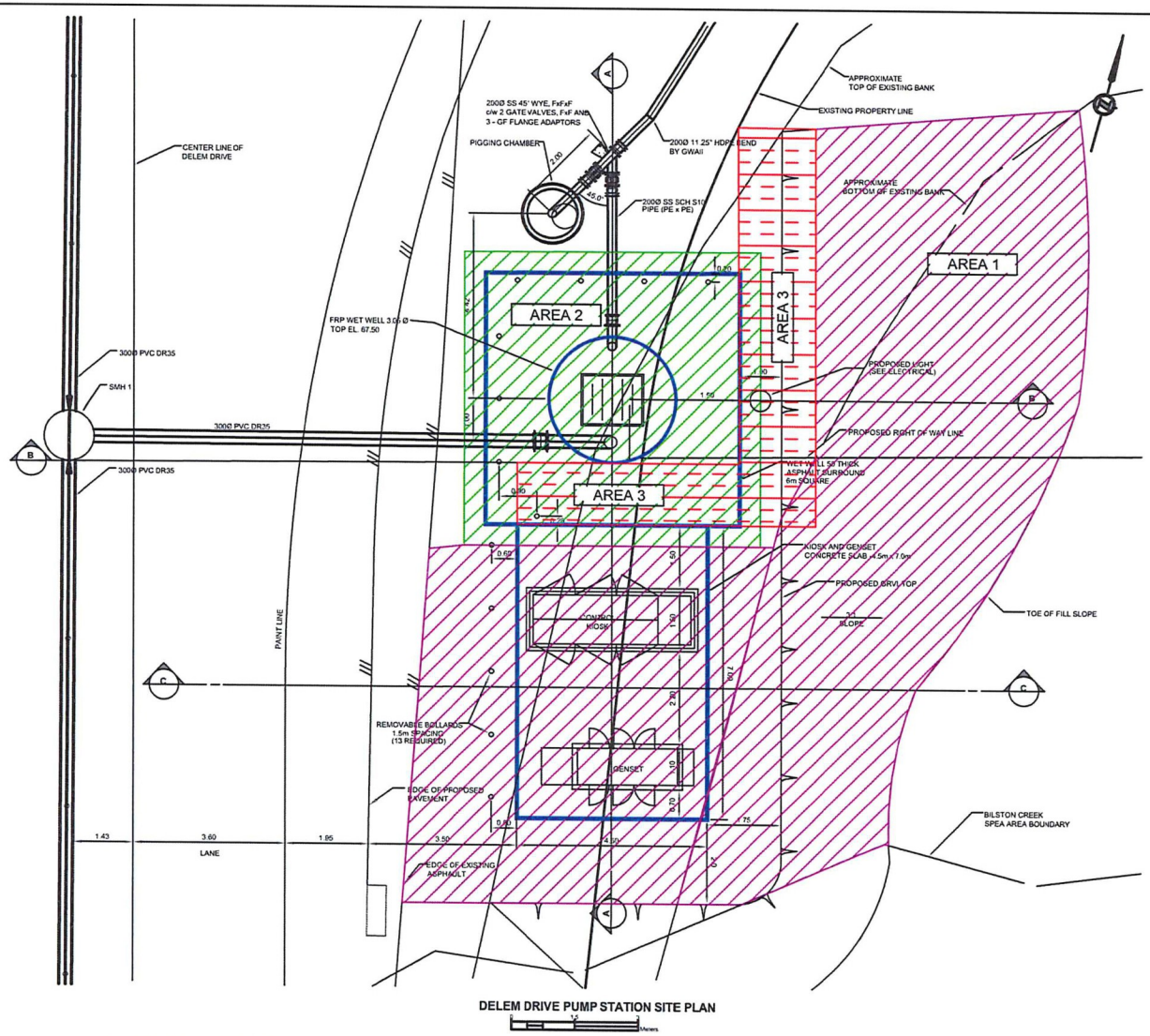

DELEM DRIVE PUMP STATION SITE PLAN

0 2.5 5 Meters

BASED PLAN PROVIDED BY COLQUITZ ENGINEERING

TO BE READ IN CONJUNCTION WITH WSP TECHNICAL MEMO DATED 8 OCTOBER 2025

DISCLAIMER:
THIS DRAWING AND DESIGN IS COPYRIGHT PROTECTED WHICH SHALL NOT BE USED, REPRODUCED OR REVISED WITHOUT WRITTEN PERMISSION BY WSP. THE CONTRACTOR SHALL CHECK AND VERIFY ALL DIMENSIONS AND UTILITY LOCATIONS AND REPORT ALL ERRORS AND OMISSIONS PRIOR TO COMMENCING WORK.

COPYRIGHT:

REVISION:

REV	DATE	DESCRIPTION	BY
0A	2025-10-08	ISSUED FOR CLIENT REVIEW	DEK

wsp
301-3600 Uptown BLVD, Victoria, BC, V8Z 0B9
T 250-384-5510 | www.wsp.com

PROJECT NO: CA0051793.7685

SCALE:	AS SHOWN
DATE:	2025-10-06
DESIGNED BY:	DEK
DRAWN BY:	DEK
CHECKED BY:	SD

PROJECT: DELEM DRIVE PUMP STATION
GEOTECHNICAL COMMENTS ON CONSTRUCTION SEQUENCING

CLIENT: WEST SHORE ENVIRONMENTAL SERVICES

TITLE: SITE PLAN

DRAWING: 00

C:\Cerego\DCA0051793.7685_Delem_Drive\Memo\Construction Memo\Sequencing Aug. Oct 09, 2025 2:06pm BY: Duraid Kaloul

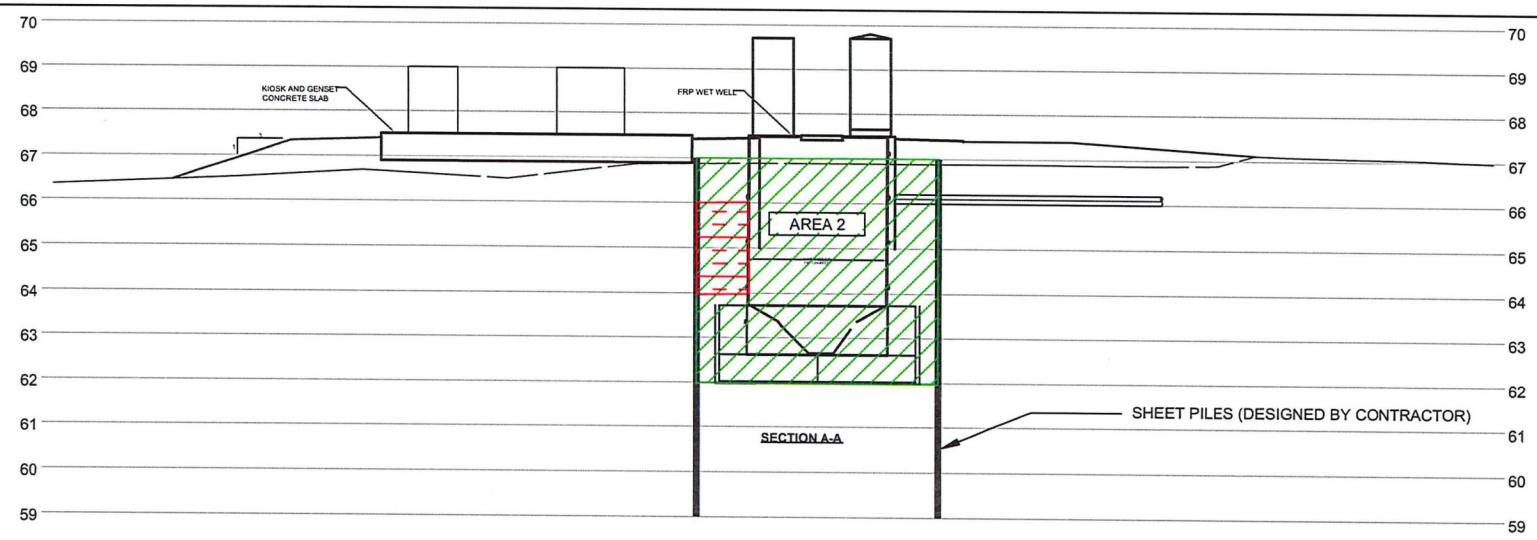

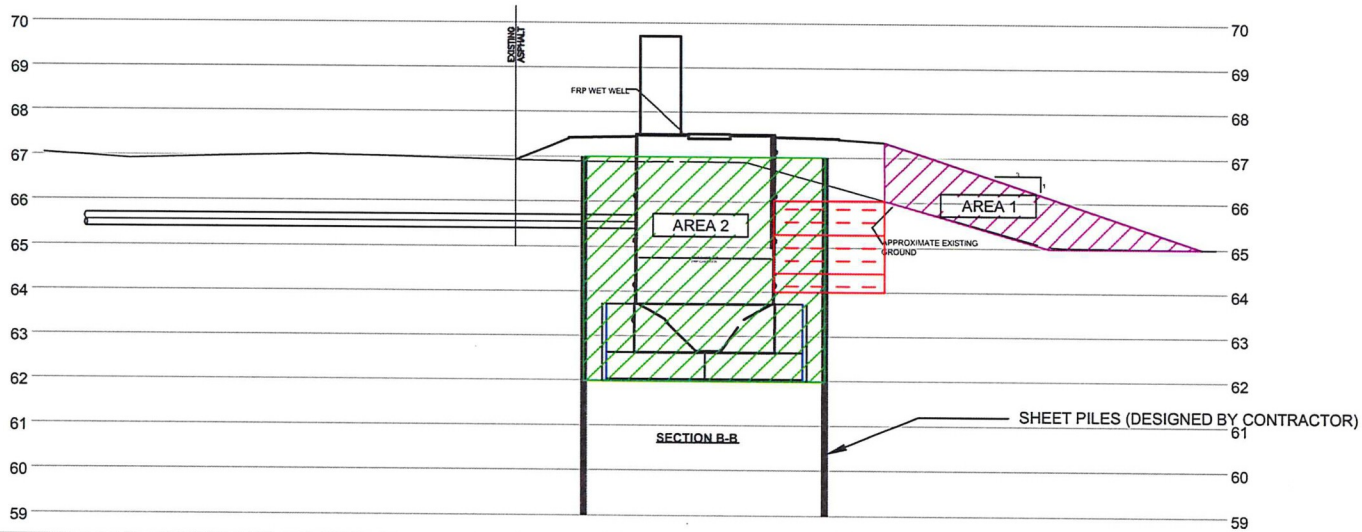

BASED PLAN PROVIDED BY COLQUITZ ENGINEERING

TO BE READ IN CONJUNCTION WITH WSP TECHNICAL MEMO DATED 8 OCTOBER 2025

DISCLAIMER:
THIS DRAWING AND DESIGN IS COPYRIGHT PROTECTED WHICH SHALL NOT BE USED, REPRODUCED OR REVISED WITHOUT WRITTEN PERMISSION BY WSP. THE CONTRACTOR SHALL CHECK AND VERIFY ALL DIMENSIONS AND UTILITY LOCATIONS AND REPORT ALL ERRORS AND OMISSIONS PRIOR TO COMMENCING WORK.
COPYRIGHT:

REVISION:

REV	DATE	DESCRIPTION	BY
0A	2025-10-08	ISSUED FOR CLIENT REVIEW	DEK

301-3600 Uptown BLVD, Victoria, BC, V8Z 0B9
T 250-384-5510 | www.wsp.com

PROJECT NO: CA0051793.7685

SCALE:	AS SHOWN
DATE:	2025-10-08
DESIGNED BY:	DEK
DRAWN BY:	DEK
CHECKED BY:	SD

PROJECT: DELEM DRIVE PUMP STATION
GEOTECHNICAL COMMENTS ON CONSTRUCTION SEQUENCING

CLIENT: WEST SHORE ENVIRONMENTAL SERVICES

TITLE: SECTIONS A-A AND B-B

DRAWING: 00

C:\Comp\D\CA0051793.7685_Delem_Drive\Memo\Construction Memo\Sequencing Aug. Oct 09, 2025-2.1\pm BY (Donald.Kaluza)

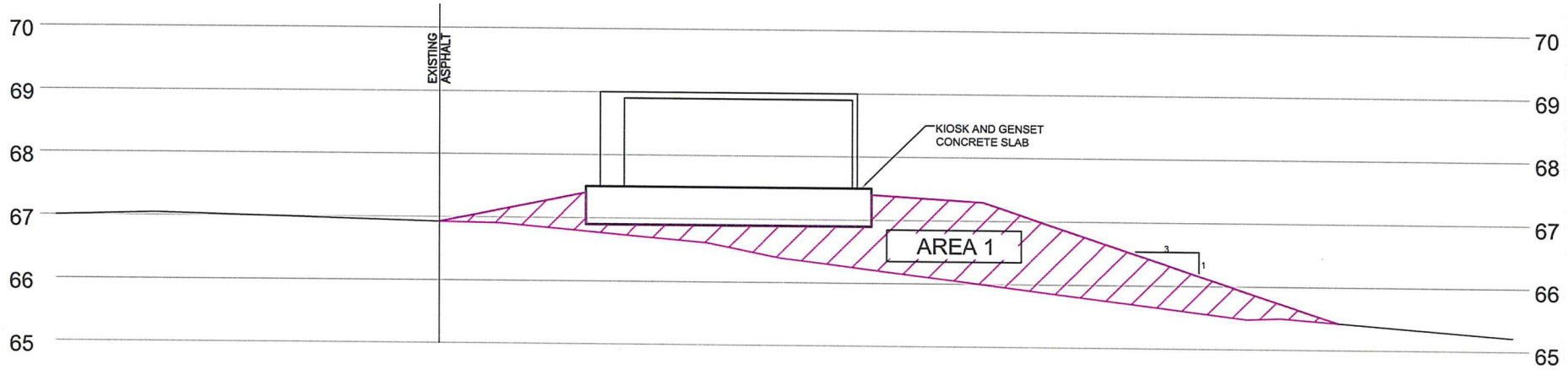

SECTION C-C

BASED PLAN PROVIDED BY COLQUITZ ENGINEERING
TO BE READ IN CONJUNCTION WITH WSP TECHNICAL MEMO DATED 8 OCTOBER 2025

DISCLAIMER:
THIS DRAWING AND DESIGN IS COPYRIGHT PROTECTED WHICH SHALL NOT BE USED, REPRODUCED OR REVISED WITHOUT WRITTEN PERMISSION BY WSP. THE CONTRACTOR SHALL CHECK AND VERIFY ALL DIMENSIONS AND UTILITY LOCATIONS AND REPORT ALL ERRORS AND OMISSIONS PRIOR TO COMMENCING WORK.
COPYRIGHT:

REVISION:

REV	DATE	DESCRIPTION	BY
0A	2025-10-08	ISSUED FOR CLIENT REVIEW	DEK

wsp
301-3600 Uptown BLVD, Victoria, BC, V8Z 0B9
T 250-384-5510 | www.wsp.com

PROJECT NO: CA0051793.7685

SCALE:	AS SHOWN
DATE:	2025-10-08
DESIGNED BY:	DEK
DRAWN BY:	DEK
CHECKED BY:	SD

PROJECT: DELEM DRIVE PUMP STATION
GEOTECHNICAL COMMENTS ON CONSTRUCTION SEQUENCING

CLIENT: WEST SHORE ENVIRONMENTAL SERVICES

TITLE: SECTION C - C

DRAWING: 00

C:\Cerapro\CA0051793.7685_Delem_Dive\Memo\Construction Memo\Sequencing.dwg 0x19 2025-10-pm BY (DonaldKaluza)

WAYPOINT
ENVIRONMENTAL SERVICES

Construction Environmental Management Plan; Delem Drive Sanitary Sewage Pump Station

3103 Delem Drive
Langford, BC

Prepared for:

West Shore Environmental Services LP
c/o Catherine Laurie
103-859 Orono Avenue,
Victoria, BC, V9B2T9

May 29, 2026

Written By:

Rebecca Cheyne, B.Sc., P.Ag
Project Environmental Scientist

Reviewed By:

Ryan Black, P.Eng., RPBio
Principal Environmental Engineer

WAYPOINT ENVIRONMENTAL SERVICES

TABLE OF CONTENTS

1.0 INTRODUCTION 3
1.1 Background 3
1.2 Objective 3
1.3 Construction Works 4
2.0 SITE DESCRIPTION 5
3.0 REGULATORY FRAMEWORK 7
4.0 BEST MANAGEMENT PRACTICES 8
5.0 ENVIRONMENTAL ROLES AND RESPONSIBILITIES 8
6.0 ENVIRONMENTAL MONITORING 10
6.1 Environmental Monitor Role 10
6.2 Monitoring Frequency 10
6.3 Reporting 11
7.0 ENVIRONMENTAL PROTECTION MEASURES 11
7.1 Erosion and Sediment Controls 11
7.1.1 Stormwater Management Plan 11
7.2 Vegetation and Riparian Protection 12
7.3 Wildlife and Nesting Birds 12
7.4 Spill Prevention and Response 13
7.5 Waste Management 13
8.0 SITE ACCESS AND STAGING 13
9.0 SPILL PREVENTION AND RESPONSE 14
9.1 Spill Prevention Measures 14
9.2 Spill Response Procedure 14
9.3 Spill Reporting 16
10.0 ADAPTIVE MANAGEMENT AND CONTINUOUS IMPROVEMENT 16
11.0 REFERENCES 17
12.0 LIMITATIONS AND CONDITIONS 18

WAYPOINT ENVIRONMENTAL SERVICES

APPENDICIES

Appendix A – Previous Reports
Appendix B – Drawings
Appendix C – Site Photographs

WAYPOINT
ENVIRONMENTAL SERVICES

1.0 INTRODUCTION

This report presents a Construction Environmental Monitoring Plan (CEMP) outlining the planned work procedures and mitigation measures, including methods, equipment, and approaches, to be implemented during the proposed activities. The CEMP has been prepared for 3103 Delem Drive, Langford, British Columbia (BC) (Site). Waypoint Environmental Services Ltd., (WES) was retained by West Shore Environmental Services LP c/o Catherine Laurie (Client) to prepare this CEMP prior to the installation of a sanitary sewage pump station on the Site (Construction Works).

1.1 Background

A Riparian Area Protection Regulation (RAPR) assessment was previously completed in 2018 (Cascadia, 2018) for the larger Centre Mountain Industrial development, which included a Water Sustainability Act (WSA) Section 11 authorization for construction of a bridge over Bilston Creek. The bridge incorporates sanitary sewer and other utilities beneath the deck.

The previously approved Riparian Area Assessment (RAA) and WSA authorization have since expired. The current work involves installation of a sanitary pump station to connect to the existing sewer main located on the bridge. No in-water works are proposed.

An updated, site-specific RAPR assessment is being prepared to address the current scope of works and this section of Bilston Creek and will be submitted to the Province.

The previous RAA and WSA are included in **Appendix A**

1.2 Objective

The purpose of this CEMP is to outline the environmental protection measures, best management practices (BMPs), and monitoring requirements to be implemented during construction of the proposed sanitary pump station.

Key components of the CEMP for managing risks to natural resources include:

- Regulatory Compliance: identification of applicable environmental regulations and confirmation that all Construction Works will be conducted in accordance with these requirements.
- Roles and Responsibilities: clear delineation of responsibilities among the Client, Environmental Monitor (EM)/Qualified Environmental Professional (QEP), contractors, and subcontractors to ensure proper implementation and adherence to the CEMP.

- Mitigation Measures and BMPs: specification of mitigation strategies, BMPs, Erosion and Sediment Controls (ESC) and environmental procedures to guide the execution of Construction Works.
- Environmental Monitoring: ongoing monitoring to verify compliance with the regulatory requirements, mitigation measures, ESCs and BMPs outlined in the CEMP.

1.3 Construction Works

The project involves construction of a sanitary pump station to service the new Centre Mountain Industrial development. The station will tie into the existing sanitary sewer main located beneath the Bilston Creek bridge. As part of the proposed works, a sewer extension along Delem Drive, underneath the existing asphalt, will be constructed in conjunction with the pump station.

No construction works will occur within the SPEA, the wetted channel or banks of the creek.

The works will generally include:

- Excavation to a depth of approximately 5.0 m below ground surface (bgs) to achieve the design grade for the sanitary connection and installation of the wet well structure. Excavation dimensions are anticipated to accommodate the fiberglass reinforced plastic (FRP) wet well, valve chamber, and associated piping.
- Construction of a reinforced concrete base slab, wet well, and valve chamber as shown in design drawings (**Appendix B**).
- Installation of mechanical and electrical components including submersible pumps, piping, valves, control panels, and associated appurtenances.
- Pile driving and sheet piling/shoring.
- Asphalt removal and trenching along Delem Drive to install a stretch of new sanitary sewer between the pump station and the existing sanitary pipe terminus from the previous phase of work.
- Remove existing vertical riser on the sanitary pipe terminus and connect the new portion of the sewer line and pump station.
- Use of heavy equipment, including but not limited to a crane truck for setting major components, tandem dump trucks for removal of spoil material, and flatbed trucks for delivery of prefabricated and structural elements.
- Placement of 19 mm gravel to complete the pad area around the pump station and access zone.
- Resurfacing of Delem Drive with asphalt following sewer installation.

- Restoration of disturbed slopes with topsoil and hydroseed to re-establish vegetation and reduce erosion risk.

All construction works will be carried out in accordance with the environmental protection measures outlined in this CEMP and BMPs.

2.0 SITE DESCRIPTION

The proposed pump station will be constructed at 3103 Delem Drive, located at the east corner of Delem Drive and Sooke Road in Langford, BC. The Site is within the municipal service area for the new Centre Mountain Industrial development.

The work area is situated adjacent to Bilston Creek. The existing Bilston Creek bridge, located immediately south of the Site, contains the sanitary sewer main that will be connected to the new pump station via the newly installed sewer connection.

The Pump Station Site is currently a partially cleared gravel area with vegetated slopes leading toward Bilston Creek. The Sewer connection Site will be completed along Delem Drive which is an asphalt roadway Site photos are included in **Appendix C**. Access will be from Delem Drive, with construction equipment and materials staged within the existing disturbed footprint to the extent practicable to minimize environmental impacts.

Table 2.0.1 Site Details

The Site Location and Site Plan can be referenced in **Figures 1 and 2** below.

Location	3103 Delem Drive, Langford. BC (Corner of Delem Drive and Sooke Road)
PID	030-827-353
GPS Coordinates	48°25'22.52"North Latitude, -123°33'17.95"East Longitude
Elevation	Approximately 66 metres (m) above sea level

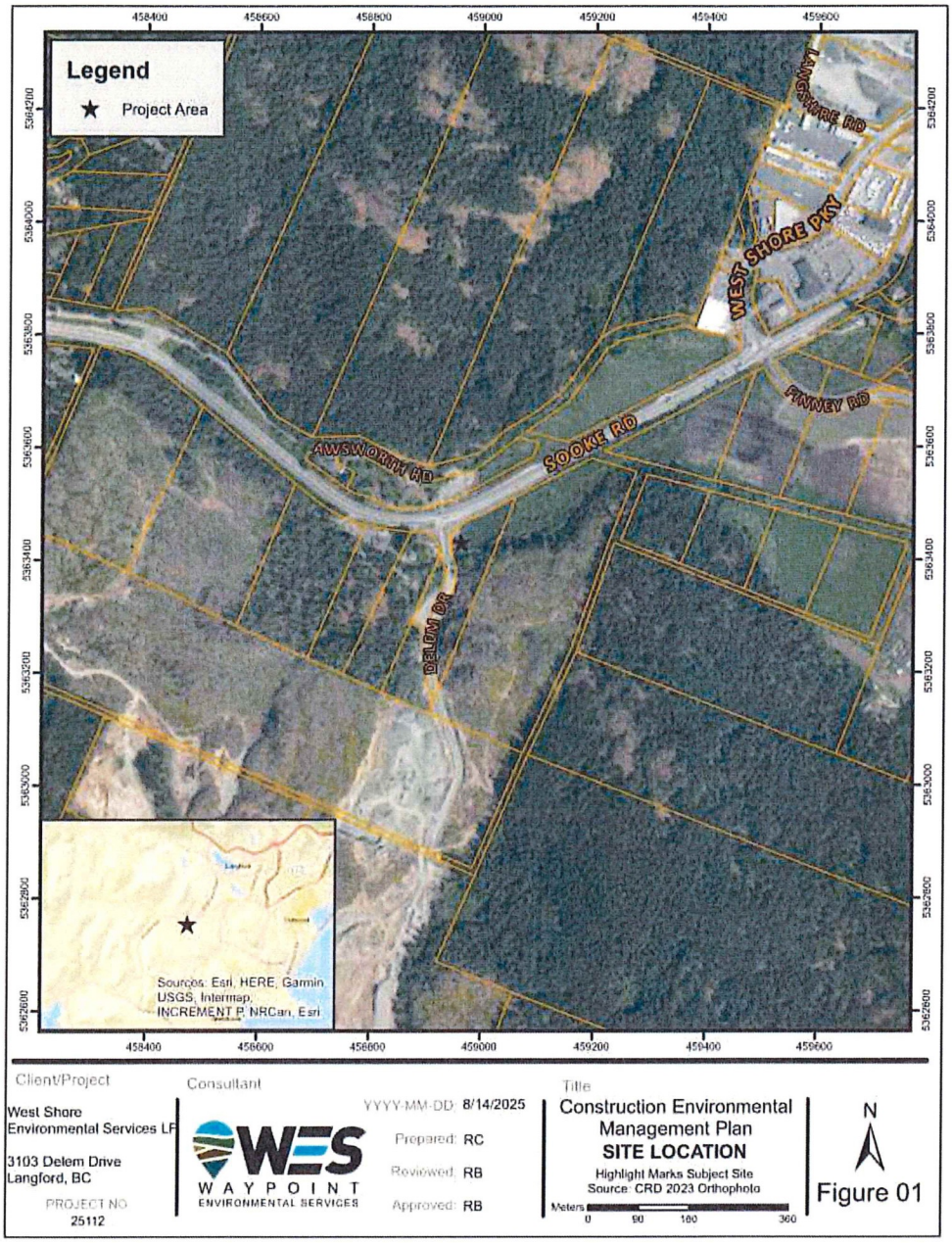

Figure 1: Site Location

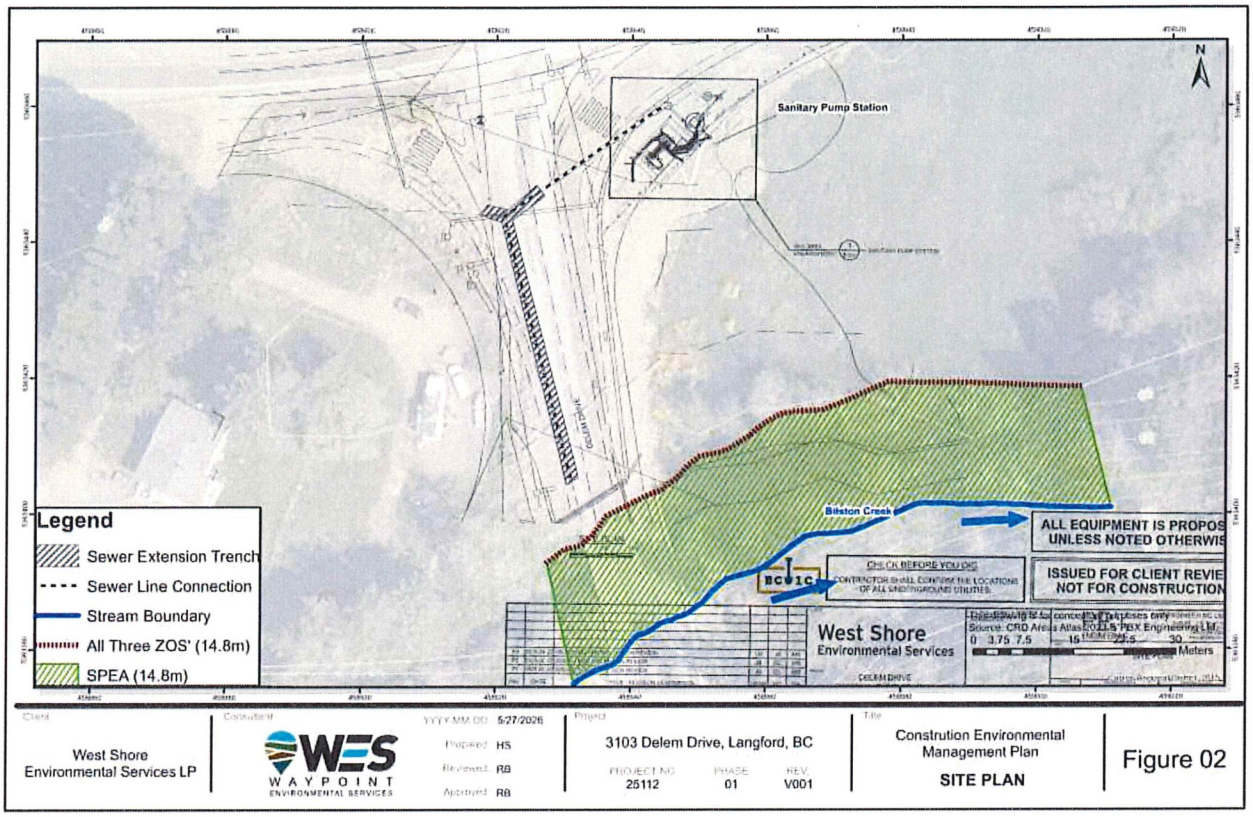

Figure 2: Site Plan with SPEA boundary

3.0 REGULATORY FRAMEWORK

Legislation referenced within and used to develop the CEMP includes, but is not limited to:

- Canada Fisheries Act.
- Canada Migratory Birds Convention Act.
- Canada Species at Risk Act.
- Canadian Environmental Protection Act.
- British Columbia (BC) Environmental Management Act.
- BC Spill Reporting Regulation.
- BC Fish Protection Act.
- BC Environmental Management Act.
- BC Contaminated Sites Regulation.
- BC Hazardous Waste Regulation.

- BC Water Quality Guidelines.
- BC Water Sustainability Act.
- BC Weed Control Act.
- BC Wildlife Act.
- WorkSafe BC Occupational Health and Safety Regulation

4.0 BEST MANAGEMENT PRACTICES

This section presents the recommended mitigation measures and BMPs to be implemented during the Construction Works to help prevent or reduce potential impacts to the riparian area adjacent to Bilston Creek. These measures generally follow the guidelines and BMPs below:

- BC Ministry of Environment. *Develop with Care: Environmental Guidelines for Urban and Rural Land Development in British Columbia*. 2014.
- BC Ministry of Environment. *Standards and Best Practices for Instream Works*. 2004.
- BC Ministry of Transportation and Infrastructure. *Erosion and Sediment Control Handbook*. 2015.
- Government of British Columbia. *Water Sustainability Act – Changes in and About a Stream*. Updated 2024.
- BC Ministry of Environment. *Best Management Practices for Amphibians and Reptiles in Urban and Rural Environments in British Columbia*. 2014.
- Fisheries and Oceans Canada. *Measures to Protect Fish and Fish Habitat (Projects Near Water)*. Updated 2022.

5.0 ENVIRONMENTAL ROLES AND RESPONSIBILITIES

This section of the CEMP describes the roles and responsibilities for the Construction Works for implementing, inspecting, and reporting on environmental protection and mitigation measures.

The contractor(s) have yet to be determined. It is the responsibility of the contractors and subcontractors to ensure their employees and subcontractors are familiar with and comply with the contents of this CEMP. The EM and/or QEP will provide an environmental orientation and training regarding the CEMP, prior to commencement of the Construction Works.

All Contractors have an inherent responsibility for the protection of environmental, socio-economic, and heritage values in their work. Members of the project team and those identified

within each contractor's organization have professional responsibilities for environmental management. These are outlined below.

Table 5.0.1 Roles and Responsibilities

Role	Responsibilities
Client	• Ensure overall compliance with permits, approvals, and authorizations under provincial and federal legislation. • Retain qualified environmental professionals to prepare and oversee implementation of the CEMP. • Ensure contractors are aware of and adhere to environmental requirements.
Contractors and subcontractors	• Develop and implement environmental protection measures and plans relevant to their scope of work. • Comply with all applicable legislative and regulatory requirements, including permits and approvals. • Implement contract specifications, BMPs, and permitting requirements as applicable. • Promptly report and document all environmental incidents. • Address and correct any identified deficiencies in a timely manner. • Routinely inspect and maintain all equipment to ensure proper function and compliance. • Ensure that hazardous materials are handled only by personnel who have received appropriate training. • Provide spill kits for all equipment operating on-site. • Deliver adequate training to personnel on how to respond to environmental incidents. • Minimize environmental disturbances to the extent necessary to complete the planned work. • Take all reasonable precautions to avoid adverse impacts on the natural environment. • Ensure all waste and surplus materials generated by the project are managed and disposed of in accordance with applicable laws and regulations. • Leave completed work areas in a safe, clean, and environmentally stable condition.
EM and/or QEP	• Has the authority to halt construction activities if they are causing, or are at risk of causing, unacceptable environmental harm. • Conducts routine Site inspections and monitors key environmental indicators to assess compliance with the CEMP, as well as applicable provincial and federal permits, approvals, guidelines, and regulations. • Identifies and monitors any existing or potential environmental issues on-Site. • Prepares daily and monthly environmental monitoring reports documenting observations, compliance status, and any required corrective actions. • Provides technical advice and recommendations to the contractor on environmental aspects of the project, including but not limited to erosion and sediment control and the handling and transport of soil. • Maintains an on-site presence and remains on-call during periods of heightened environmental sensitivity or when work poses an increased risk to the environment.

WAYPOINT ENVIRONMENTAL SERVICES

6.0 ENVIRONMENTAL MONITORING

Environmental monitoring will be undertaken to ensure that all works are completed in compliance with the conditions of the Water Sustainability Act (WSA) Section 11 authorization, applicable legislation, and this CEMP. The primary focus will be on preventing sedimentation, protecting the riparian area, and ensuring compliance with Site-specific best management practices (BMPs).

6.1 Environmental Monitor Role

A QEP will serve as the EM for the duration of construction activities adjacent to the SPEA. The EM will:

- Conduct regular inspections during Site preparation, excavation, pump station installation, sewer connection/extension, and final Site restoration.
- Confirm installation and maintenance of ESC measures.
- Monitor construction practices to ensure no unauthorized disturbance to vegetation or soils outside the approved work area.
- Observe weather and Site conditions to identify elevated environmental risk and adjust monitoring frequency accordingly.
- Document all inspections and provide monitoring reports to the Client and regulatory agencies as required.
- Immediately notify the Client and contractor if work is observed that may cause environmental harm and recommend corrective actions.

6.2 Monitoring Frequency

Exact frequency will be determined by the QEP based on project construction activities and levels of precipitation during the project work. In general, the following will be required:

- *Baseline Inspection:* Prior to commencement of work to confirm Site readiness and ESC installation.
- *Active Construction:* At least weekly during excavation and installation activities within or adjacent to the SPEA.
- *Post-Storm Events:* Additional inspections following rainfall events ≥ 10 mm in 24 hours.
- *Post-Construction*: A final inspection to confirm proper Site stabilization, slope protection, and ESC removal once the area is stable.
- *Adaptive Management:* Monitoring frequency and methods may be adjusted in response to project-specific conditions, environmental sensitivity, and seasonal factors.

6.3 Reporting

The EM will prepare concise monitoring reports including:

- Date, time, and weather conditions.
- Work activities observed.
- Condition and effectiveness of ESC measures.
- Any environmental incidents, non-compliance observations, and corrective actions taken.
- Photographic documentation of key areas and features.

Reports will be provided to the Client and retained as part of the project's environmental record.

7.0 ENVIRONMENTAL PROTECTION MEASURES

The following sections outline the environmental protection measures to be implemented during construction of the pump station and sewer extension. These measures will be incorporated into the Environmental Protection Plan (EPP) to be prepared and finalized by the QEP and will be refined to reflect Site conditions and permit requirements. The intent is to ensure that construction activities are conducted in a manner that protects the riparian area, minimizes disturbance, and complies with applicable legislation and approvals.

7.1 Erosion and Sediment Controls

- Limit work to days with little or no rainfall, where possible.
- Install silt fencing downslope of disturbed areas prior to excavation to prevent sediment migration toward Bilston Creek.
- Install sediment filter cloth in any catch basins located down-gradient of the sewer extension trenching.
- Sweep asphalt surfaces of errant dirt/dust.
- Stabilize stockpiled soils away from the SPEA using tarps or temporary seeding.
- Apply topsoil and hydroseed to disturbed slopes immediately following construction to promote rapid vegetative cover.
- Inspect and maintain ESC measures daily during active construction and after rainfall events ≥10 mm in 24 hours.
- Remove ESC measures only after the EM confirms Site stabilization.

7.1.1 Stormwater Management Plan

During construction, stormwater and groundwater that accumulate in the pump station and/or sewer extension excavation may require pumping to maintain dry working conditions.

Management of this water will follow best practices to prevent sediment or contaminants from entering Bilston Creek or adjacent riparian areas.

Measures include:

- *Discharge Location*: Stormwater and groundwater will be discharged to stable, permeable ground surfaces near the Site, located outside the SPEA wherever practicable.
- *Water Quality Protection*: Prior to discharge, water will be visually inspected to ensure it is free of visible sediment, hydrocarbons, or other deleterious substances. If needed, treatment will include filtration through filter bags, settling tanks, or equivalent sediment control measures.
- *Erosion Control*: Discharge points will be protected with energy dissipation measures (e.g., riprap pads, straw bales, or geotextile diffusion) to prevent scouring and erosion.
- *Containment of Flow*: Discharge will be directed away from surface flow paths that could connect to Bilston Creek. No direct discharge to the creek or riparian drainage channels will occur.
- *Monitoring*: The EM will inspect discharge locations during dewatering to confirm water quality protection and erosion control measures are effective. Additional controls will be implemented if signs of sedimentation, erosion, or unintended flow toward Bilston Creek are observed.

7.2 Vegetation and Riparian Protection

- Clearly delineate limits of disturbance with flagging or temporary fencing prior to construction.
- Maintain a minimum 5m buffer between construction activities and riparian vegetation outside the approved work zone.
- If applicable, Install high-visibility fencing around tree protection zones to prevent compaction or damage to roots and trunks.
- Avoid unnecessary removal of vegetation; trim rather than remove where possible.

7.3 Wildlife and Nesting Birds

- If clearing or vegetation disturbance occurs during the breeding bird window (generally March 1–August 31), a QEP will conduct a nest survey within five days prior to work.
- Any active nests encountered will be flagged and protected with an appropriate buffer until fledging is complete, in accordance with the BC Wildlife Act and the Migratory Birds Convention Act.

WAYPOINT ENVIRONMENTAL SERVICES

7.4 Spill Prevention and Response

- Always maintain fully stocked spill kits, including in all heavy equipment operating on-Site.
- Designate a refueling area at least 30 m from Bilston Creek and any drainage features, equipped with secondary containment.
- Inspect equipment daily for leaks prior to use; repair leaks immediately before resuming operation.
  In the event of a spill, immediately stop the source, contain the release, notify the EM, and follow spill response procedures.

Section 9 below outlines the Spill Prevention and Response Measures in greater detail.

7.5 Waste Management

- Collect and store all construction waste in secure, covered containers prior to off-Site disposal at an approved facility.
- Segregate hazardous waste and handle according to applicable regulations.
- Manage excavated soil to prevent erosion or sediment release; dispose of surplus material in accordance with provincial soil relocation requirements.
- Remove all construction debris from the Site upon completion of works.

8.0 SITE ACCESS AND STAGING

- Primary Access: construction access will be from Delem Drive, entering directly into the work zone at the west corner of Delem Drive and Sooke Road.
- Staging Area: equipment and materials will be staged in the designated laydown area shown on project drawings, located outside the SPEA and away from Bilston Creek.
- Environmental Protection in staging area:
  - Ground protection measures (e.g., timber mats or gravel surfacing) will be used if needed to prevent rutting and sediment tracking.
  - Spill kits will be placed in the staging area and at all fueling locations.
- Vehicle and Equipment Washing: All machinery will arrive on-Site free of invasive plant material and excessive soil. If cleaning is required, it will occur off-Site or in a designated contained wash area.
- Worker Parking: parking will be limited to designated areas to prevent congestion and minimize disturbance to surrounding vegetation and soils.

WAYPOINT ENVIRONMENTAL SERVICES

9.0 SPILL PREVENTION AND RESPONSE

It is the contractor's responsibility, with guidance from the EM, to minimize the potential for hydrocarbon spills or releases of hazardous materials into the surrounding environment. This section outlines the BMPs for spill prevention and response.

9.1 Spill Prevention Measures

- Inspect all equipment daily prior to use to ensure it is clean, free of leaks, and in good working order.
- Document equipment inspections in daily health, safety, and environmental records.
- Store portable fuel tanks within appropriate secondary containment.
- Maintain spill kits at all fueling and equipment storage locations, as well as in each piece of heavy equipment.
- Conduct fueling and maintenance at least 30 m from Bilston Creek and drainage pathways wherever practicable.
- Ensure all personnel handling fuels or hazardous materials have appropriate training.
- Immediately contain and clean up minor leaks or drips using absorbent pads; dispose of materials in accordance with regulations.
- Keep a minimum of 20 kg absorbent material, 20 kg rags, and 100 m absorbent boom on-Site.

9.2 Spill Response Procedure

In the event of a spill, construction personnel will follow the steps below. Work will not resume until emergency actions are complete and the Client Representative authorizes continuation.

1. **Ensure Safety**
    - Prioritize personal and public safety.
    - Don appropriate PPE.
    - Warn others in the area and eliminate ignition sources.
2. **Stop the Flow**
    - Shut down valves, pumps, or leaking equipment.
    - Plug or contain the source.

3. **Secure the Area**
    - Restrict access to the spill site.
4. **Contain the Spill**
    - On land: protect drains, culverts, and Bilston Creek using absorbent pads, booms, or temporary dykes.
    - Make every effort to prevent migration toward riparian or aquatic areas.
5. **Identify the Source**
    - Record the type and estimated volume of material released.
6. **Notify**
    - Immediately inform the Site Supervisor and EM.
    - The EM will coordinate notification to the Client and regulatory agencies, as required.
7. **Clean-Up**
    - Collect contaminated soils, absorbents, and materials for disposal at an approved facility.
    - Follow the BC *Environmental Management Act* and Waste Management regulations.
8. **Investigate**
    - Determine cause and contributing factors.
9. **Report**
    - Prepare a written spill report within 24 hours including:
        - Contact information for reporters and parties involved.
        - Location, time, type, and volume of spill.
        - Environmental effects and corrective actions taken.

WAYPOINT ENVIRONMENTAL SERVICES

9.3 Spill Reporting

In the event of a spill, the following actions must be taken to ensure proper notification and documentation:

- The individual who observes the spill must notify the EM as soon as possible.
- The EM, in coordination with the contractor, will be responsible for notifying the appropriate regulatory agencies.
- All spills, regardless of quantity, must be documented in the EM's monitoring report.
- All spills to water are considered reportable incidents.
- Spills that exceed the reportable quantities outlined in the Spill Reporting Regulation under the Environmental Management Act (EMA) must be reported to the Ministry of Emergency Management and Climate Readiness (EMCR).

The reportable quantities of spilled substances are detailed below.

Table 9.3.1 Reportable Substances

Substance	Amount	Reportable To
Fuels, oils, and lubricants	>100 L or any amount to aquatic habitat	EMCR 1 800 663 3456 DFO 1 800 465 4336
Oils with >50 ppm PCB	>1 L	EMCR
Corrosives, acids	>5 L and/or 5 kg	EMCR
Hazardous materials	>5 L	EMCR
Other substances that could cause pollution defined under the BC EMA	>200 kg	EMCR

10.0 ADAPTIVE MANAGEMENT AND CONTINUOUS IMPROVEMENT

As an adaptive management strategy, this CEMP will be reviewed and updated prior to and during construction, where necessary.

Prior to finalization, mitigation measures and Site-specific details will be refined to reflect the most current project design, permit conditions, and pre-clearing surveys (if applicable). Updates may also be informed by additional direction received from the Client, the EM, the BC Ministry of Water, Land and Resource Stewardship, Fisheries and Oceans Canada (DFO), and other relevant regulatory agencies.

The effectiveness of mitigation will be evaluated during construction by the EM and other on-Site personnel. Based on field observations, corrective or preventative actions may be recommended, and the CEMP will be updated as required.

This review and amendment process will be used to revise and improve the environmental management program, ensuring regulatory compliance, permit adherence, and ongoing improvement. Mitigation and monitoring requirements will be re-evaluated throughout construction to address potential deficiencies and strengthen environmental protection.

11.0 REFERENCES

BC Ministry of Environment. *Develop with Care: Environmental Guidelines for Urban and Rural Land Development in British Columbia*. 2014.

BC Ministry of Environment. *Standards and Best Practices for Instream Works*. 2004.

BC Ministry of Transportation and Infrastructure. *Erosion and Sediment Control Handbook*. 2015.

BC Ministry of Environment. *Best Management Practices for Amphibians and Reptiles in Urban and Rural Environments in British Columbia*. 2014.

Fisheries and Oceans Canada. *Measures to Protect Fish and Fish Habitat (Projects Near Water)*. Updated 2022.

Government of British Columbia. *Water Sustainability Act – Changes in and About a Stream*. Updated 2024.

Government of British Columbia. *Riparian Areas Protection Regulation (RAPR)*. Consolidated 2016, current to 2024.

Government of British Columbia. *Environmental Management Act* and *Spill Reporting Regulation*. Current to 2024.

Government of Canada. *Migratory Birds Convention Act*. 1994 (current consolidation).

Government of British Columbia. *Wildlife Act*. Current to 2024.

12.0 LIMITATIONS AND CONDITIONS

This report was prepared by Waypoint Environmental Services Ltd. (WES) for the exclusive use of the Client and for the specific site, dates, and scope described. The conclusions and recommendations reflect conditions observed during the assessment period and are based on information available at the time of reporting.

Complete Report

This report must be read as a whole. Figures, tables, appendices, or excerpts should not be used or relied upon independently. All documents, data, records, and files transmitted by WES as part of this assignment collectively form the complete report.

Basis of the Report

The findings and recommendations apply only to the site and purposes for which this report was completed, and only to conditions that existed at the time of the assessment. Environmental and subsurface conditions may vary across a property and may change over time. Additional investigation may be required if site conditions, land use, or development plans change.

Third-Party Information

Where information was provided to WES by third parties, it has been assumed to be accurate unless otherwise stated. WES does not guarantee the completeness or reliability of third-party information.

Use and Reliance

This report is intended solely for the Client. No other party may use or rely on this report, in whole or in part, without written authorization from WES. Any unauthorized use is at the sole risk of the user. WES accepts no responsibility for damages or losses suffered by third parties as a result of unauthorized use or interpretation of this report.

Standard of Care

Services were performed in accordance with the level of skill and care ordinarily exercised by competent environmental professionals practicing under similar conditions in British Columbia at the time the work was completed. No other warranty, express or implied, is provided.

Appendix A – Previous Reports

FORM 1

Riparian Areas Regulation - Qualified Environmental Professional - Assessment Report

Riparian Areas Regulation: Assessment Report

Please refer to submission instructions and assessment report guidelines when completing this report.

Date: 2018-04-10

I. Primary QEP Information

First Name	Thomas	Middle Name		
Last Name	Roy			
Designation	R.P. Bio	Company	Cascadia Biological Services	
Registration #	1089	Email	cascadiabiolgical@shaw.ca	
Address	772 Goldstream Avenue			
City	Victoria	Postal/Zip	V9B 5S4	Phone # 250 888-4864
Prov/state	BC	Country	Canada	

II. Secondary QEP Information (use **Form 2** for other QEPs)

First Name		Middle Name	
Last Name			
Designation		Company	
Registration #		Email	
Address			
City		Postal/Zip	Phone #
Prov/state		Country	

III. Developer Information

First Name	Seamus	Middle Name	
Last Name	Brennan		
Company	Centre Mountain Industrial Property Lands (CMIPL)		
Phone #	(250) 882-0882	Email	seamus.brennan@tfirma.ca
Address	#116 -967 Langford Parkway		
City	Langford	Postal/Zip	V9B 0A5
Prov/state	BC	Country	Canada

IV. Development Information

Development Type	Other: Forestry harvest/logging operation		
Area of Development (ha)	60	Riparian Length (m)	2351
Lot Area (ha)	80	Nature of Development	New
Proposed Start Date	2018-04-15	Proposed End Date	2019-12-31

V. Location of Proposed Development

Street Address (or nearest town)	City of Langford – 2965 Sooke Road et al.						
Local Government	Bilston Creek and Metchosin Creek and Unnamed Tributaries			City	Victoria		
Stream Name	Unnamed Creek						
Legal Description (PID)	030095891/030095883/001703374 001703251/001703277/001703285			Region	Capital		
Stream/River Type	Stream			DFO Area	South Coast		
Watershed Code	930-027500, 920-027500 and unnamed tributaries						
Latitude	48	25	08	Longitude	123	33	31

Completion of Database Information includes the Form 2 for the Additional QEPs, if needed. Insert that form immediately after this page.

Table of Contents for Assessment Report

Page Number

1. Description of Fisheries Resources Values .....

2. Results of Riparian Assessment (SPEA width) .....

3. Site Plan .....

4. Measures to Protect and Maintain the SPEA
   (detailed methodology only).
   1. Danger Trees.....
   2. Windthrow.....
   3. Slope Stability.....
   4. Protection of Trees.....
   5. Encroachment .....
   6. Sediment and Erosion Control.....
   7. Floodplain.....
   8. Stormwater Management.....

5. Environmental Monitoring .....

6. Photos .....

7. Assessment Report Professional Opinion .....

Section 1. Description of Fisheries Resources Values and a Description of the Development proposal

(Provide as a minimum: Species present, type of fish habitat present, description of current riparian vegetation condition, connectivity to downstream habitats, nature of development, specific activities proposed, timelines)

The purpose of this report is to identify watercourses and associated RAR setbacks for the proposed Centre Mountain Industrial Park (CMIP). The first phase of this project will involve logging the majority of the 60 hectares outside of the Streamside Protection and Enhancement Area (SPEA). The CMIP project is an amalgamation of six separate legal properties which have come together to form part of this development. Proposed structures beyond the first phase of this development that are proposed within the Riparian Assessment Area (RAA) and outside of the SPEA will be dealt with by the submission of separate reports for each of the 6 identified lots. At the time of our assessment in January through March of 2018, there was six distinct streams within the subject lots that met the definition of a watercourse as identified by the Fish-Stream Identification Guidebook (1998). The six streams include Bilston Creek as well as Metchosin Creek including several unnamed tributaries to those watercourses

The proposed delineated study area encompasses one larger 4th order watercourse as well as a 3rd order watercourse through the subject properties. Please refer to select maps in Section 3 of this report for watercourse locations. The first watercourse is Bilston Creek that runs along the northern border of the site from west to east. It is referred to as Stream #1. Stream #1 is a moderately large stream ranging in width from 6-10m with an average gradient of 5% resulting in cascade-pool morphology. The designated Streamside Protection and Enhancement Area (SPEA) for this creek will be 25.83m. Stream #2 is a 1st order tributary to Bilston Creek. The stream flows from south to north and has an average bankfull width of less than 3m. The stream gradient at this location was approximately 10%. This results in a step-pool morphology having designated SPEA's of 10m. Note: Stream #3 was deleted from this report as it was found to be on a property outside of the designated study area. The second major watercourse is Metchosin Creek (Stream #4) which is a third order tributary to Bilston Creek. It runs along and is mainly outside of the south boundary of the study area. A large wetland is the primary headwater for Metchosin Creek. There are two reaches for this watercourse although only the headwater reach affects the study area. The designated SPEA or this wetland will be 15m along the northern, eastern and western perimeter and a 30m setback along the southern boundary. Stream #5 is a 2nd order tributary to Metchosin Creek that flows from north to south along the western boundary of the site. The SPEA for this wetland will be as described for the wetland for Stream #4. Stream #6 is a 1st order direct tributary flowing north to south to Metchosin Creek and is located along the western boundary of the study area. With an average channel width of 1.85m and an average gradient of 5%, the stream is considered to have cascade-pool morphology. The SPEA for this stream will be 10m. Stream #7, a second order stream, is located along the eastern boundary of the study area. It is a tributary to Metchosin Creek. Consisting of two reaches, the first is a stream segment with an average channel width of 2.51m and an average gradient of 6%. This results in a stream morphology classified as cascade-pool. The resulting SPEA for Reach 1 of Stream #7 is 10m. Reach 2 of Stream #7 is a headwater wetland that straddles the mid eastern boundary of the study area. The designated SPEA for this wetland is 15m along the northern, eastern and western boundaries of the wetland. A 30m SPEA will be designated for the southern boundary of the wetland. Overall, the primary vegetation within the subject property consists of older second-generation forests with cedar, maple and alder forming the majority of the vegetation within the SPEA. Upland vegetation consists primarily of Douglas fir, arbutus, and the occasional Gary oak. Overall canopy closure was found to be in a winter range of 45%-75%. Substrate along both the third and fourth order streams consisted primarily of cobble with lesser amounts of gravel and fines. Along the smaller streams, gravel including fines and mineral alluvium were the primary substrate. In all streams, occasional bedrock outcrops were found along select sections of each reach. For

the purpose of this report, all waterbodies are considered fish bearing by default as no obstructions to the upstream movement of fish have been observed.

Section 2. Results of Riparian Assessment (SPEA width)

2. Results of Detailed Riparian Assessment

Refer to Chapter 3 of Assessment Methodology

Date: 2018-04-10

Description of Water bodies involved (number, type): 6 streams

Stream	1
Wetland	
Lake	
Ditch	
Number of reaches	1
Reach #	1

Channel width and slope and Channel Type (use only if water body is a stream or a ditch, and only provide widths if a ditch)

	Channel Width(m)		Gradient (%)
starting point	9.76		
upstream	10.78	high	3
	7.56		
	9.23		
	9.34		
downstream	7.76		
	5.62	low	
	8.33		
	8.42		
	8.17		7
	8.73		
Total: minus high /low	77.50		
mean	8.61		5

	R/P	C/P	S/P
Channel Type		X	

I, Thomas Roy, hereby certify that:
a) I am a qualified environmental professional, as defined in the Riparian Areas Regulation made under the *Fish Protection Act*;
b) I am qualified to carry out this part of the assessment of the development proposal made by the developer CMIPL ;
c) I have carried out an assessment of the development proposal and my assessment is set out in this Assessment Report; and
d) In carrying out my assessment of the development proposal, I have followed the assessment methods set out in the Schedule to the Riparian Areas Regulation.

Site Potential Vegetation Type (SPVT)

	Yes	No	
SPVT Polygons		X	Tick yes only if multiple polygons, if No then fill in one set of SPVT data boxes

I, Thomas Roy, hereby certify that:
a) I am a qualified environmental professional, as defined in the Riparian Areas Regulation made under the *Fish Protection Act*;
b) I am qualified to carry out this part of the assessment of the development proposal made by the developer CMIPL ;
c) I have carried out an assessment of the development proposal and my assessment is set out in this Assessment Report; and
d) In carrying out my assessment of the development proposal, I have followed the assessment methods set out in the Schedule to the Riparian Areas Regulation.

Polygon No: 1

	LC	SH	TR
SPVT Type			X

Method employed if other than TR

Polygon No:

Method employed if other than TR

	LC	SH	TR	
SPVT Type				

Polygon No:		
SPVT Type		Method employed if other than TR

Zone of Sensitivity (ZOS) and resultant SPEA

Segment No:	1	If two sides of a stream involved, each side is a separate segment. For all waterbodies multiple segments occur where there are multiple SPVT polygons					
LWD, Bank and Channel Stability ZOS (m)	15						
Litter fall and insect drop ZOS (m)	15						
Shade ZOS (m) max	25.83	South bank	Yes		No	X	
Ditch	Justification description for classifying as a ditch (manmade, no significant headwaters or springs, seasonal flow)						
Ditch Fish Bearing	Yes		No		If non-fish bearing insert no fish bearing status report		
SPEA Maximum	**25.83**	(For ditch use table3-7)					

Segment No:	2	If two sides of a stream involved, each side is a separate segment. For all water bodies multiple segments occur where there are multiple SPVT polygons					
LWD, Bank and Channel Stability ZOS (m)	15						
Litter fall and insect drop ZOS (m)	15						
Shade ZOS (m) max	25.83	South bank	Yes	X	No		
SPEA maximum	**25.83**	(For ditch use table3-7)					

Segment No:		If two sides of a stream involved, each side is a separate segment. For all water bodies multiple segments occur where there are multiple SPVT polygons					
LWD, Bank and Channel Stability ZOS (m)							
Litter fall and insect drop ZOS (m)							
Shade ZOS (m) max		South bank	Yes		No		
SPEA Maximum		(For ditch use table3-7)					

I, Thomas Roy, hereby certify that:

a) I am a qualified environmental professional, as defined in the Riparian Areas Regulation made under the *Fish Protection Act*;
b) I am qualified to carry out this part of the assessment of the development proposal made by the developer ; CMIPL
c) I have carried out an assessment of the development proposal and my assessment is set out in this Assessment Report; and
d) In carrying out my assessment of the development proposal, I have followed the assessment methods set out in the Schedule to the Riparian Areas Regulation.

Comments

Segment 1 represents the left bank facing downstream.

2. Results of Detailed Riparian Assessment

Refer to Chapter 3 of Assessment Methodology

Date: 2018-04-10

Description of Water bodies involved (number, type): 6 streams

Stream	2
Wetland	
Lake	
Ditch	
Number of reaches	1
Reach #	1

Channel width and slope and Channel Type (use only if water body is a stream or a ditch, and only provide widths if a ditch)

	Channel Width(m)		Gradient (%)
starting point	2.0		
upstream	2.5		
	4.0	high	8
	3.1		
	2.2		
downstream	1.8		
	1.3	low	
	1.5		12
	2.0		
	2.4		
	2.0		
Total: minus high /low	19.5		
mean	2.17		10

	R/P	C/P	S/P
Channel Type			X

I, Thomas Roy, hereby certify that:
e) I am a qualified environmental professional, as defined in the Riparian Areas Regulation made under the *Fish Protection Act*;
f) I am qualified to carry out this part of the assessment of the development proposal made by the developer CMIPL ;
g) I have carried out an assessment of the development proposal and my assessment is set out in this Assessment Report; and
h) In carrying out my assessment of the development proposal, I have followed the assessment methods set out in the Schedule to the Riparian Areas Regulation.

Site Potential Vegetation Type (SPVT)

	Yes	No
SPVT Polygons		X

Tick yes only if multiple polygons, if No then fill in one set of SPVT data boxes

I, Thomas Roy, hereby certify that:
e) I am a qualified environmental professional, as defined in the Riparian Areas Regulation made under the *Fish Protection Act*;
f) I am qualified to carry out this part of the assessment of the development proposal made by the developer CMIPL ;
g) I have carried out an assessment of the development proposal and my assessment is set out in this Assessment Report; and
h) In carrying out my assessment of the development proposal, I have followed the assessment methods set out in the Schedule to the Riparian Areas Regulation.

Polygon No: 1

	LC	SH	TR
SPVT Type			X

Method employed if other than TR

Polygon No:

	LC	SH	TR
SPVT Type			

Method employed if other than TR

Polygon No:		Method employed if other than TR
SPVT Type		

Zone of Sensitivity (ZOS) and resultant SPEA

Segment No:	1	If two sides of a stream involved, each side is a separate segment. For all waterbodies multiple segments occur where there are multiple SPVT polygons
LWD, Bank and Channel Stability ZOS (m)	10	
Litter fall and insect drop ZOS (m)	10	
Shade ZOS (m) max	6.5	South bank: Yes [ ] No [X]
Ditch	Justification description for classifying as a ditch (manmade, no significant headwaters or springs, seasonal flow)	
Ditch Fish Bearing	Yes [ ] No [ ]	If non-fish bearing insert no fish bearing status report
SPEA Maximum	**10**	(For ditch use table3-7)

Segment No:	2	If two sides of a stream involved, each side is a separate segment. For all water bodies multiple segments occur where there are multiple SPVT polygons
LWD, Bank and Channel Stability ZOS (m)	10	
Litter fall and insect drop ZOS (m)	10	
Shade ZOS (m) max	6.5	South bank: Yes [ ] No [X]
SPEA maximum	**10**	(For ditch use table3-7)

Segment No:		If two sides of a stream involved, each side is a separate segment. For all water bodies multiple segments occur where there are multiple SPVT polygons
LWD, Bank and Channel Stability ZOS (m)		
Litter fall and insect drop ZOS (m)		
Shade ZOS (m) max		South bank: Yes [ ] No [ ]
SPEA Maximum		(For ditch use table3-7)

I, Thomas Roy, hereby certify that:

e) I am a qualified environmental professional, as defined in the Riparian Areas Regulation made under the *Fish Protection Act*;
f) I am qualified to carry out this part of the assessment of the development proposal made by the developer CMIPL
g) I have carried out an assessment of the development proposal and my assessment is set out in this Assessment Report; and
h) In carrying out my assessment of the development proposal, I have followed the assessment methods set out in the Schedule to the Riparian Areas Regulation.

Comments

Segment 1 represents the left bank facing downstream. As the SPEA minimum is 10m, all three ZOS on the SPEA map have been shown as 10m.

2. Results of Detailed Riparian Assessment

Refer to Chapter 3 of Assessment Methodology

Date: 2018-04-10

Description of Water bodies involved (number, type): 6 streams

Stream	
Wetland	4
Lake	
Ditch	
Number of reaches	1
Reach #	1

Channel width and slope and Channel Type (use only if water body is a stream or a ditch, and only provide widths if a ditch)

	Channel Width(m)	Gradient (%)
starting point		
upstream		
downstream		
Total: minus high /low		
mean		

I, Thomas Roy, hereby certify that:
- i) I am a qualified environmental professional, as defined in the Riparian Areas Regulation made under the *Fish Protection Act*;
- j) I am qualified to carry out this part of the assessment of the development proposal made by the developer CMIPL ;
- k) I have carried out an assessment of the development proposal and my assessment is set out in this Assessment Report; and
- l) In carrying out my assessment of the development proposal, I have followed the assessment methods set out in the Schedule to the Riparian Areas Regulation.

	R/P	C/P	S/P
Channel Type			

Site Potential Vegetation Type (SPVT)

	Yes	No	
SPVT Polygons		X	Tick yes only if multiple polygons, if No then fill in one set of SPVT data boxes

I, Thomas Roy, hereby certify that:
- i) I am a qualified environmental professional, as defined in the Riparian Areas Regulation made under the *Fish Protection Act*;
- j) I am qualified to carry out this part of the assessment of the development proposal made by the developer CMIPL ;
- k) I have carried out an assessment of the development proposal and my assessment is set out in this Assessment Report; and
- l) In carrying out my assessment of the development proposal, I have followed the assessment methods set out in the Schedule to the Riparian Areas Regulation.

Polygon No: 1

	LC	SH	TR
SPVT Type			X

Method employed if other than TR

Polygon No:

Method employed if other than TR

	LC	SH	TR	
SPVT Type				

Polygon No:		Method employed if other than TR
SPVT Type		

Zone of Sensitivity (ZOS) and resultant SPEA

Segment No:	1	If two sides of a stream involved, each side is a separate segment. For all water bodies multiple segments occur where there are multiple SPVT polygons					
LWD, Bank and Channel Stability ZOS (m)	15						
Litter fall and insect drop ZOS (m)	15						
Shade ZOS (m) max	15	South bank	Yes		No	X	
Ditch	Justification description for classifying as a ditch (manmade, no significant headwaters or springs, seasonal flow)						
Ditch Fish Bearing	Yes		No		If non-fish bearing insert no fish bearing status report		
SPEA Maximum	**15**	(For ditch use table3-7)					

Segment No:		If two sides of a stream involved, each side is a separate segment. For all water bodies multiple segments occur where there are multiple SPVT polygons					
LWD, Bank and Channel Stability ZOS (m)							
Litter fall and insect drop ZOS (m)							
Shade ZOS (m) max		South bank	Yes		No		
SPEA maximum		(For ditch use table3-7)					

Segment No:		If two sides of a stream involved, each side is a separate segment. For all water bodies multiple segments occur where there are multiple SPVT polygons					
LWD, Bank and Channel Stability ZOS (m)							
Litter fall and insect drop ZOS (m)							
Shade ZOS (m) max		South bank	Yes		No		
SPEA Maximum		(For ditch use table3-7)					

I, Thomas Roy, hereby certify that:

i) I am a qualified environmental professional, as defined in the Riparian Areas Regulation made under the *Fish Protection Act*;
j) I am qualified to carry out this part of the assessment of the development proposal made by the developer ; CMIPL
k) I have carried out an assessment of the development proposal and my assessment is set out in this Assessment Report; and
l) In carrying out my assessment of the development proposal, I have followed the assessment methods set out in the Schedule to the Riparian Areas Regulation.

Comments

Segment 1 represents the northern half of the wetland. Only one segment used for this assessment

2. Results of Detailed Riparian Assessment

Refer to Chapter 3 of Assessment Methodology

Date: 2018-04-10

Description of Water bodies involved (number, type): 6 streams

Stream	
Wetland	5
Lake	
Ditch	
Number of reaches	1
Reach #	1

Channel width and slope and Channel Type (use only if water body is a stream or a ditch, and only provide widths if a ditch)

	Channel Width(m)	Gradient (%)
starting point		
upstream		
downstream		
Total: minus high /low		
mean		

	R/P	C/P	S/P
Channel Type			

I, Thomas Roy, hereby certify that:
m) I am a qualified environmental professional, as defined in the Riparian Areas Regulation made under the *Fish Protection Act*;
n) I am qualified to carry out this part of the assessment of the development proposal made by the developer CMIPL ;
o) I have carried out an assessment of the development proposal and my assessment is set out in this Assessment Report; and
p) In carrying out my assessment of the development proposal, I have followed the assessment methods set out in the Schedule to the Riparian Areas Regulation.

Site Potential Vegetation Type (SPVT)

	Yes	No	
SPVT Polygons		X	Tick yes only if multiple polygons, if No then fill in one set of SPVT data boxes

I, Thomas Roy, hereby certify that:
m) I am a qualified environmental professional, as defined in the Riparian Areas Regulation made under the *Fish Protection Act*;
n) I am qualified to carry out this part of the assessment of the development proposal made by the developer CMIPL;
o) I have carried out an assessment of the development proposal and my assessment is set out in this Assessment Report; and
p) In carrying out my assessment of the development proposal, I have followed the assessment methods set out in the Schedule to the Riparian Areas Regulation.

		LC	SH	TR	Method employed if other than TR
Polygon No:	1				
SPVT Type				X	
Polygon No:					Method employed if other than TR

	LC	SH	TR	
SPVT Type				

Polygon No:		Method employed if other than TR
SPVT Type		

Zone of Sensitivity (ZOS) and resultant SPEA

Segment No:	1	If two sides of a stream involved, each side is a separate segment. For all waterbodies multiple segments occur where there are multiple SPVT polygons					
LWD, Bank and Channel Stability ZOS (m)	15						
Litter fall and insect drop ZOS (m)	15						
Shade ZOS (m) max	15	South bank	Yes		No	X	
Ditch	Justification description for classifying as a ditch (manmade, no significant headwaters or springs, seasonal flow)						
Ditch Fish Bearing	Yes		No		If non-fish bearing insert no fish bearing status report		
SPEA Maximum	**15**	(For ditch use table3-7)					

Segment No:		If two sides of a stream involved, each side is a separate segment. For all water bodies multiple segments occur where there are multiple SPVT polygons					
LWD, Bank and Channel Stability ZOS (m)							
Litter fall and insect drop ZOS (m)							
Shade ZOS (m) max		South bank	Yes		No		
SPEA maximum		(For ditch use table3-7)					

Segment No:		If two sides of a stream involved, each side is a separate segment. For all water bodies multiple segments occur where there are multiple SPVT polygons					
LWD, Bank and Channel Stability ZOS (m)							
Litter fall and insect drop ZOS (m)							
Shade ZOS (m) max		South bank	Yes		No		
SPEA Maximum		(For ditch use table3-7)					

I, Thomas Roy, hereby certify that:

m) I am a qualified environmental professional, as defined in the Riparian Areas Regulation made under the *Fish Protection Act*;
n) I am qualified to carry out this part of the assessment of the development proposal made by the developer ; CMIPL
o) I have carried out an assessment of the development proposal and my assessment is set out in this Assessment Report; and
p) In carrying out my assessment of the development proposal, I have followed the assessment methods set out in the Schedule to the Riparian Areas Regulation.

Comments

Segment 1 represents the northern half of the wetland. Only one segment used for this assessment